BALLUFF

sensors worldwide

Industrial Identification

Systems for manufacturing, logistics and distribution

Balluff North America

Florence, Kentucky USA
Balluff's Florence, Kentucky United States headquarters is located just south of Cincinnati, Ohio. Our customers are in industries such as automotive, machine tool, robotics, injection molding, packaging, material handling, and more.

In addition to sales, marketing, and logistic functions, this facility manufactures Micropulse® magnetostrictive linear position sensors and warehouses over 60,000 products.

The Balluff Global Network

Balluff spans the globe with representation in 49 countries.

Argentina
Australia
Austria
Belarus
Belgium
Brazil
Bulgaria
Canada
China
Columbia
Croatia
Czech Republic
Denmark
Finland
France
Great Britain
Greece
Hong Kong
Hungary
India
Indonesia
Iran
Israel
Italy
Japan
Korea
Malaysia
Mexico
Netherlands
Norway
Pakistan
Phillipines
Poland
Portugal
Romania
Russia
Singapore
Slovakia
Slovenia
South Africa
Spain
Sweden
Switzerland
Thailand
Taiwan
Turkey
USA
Venezuela

Electro-magnetic Based Identification **BIS U** 16
865Mhz to 928MHz UHF (Ultra High Frequency) RFID system used for longer range asset tracking, identification and logistics applications.

Inductive Based Identification **BIS M** 30
13.56MHz high frequency RFID system used for general purpose and metal mounted work-in-progress, assembly automation, asset tracking, e-Kanban and inter-logistics applications.

Inductive Based Identification **BIS L** 130
125KHz low frequency RFID system used for specifically for read-only metal mounted work-in-progress and assembly automation.

Inductive Based Identification **BIS C** 180
70KHz and 455KHz dual low frequency RFID system used for Machine Tool ID, read-only or general purpose and metal mounted work-in-progress, assembly automation and asset tracking applications.

Inductive Based Identification **BIS S** 240
560KHz and 3.65MHz dual frequency RFID system used for large capacity memory requirements in general purpose work-in-progress and assembly automation applications.

Machine Vision Identification **BVS** 254
Multi-function machine vision sensors used for measurement and identification of product features, location, orientation and linear or Datamatix bar coding.

Industrial Connectivity 272
Connectivity cabling and power supply products for RFID and Vision Sensor products. Read/write head, bus connection, power connection and specialty cabling options.

Accessories 314
Accessory components for RFID and Vision Sensor products, including mounting brackets and retainers, special assemblies, machine vision lighting, software and service tools.

Technical 354
Technical reference materials for individual RFID system and component requirements.

Alphanumerical directory 386

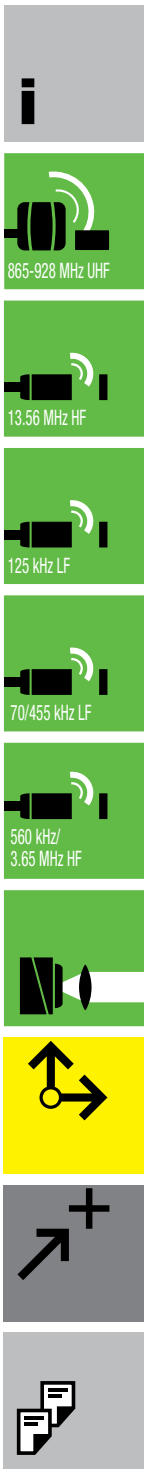

Benefit from comprehensive sensor expertise from a single source. Achieve solutions suited to your requirements.

WARNING

- Read, understand, and follow warnings and manual. Failure to do so could result in serious injury or death.
- NEVER USE AS A SENSING DEVICE FOR PERSONNEL PROTECTION
- Does NOT include self-checking redundancy circuitry required for use in personnel safety applications
- Does NOT meet OSHA and ANSI standards for point-of-operation devices

Balluff, Inc. · www.balluff.com · 1-800-543-8390

Balluff is a Key Player in Your Industry

Every day, Balluff sensors are increasing production throughput and product quality in hundreds of industries all over the world, improving manufacturing processes. We are one of the world's leading sensor manufacturers, providing innovative and practical sensing solutions for a wide range of applications and industries. We offer rugged and reliable products and support, along with unique capabilities that will make an impact on your bottom line as well as your production line.

Rugged Industrial Products

- Hardware is designed with your harsh manufacturing environment in mind
- Products are consistently installed successfully where others have failed
- Real world applications drive our innovation

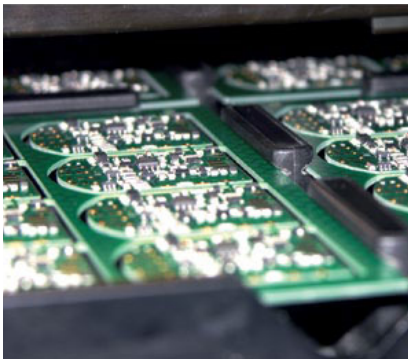

Reliable Products and Support

- Software and firmware are rigorously tested to appropriate agency specifications to ensure complete compatibility
- Products are designed with data reliability as a priority
- A well-educated and technical support staff is available 24/7
- Local premier distributor support

Complete System and Component Supplier

- Industrial identification systems and solution provider
- Network and I/O products, sensors, power supplies and measurement products
- Managed inventory in 4 locations across North America

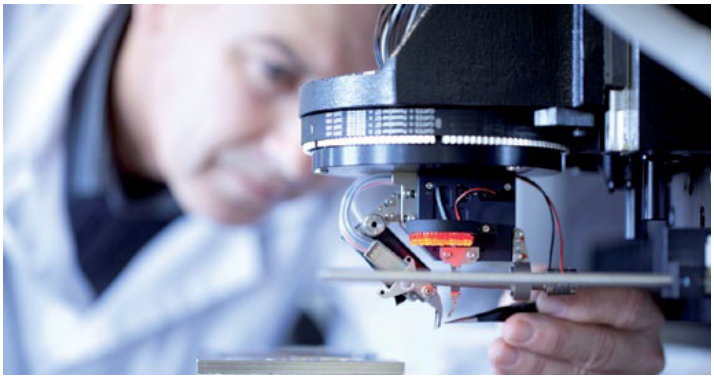

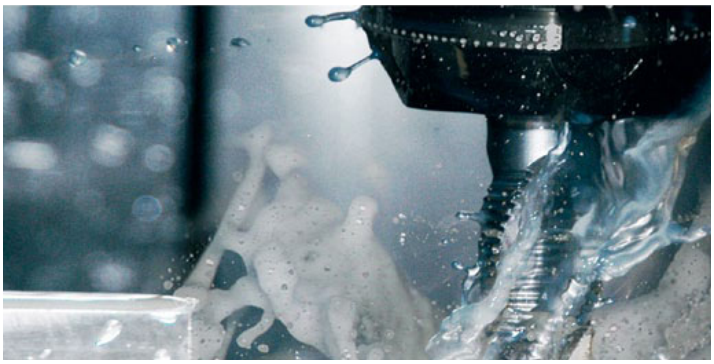

http://www.balluff.com
BALLUFF
sensors worldwide
Home
Latest news
Products
Service
Press centre
Overview
Product news
latest news / product news
mini.s – powerful, compact
Outstanding freedom of design

Conveniently Use the Most Current Data

Information available online all over the world

- Data sheets
- CAD drawings in 2D or 3D
- Catalogs
- Brochures
- Manuals
- Software descriptions
- User's guides
- FAQs
- Worldwide addresses

Products in overview

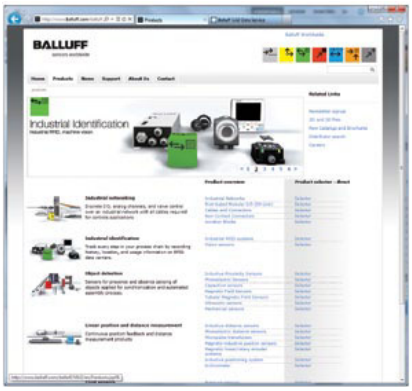

2D and 3D product data

News and events

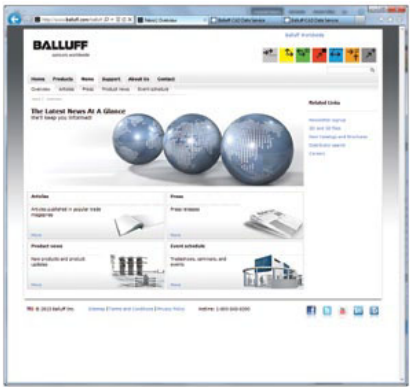

Company information

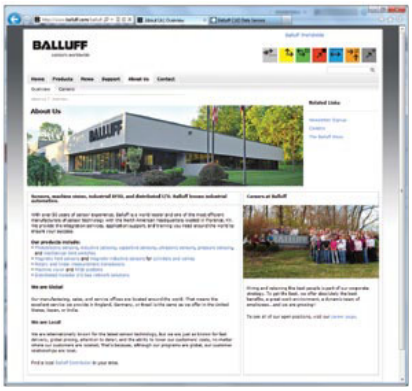

Service and support

We are happy to help

Traceability in Manufacturing

Reach Your Goals with Traceability

Manufacturers are facing ever increasing competitive pressure and legal requirements. The desire for visibility in the process, customer satisfaction, profits and compliance are pushing many manufacturers to look at traceability as a long-term strategy. Manufacturers have discovered that implementing a traceability program is a proven method to meet their strategic goals. With all the possible options, implementing a traceability program is a matter of finding a qualified partner. With access to qualified software and integrator partners, we know what it takes to have a successful implementation…that is, to ensure quality and maximize your return on investment.

Traceability Partner

At Balluff, we have been developing traceability solutions for over 25 years. We were a pioneer in the field of industrial RFID or Radio Frequency Identification with low frequency systems designed specifically for manufacturing. Today, Balluff is still a leader with a full line of Low Frequency (LF), High Frequency (HF) and Ultra High Frequency (UHF) RFID technologies as well as machine vision based stationary measurement and bar-code vision sensors and handhelds. Our experience has enabled us to provide field-proven solutions for traceability in advanced manufacturing facilities.

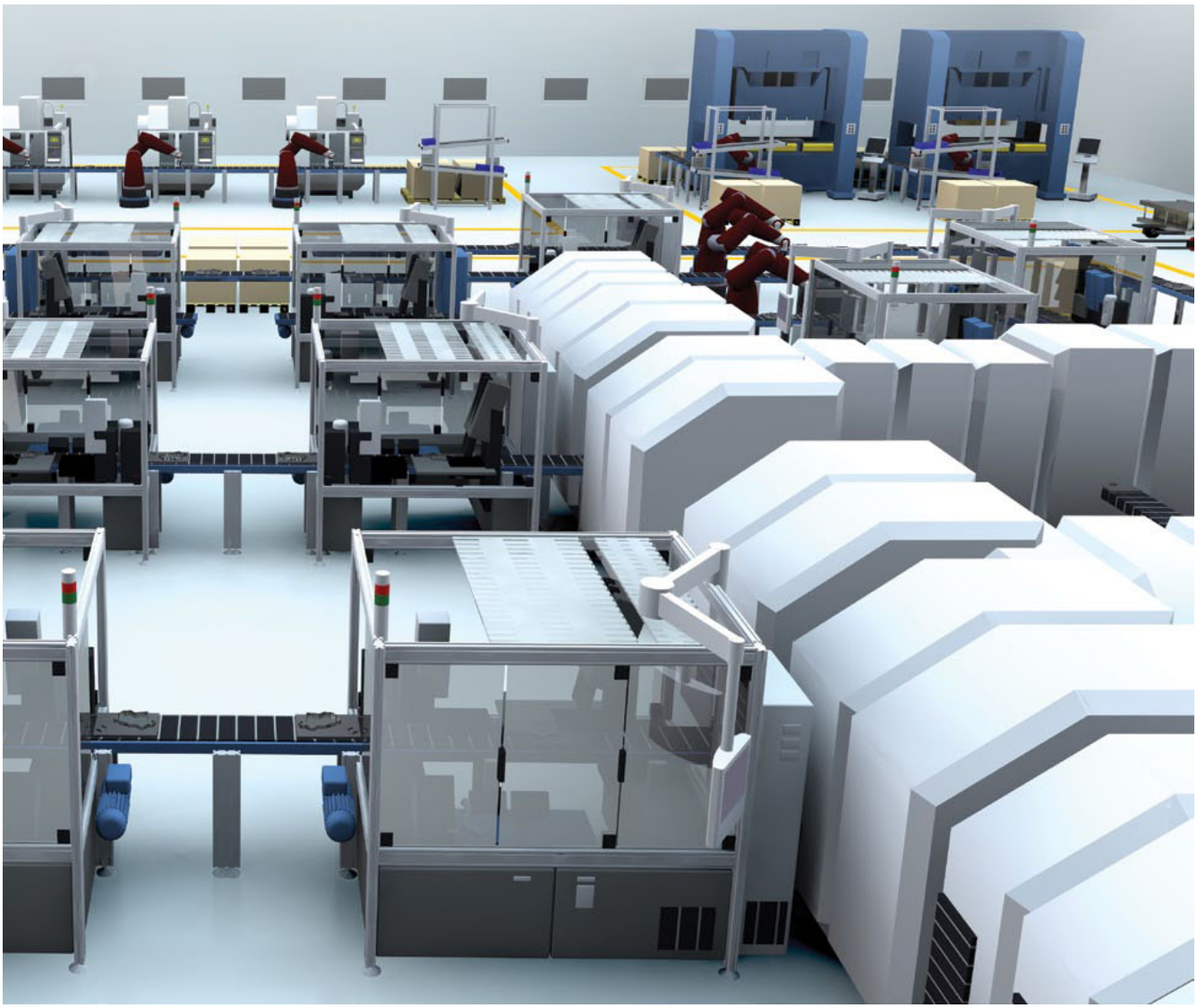

A Multiple Auto-ID Platform Approach
Our systems utilize a multiple platform approach to provide the best solution for integrating traceability into a process. Regardless of the RFID or Vision based tracing technology or controlling system requirements, Balluff has the platform solution. This approach gives our customers the right architecture and communication structures they need.

Traceability Goal
Manufacturers utilize traceability to make improvements in the following areas:

- Provide total process visibility
- Comply with regulatory and quality standards
- Proactively manage product recalls with near-real-time corrective action
- Improve customer safety, customer satisfaction, and profit margin
- Manage product quality and reduce the cost of nonconformance

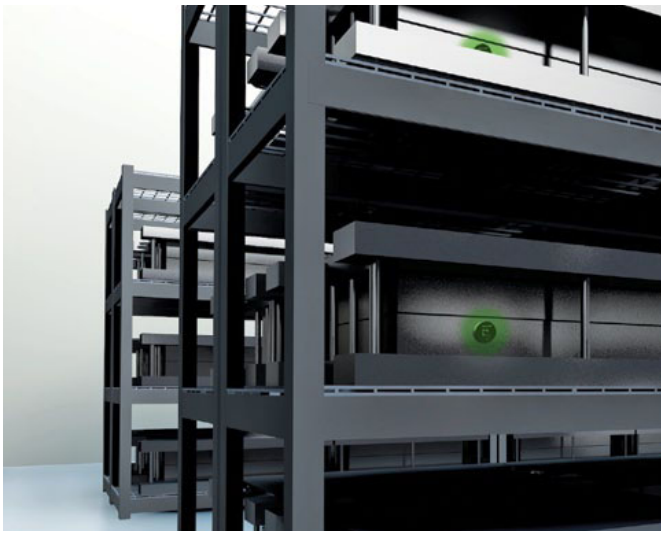

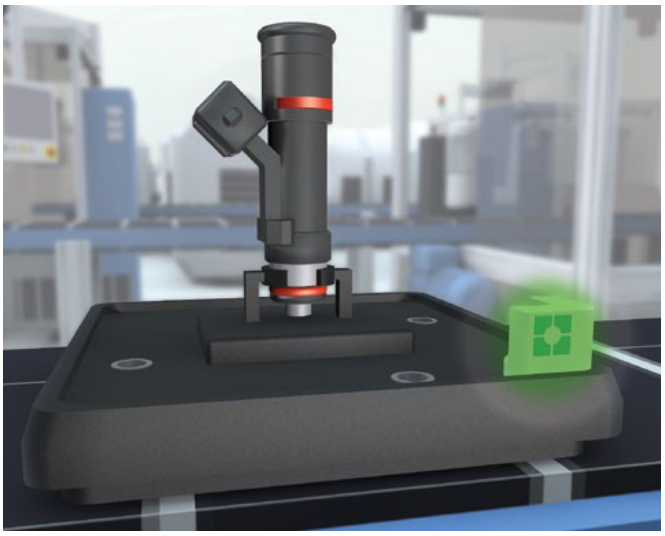

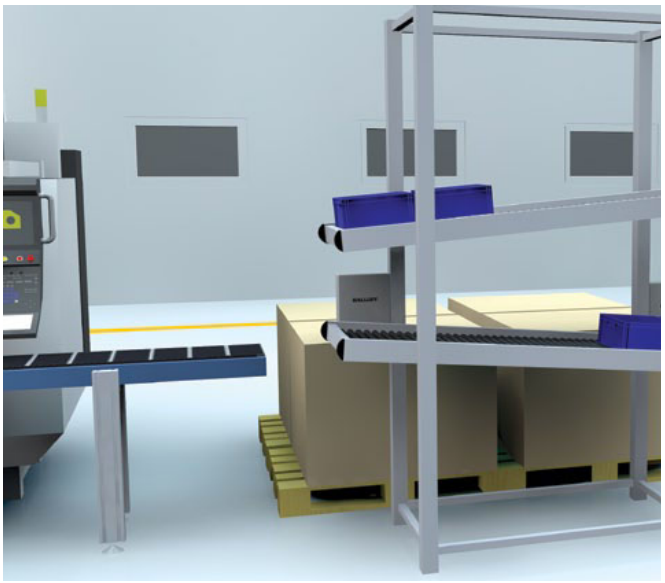

Traceability in Manufacturing

Starting a Traceability Program

Balluff can help provide a comprehensive overview of the four general areas where a traceability program will provide significant return on investment. We can work with you to identify the key ROI elements to help you plan your strategy. Identifying your area(s) of interest will help shape the type of hardware, software and integration required, as well as possible process changes to accomplish your goals.

Traceability implementation areas include:

- Asset Tracking – plant-based assets and machine tools
- Electronic Kanban – production material flow
- Production Control (WIP) – production and assembly processes
- Intra Logistic – material flow in or between facilities

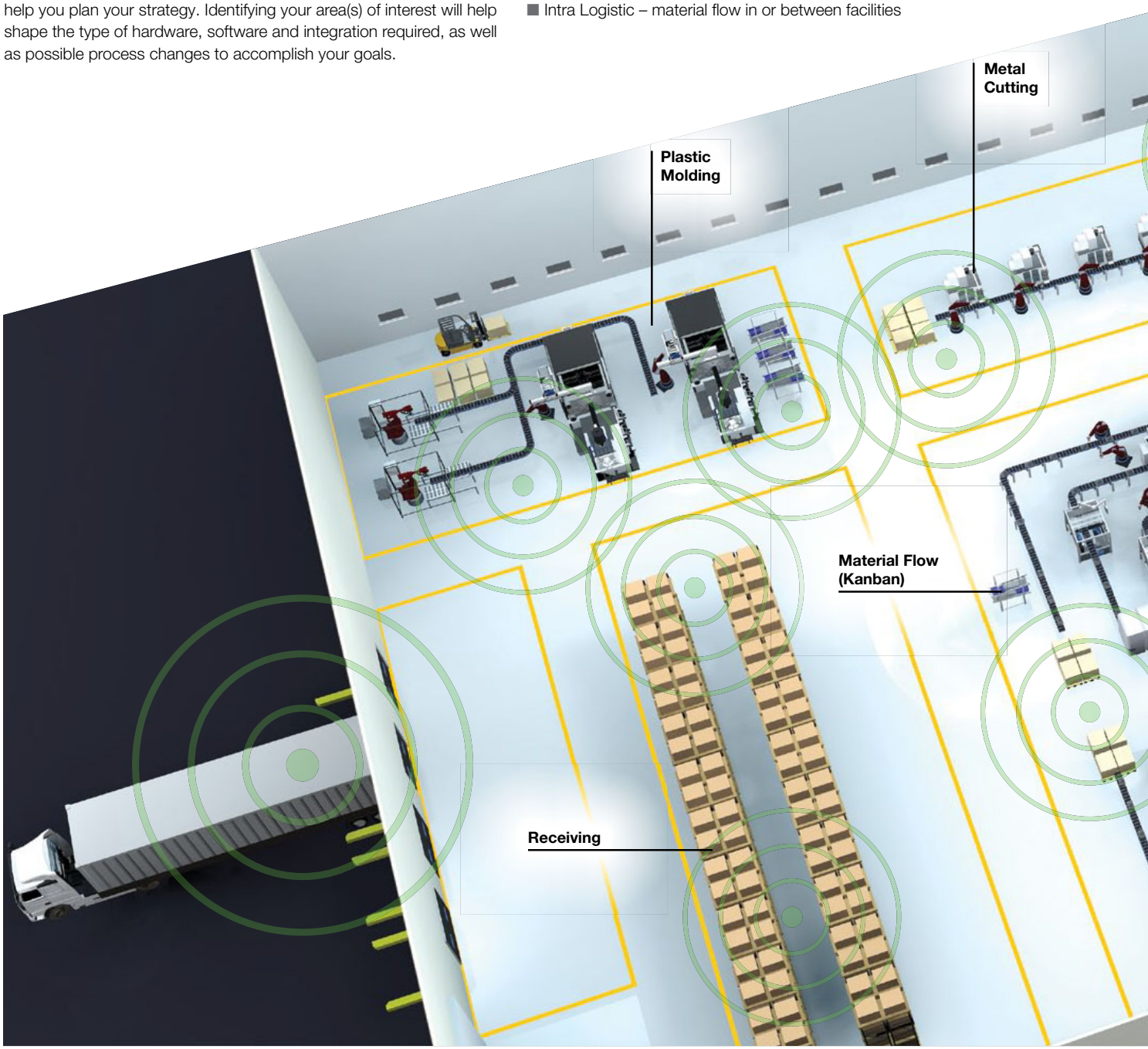

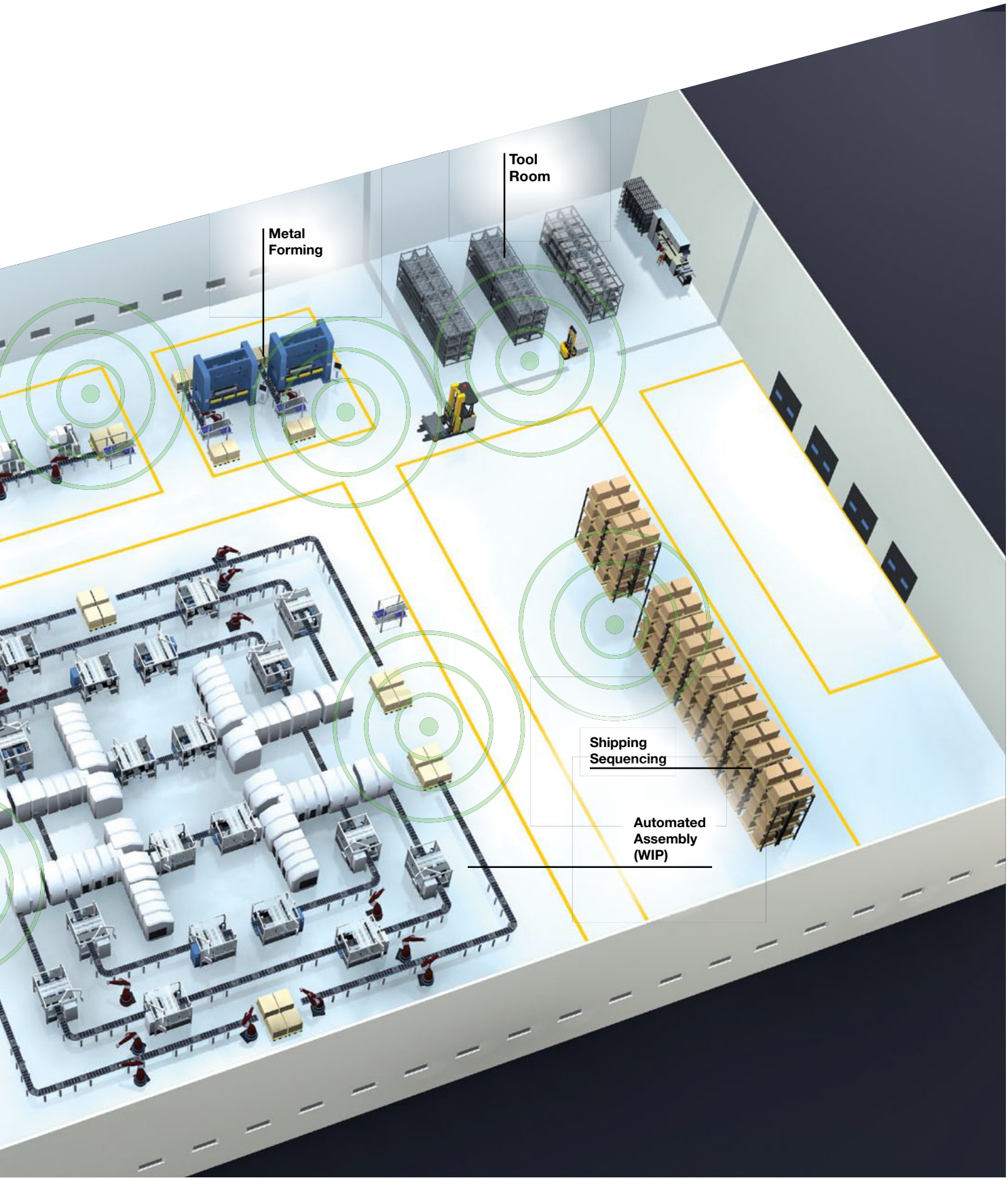
Tool
Room
Metal
Forming
Shipping
Sequencing
Automated
Assembly
(WIP)

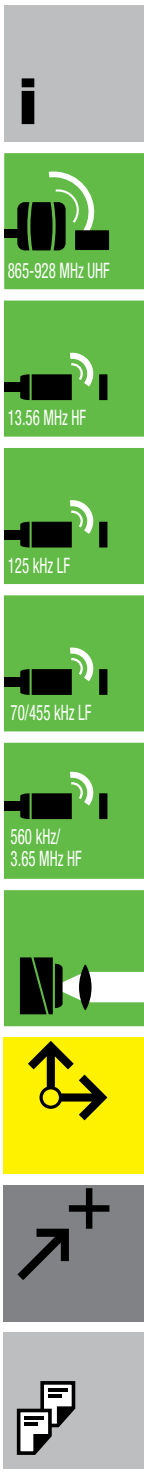
865-928 MHz UHF
13.56 MHz HF
125 kHz LF
70/455 kHz LF
560 kHz/
3.65 MHz HF

Identification Technology

What is RFID?
"RFID" means Radio Frequency Identification and is used to automatically identify any kind of part or container. A data carrier or "tag" is affixed to the part or container and acts as a portable or moving memory system. Balluff's tags are all "passive" based and do not use or require a battery source, minimizing or eliminating the need for any routine maintenance and significantly increasing reliability. Important traceability data can then be sent back and forth between the data carrier and a read or read/write head using either Electro-magnetic (UHF) or Inductive Coupling (HF or LF) based methods. The connected processor then sends the data to the host controller using an appropriate communication format. In contrast to bar coding methods, industrial RFID data can be changed or re-written, is fast and highly reliable even in changing environments and with large amounts of data.

BIS (Balluff Identification System) RFID leads the way in industrial identification with the largest variety of frequency options to provide the best and most reliably solution for the installations environment. BIS systems also provide the greatest choices of tag and read/write head options to choose from as well as Balluff's ability to provide customized solutions. Balluff BIS processors provide a communication solution to almost any common industrial host control or database system.

Identification Systems
Reliable visibility of the production, quality and logistics data brings maximum traceability to your production and supply chain. Balluff Industrial RFID leads the way in applications that require high quality, a high degree of production reliability and optimized processes.

Balluff offers several different RFID and vision systems with variety of components for a wide range of applications. Each system type has unique advantages well suited to solve today's industrial ID applications, such as:

- Production control
- Tool ID and management
- Maintenance/Servicing
- Asset tracking
- e-kanban
- Container management
- Stock management
- Logistics
- Consignment
- Forgery/Copy protection

Machine Tool Identification
Balluff is also the world's leader in providing Tool Identification and Tool Tracking solutions to the machine tool industry worldwide. In fact, Balluff got its start in making industrial RFID for this application and has significantly increased our expertise using this strong technology base. Balluff provides unique solutions for Tool ID that have provided a means for many Tool ID users to maximize their ROI on these systems and save millions of dollars in tool utilization, error prevention tool tracking.

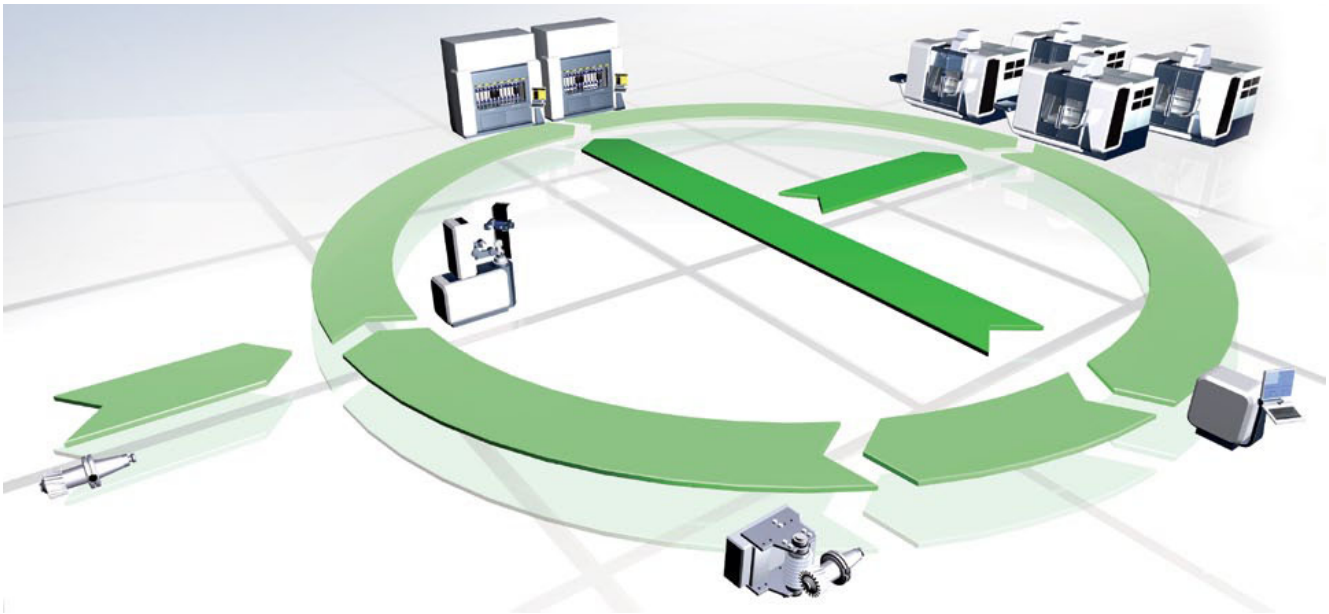

BVS Vision Sensors

Why a BVS Vision Sensor?
With ever growing demands for higher productivity, greater efficiency, 100% quality and lowering costs, Balluff BVS Vision Sensors provide visual sensing solutions to address all these needs.

Typically for complex multiple visual inspections, an array of sensors and code readers are employed. By using a BVS vision sensor, multiple visual inspections and bar code reading can all be addressed reliably by the same sensor, dramatically lowering hardware cost while greatly increasing sensing reliability. The BVS can also change inspection jobs while in-process eliminating the need for hardware or setup changes, increasing productivity and efficiency. The BVS is designed to be a flexible, vision-based sensing solution to address today's production sensing needs.

- Replace different sensor functions with one part
- Greater configuration flexibility
- Easy to use, single PC software interface
- Industrial grade, flexible mounting
- Lower cost and faster ROI

Hardware: Reduce hardware costs. One BVS Vision Sensor can replace up to 255 standard sensors.

Engineering and project planning: Instead of using a sensor array and multiple pieces of mounting hardware, use a single BVS. Significantly reduce setup and change-over times, simplify designs and reduce overall hardware costs. Several flexible BVS mounting options are available.

Startup: Startup and configuration: Configuration of any BVS is simple using a single intuitive PC software interface. With the easy 3-step setup process, no complex programing language or expensive training is required.

Operation and maintenance: No time consuming and complex multi-sensor realignment is necessary with product change-overs. The BVS allows for multiple inspection jobs that can be easily changed electronically, reducing effort and increasing productivity.

Comprehensive System Expertise from a Single Source

Electro-Magnetic Identification

865-928 MHz UHF

Industrial RFID System BIS U

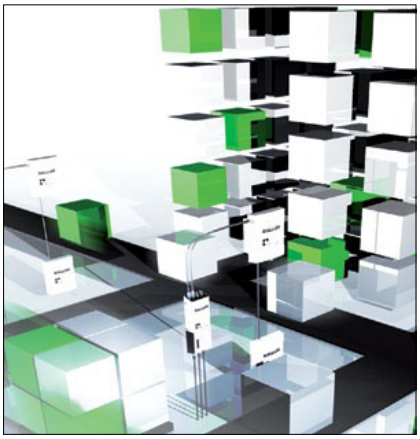

The **BIS U** system uses Ultra High Frequency or UHF 865...928 MHz propagating wave and back scatter technology along with passive tags to provide very long range RFID solutions as far as 6 m. This system is ideal for asset as well as intra or inter logistics tracking and identification applications. The BIS U includes high temperature and metal mounted tag solutions as well as combination hardened and disposable tags that can be used to provide the most cost effective and reliable solution.

page 16

Inductive Identification

13.56 MHz HF

Industrial RFID System BIS M

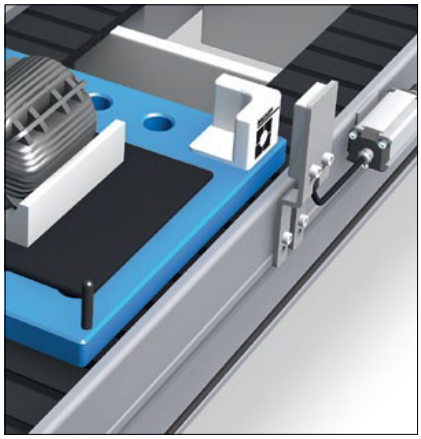

The **BIS M** system uses a High Frequency or HF 13.56 MHz inductively coupled technology along with passive tags to provide mid-range RFID solutions as far as 400 mm. This system is ideal for closer range asset tracking, WIP (work in process) or production control such as palletized production or "on part" tracking and quality traceability applications. This system also offers high temperature, metal mount, hardened and disposable tagging options.

page 30

125 kHz LF

Industrial RFID System BIS L

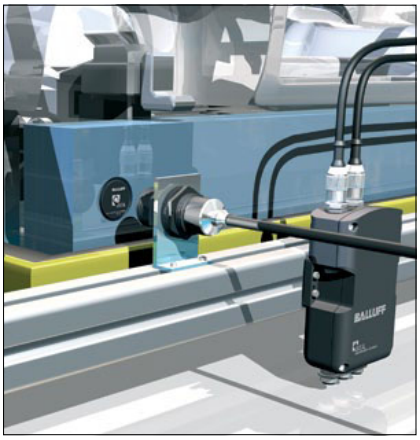

The **BIS L** system uses a Low Frequency or LF 125 kHz inductively coupled technology along with passive tags to provide shorter range RFID solutions up to 100 mm for WIP (work in process) or production control such as palletized production and quality traceability applications. The BIS L system is also used for lower cost read-only tracking applications when only an identifier is required. This system can be used on or off metal and provides hardened re-usable tagging options.

page 130

Vision-Based Identification

70 kHz LF

Industrial RFID System BIS C

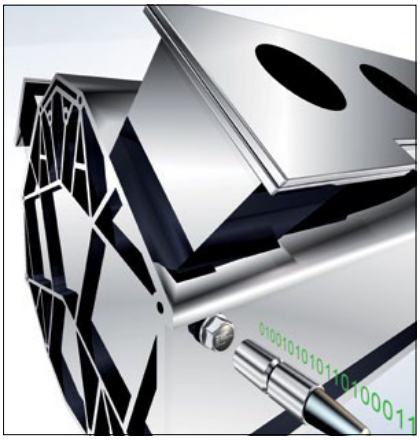

The **BIS C** system uses a Dual Low Frequency 433 kHz read and 70 kHz write inductively coupled technology along with passive tags to provide short range RFID solutions up to 100 mm for WIP (work in process) or production control such as palletized production or "on part" tracking and quality traceability applications. The BIS C system is also uniquely designed for solving machine tool identification applications. This system can be used flush in, on or off metal and provides hardened re-usable tagging options.

page 180

3.65 MHz HF

Industrial RFID System BIS S

The **BIS S** system uses a Dual Frequency 3.65 MHz read and 560 KHz write inductively coupled technology along with passive tags to provide short range RFID solutions up to 50 mm for applications that require high capacity memory for up to 32 kBytes of data. This system was specially designed for WIP (work in process) or production control such as palletized production and quality traceability applications. This system is used on metal and provides hardened reusable tagging options.

page 240

Vision Sensors BVS

When looking for reliable error detection and quality testing while working with multiple product features at the same time, use the **BVS-E** Vision Sensor to simplify these complex sensing applications. The BVS-E can also minimize change-over time when checking different parts on the same production line. This can increase a lines throughput rates and help increase quality and productivity levels. All the BVS-E vision sensors use the same, easy to use PC-based configuration software providing consistency across the entire product family.

page 254

BIS U Industrial RFID System

Electro-magnetic identification

The BIS U system uses Ultra High Frequency or UHF 865 to 928 MHz propagating wave and back scatter technology along with passive tags to provide very long range RFID solutions as far as 6 m. This system is ideal for asset as well as intra or inter logistics tracking and identification applications. The BIS U includes high temperature and metal mounted tag solutions as well as combination hardened and disposable tags that can be used to provide the most cost effective and reliable solution.

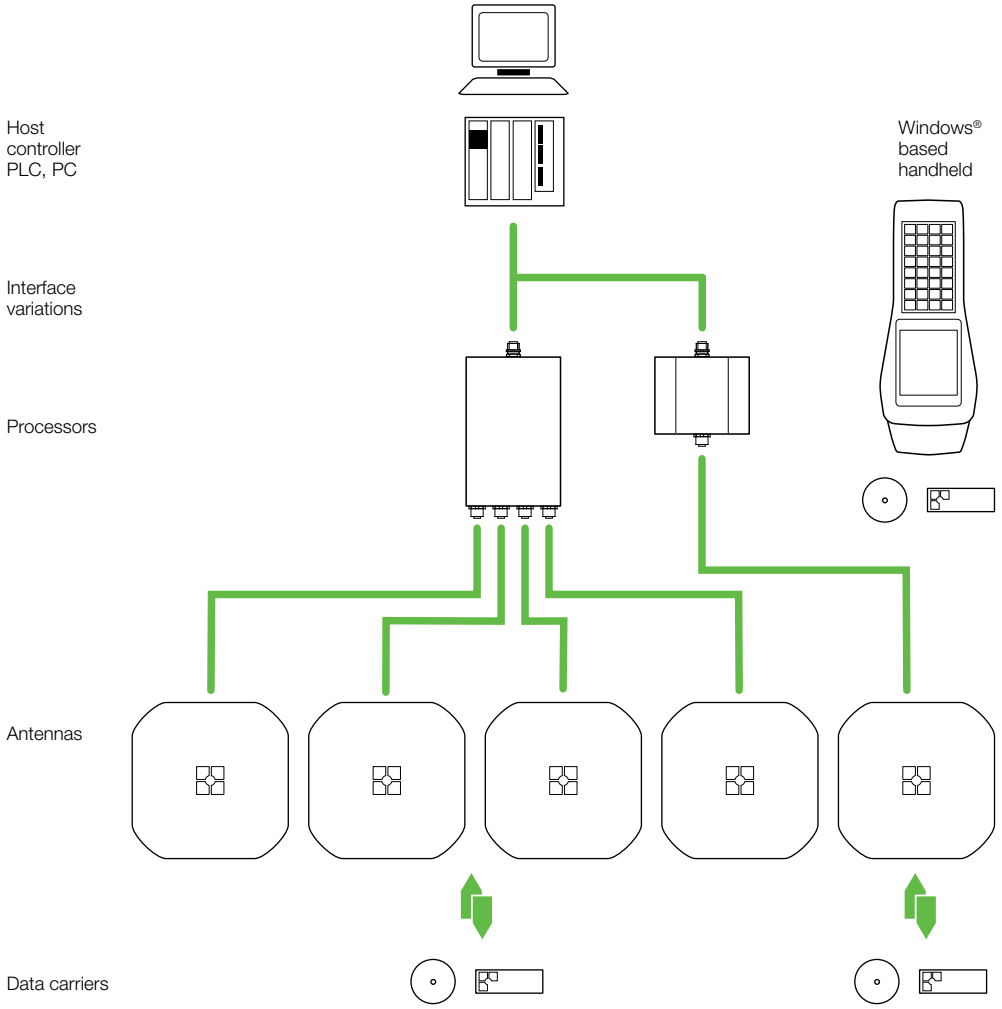

BIS U Industrial RFID System
Electro-magnetic identification

Process visibility and applications	18
Passive UHF tags	20
UHF antennas	22
UHF single channel processors	24
UHF multi-channel processors	26
UHF handheld	28

865-928 MHz UHF

Technical information and definitions can be found on **page 354**

The right data at the right time at the right place

Features
- Supports standard EPC Gen 2 tags
- Supports multiple enterprise or control interface options
- Up to four antennas can be used on one controller
- Does not require line of site
- Passive tags require no batteries

Benefits
- Tags available for any asset no matter how large or small and regardless of material
- Integration into most current system
- Multiple antennas provide redundant, reliable data
- Identifies multiple assets without having to scan each item separately
- Low cost passive tags ensure cost effectiveness, or durability, and longevity
- No battery replacement needed

Operation principles of the system

The BIS U Identification System is classified as a non-contacting system with read and write functionality for single or multiple UHF tags. This allows it to transport not only programmed information that is fixed on the data carrier (tag), but also to collect and pass on tag information to interfacing control or data collection systems.

The main components of the BIS U Identification System are:
- Processor
- Antennas(s)
- Data carrier (tag)

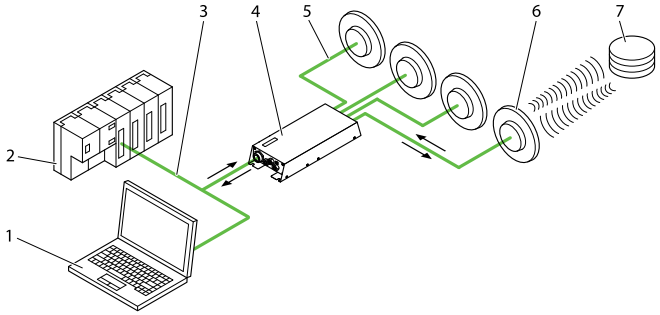

1 PC
2 PLC
3 Connection to the host system
4 Processor unit
5 Antenna cable
6 Antennas (max. 4)
7 Data carrier

Asset tracking

UHF-based RFID provides a means of identifying and tracking assets like tools, production equipment, medical devices, installed parts, logistic containers, and even reusable assets like totes, bins and skids.

Logistics tracking

Tracking incoming and outgoing shipments of parts and products are key to the efficiency and operation of any production facility. UHF-based RFID enables a reliable, non-visual way to identify multiple containers and shipment information quickly and reliably.

Closed loop and supply chain logistics

When moving parts from suppliers to main production facilities, UHF-based RFID can be a significantly more reliable and a faster way to identify incoming shipments, contents and reusable assets like totes, part containers, skids, and transport containers.

Production tracking

During the production process, RFID can be used to track parts and enable visibility into the process itself. UHF-based RFID can provide a means to track parts or part pallets at greater distances allowing greater freedom of use.

e-Kanban

Electronic Kanban is a messaging system that allows a mix of information and control for the tracking and movement of production components. e-Kanban can be used to provide faster flow of information and replaces traditional elements such as cards with RFID and barcode.

Passive UHF tags

Passive UHF tags

- Great range on or off metal (with holder or spacer)
- Rugged housing
- Available for high temperature applications

Specialty tags

Balluff can offer a wide variety of highly specialized UHF RFID tags. From tiny metal mount tags designed to track individual tools to the larger tags designed to track vehicles, Balluff can help match the right tag to the right assets. In addition to rugged tags used in harsh environments, Balluff can also provide tags in paper (label) and other synthetic materials. Tag selection should be based on the environment and the asset. Contact Balluff for additional tagging options.

Dimensions		**127×37.2×7 mm**	
Housing material		PA 12 (fiberglass reinforced)	
Weight		18 g	
For EU			
Frequency range	**Ordering code**	**BIS00NL**	
865...868 MHz	Part number	BIS U-100-01/CA	
For US/CA/MX/BR			
Frequency range	**Ordering code**	**BIS00RC**	
902...928 MHz	Part number	BIS U-100-02/CA	
For Global			
Frequency range	**Ordering code**		
860...960 MHz	Part number		
Mounting		on metal only with spacer	
User data		512 bit EEPROM	
Frequency		865...960 MHz	
Degree of protection per IEC 60529		IP 67	
Memory capacity read/write		96...480 bit EPC, 512 bit user memory	
Standards		EPC, Class 1, Gen 2, ISO 18000-6C	
Operating temperature		–40...+85 °C	
Storage temperature		–40...+85 °C	

Mounting (see technical section for details):

non-metal

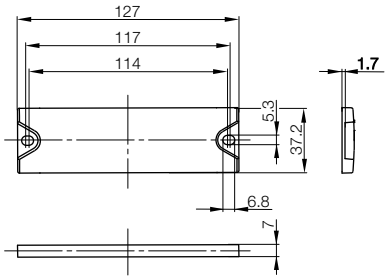

Balluff can provide many other metal mount and label UHF tag options from third party partners. Contact your Balluff provider or Balluff sales person for more options and information.

BIS U Industrial RFID System
Passive UHF tags

High Temperature

High Temperature

	51.5x51.5x6.5 mm	**127.7x51.5x11 mm**	**51.5x51.5x6.5 mm**	**127.7x51.5x11 mm**
	ABS	ABS	PPS	PPS
	32 g	48 g	47 g	70 g
	BIS00WH	**BIS00WE**	**BIS00WF**	**BIS00WC**
	BIS U-101-04/CA	BIS U-102-05/CA	BIS U-101-04/CA-HT	BIS U-102-05/CA-HT
	on metal only with spacer	on metal only with spacer	on metal only with spacer	on metal only with spacer
	512 bit EEPROM	512 bit EEPROM	512 bit EEPROM	512 bit EEPROM
	860...960 MHz (Global)	860...960 MHz (Global)	860...960 MHz (Global)	860...960 MHz (Global)
	IP 67	IP 67	IP 67	IP 67
	240 bit EPC, 512 bit user memory	240 bit EPC, 512 bit user memory	240 bit EPC, 512 bit user memory	240 bit EPC, 512 bit user memory
	EPC, Class 1, Gen 2, ISO 18000-6C	EPC, Class 1, Gen 2, ISO 18000-6C	EPC, Class 1, Gen 2, ISO 18000-6C	EPC, Class 1, Gen 2, ISO 18000-6C
	–40...+85 °C	–40...+85 °C	–40...+85 °C	–40...+85 °C
	–40...+85 °C	–40...+85 °C	–40...+220 °C	–40...+220 °C

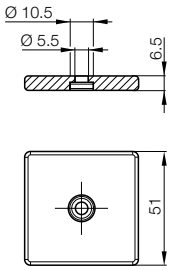

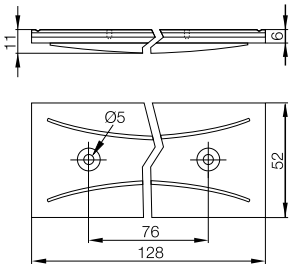

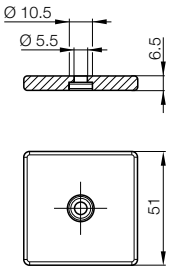

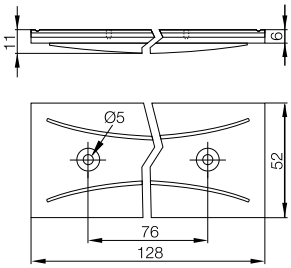

UHF Databolt options available upon request.

UHF antennas

The frequency range for UHF systems is dependent on the region of use. There are country-specific variants here as with the readers. The power available to the antenna can be flexibly set via the reader. Regardless of whether you install the antennas near gates or plan to use them in a conveyor line – the wide range of accessories simplifies integration in all places of use.

Balluff UHF Antennas

- Simple mounting with standard accessories
- Rugged metal connector for secure connection
- Rugged housing built for harsh environments
- Available in different sizes

For EU
865...868 MHz

Dimensions	**133×133×18.4 mm**	
Housing material	PC	
Weight	365 g	
Ordering code	**BIS00P0**	
Part number	BIS U-301-C0-TNCB	
Frequency range	865...868 MHz	
Approved radiated power	< 0.5 W ERP ETSI EN 302208	
Antenna gain	5.5 dBic	
Antenna impedance	50 Ω	
Connection type	1× TNC connector female	
Degree of protection per IEC 60529	IP 67 (with connector)	
Operating temperature T_a	–30...+70 °C	
Dispersion angle	100° vertical, 100° horizontal	
Connection cable	See Connectivity section for cable options	

For installation see technical section.

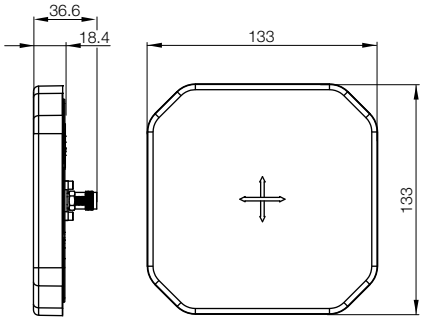

BIS U Industrial RFID System
UHF antennas

For US/CA/MX/BR
902...928 MHz

For EU
865...868 MHz

For US/CA/MX/BR
902...928 MHz

133×133×18.4 mm	**271×271×42.5 mm**	**271×271×42.5 mm**
PC	Polymer blend	Polymer blend
365 g	1700 g	1700 g
BIS00TY	**BIS00TZ**	**BIS00U0**
BIS U-301-C1-TNCB	BIS U-302-C0-TNCB	BIS U-302-C1-TNCB
902...928 MHz	865...868 MHz	902...928 MHz
< 4 W EIRP FCC	< 2 W ERP ETSI EN 302208	< 4 W EIRP FCC CFR47
5.5 dBic	8.4 dBic	8.4 dBic
50 Ω	50 Ω	50 Ω
1× TNC connector female	1× TNC connector female	1× TNC connector female
IP 67 (with connector)	IP 65	IP 65
–30...+70 °C	–25...+55 °C	–25...+55 °C
100° vertical, 100° horizontal	69° vertical, 69° horizontal	69° vertical, 69° horizontal
See Connectivity section for cable options	See Connectivity section for cable options	See Connectivity section for cable options

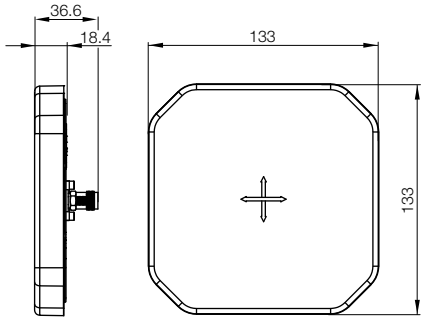

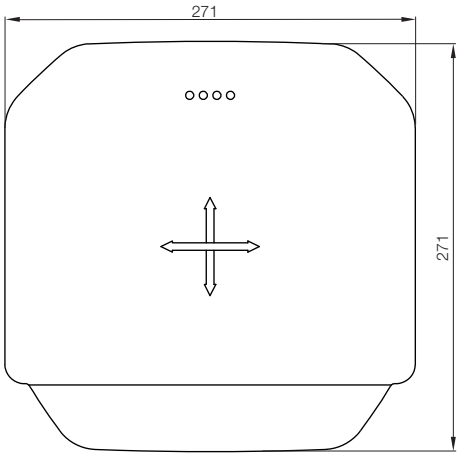

UHF single channel processors

Function		
Housing material		
Weight		
For EU		
Frequency range	**Ordering code**	
865...868 MHz	Part number	
For US/CA/MX		
Frequency range	**Ordering code**	
902...928 MHz	Part number	
Operating voltage		
Current consumption at 24 V DC		
Application interface		
Connection power supply, interface		
Connection control inputs, outputs (1× DI, 2× DO)		
Antenna ports		
Degree of protection per IEC 60529		
Connection cable		

For installation see technical section.

Serial

RS232 interface

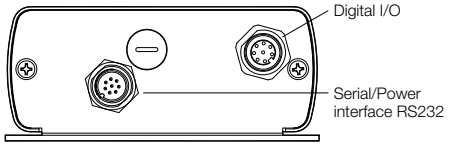

Serial

RS485 interface

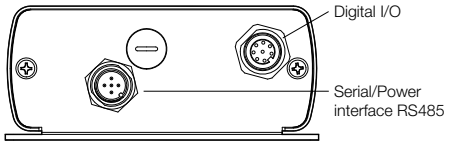

Ethernet

Ethernet interface

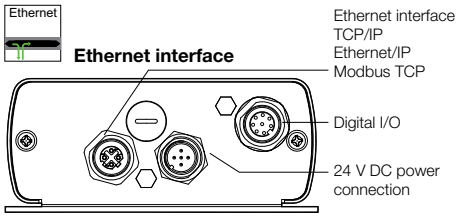

1 antenna on top

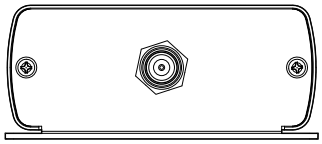

BIS U Industrial RFID System
UHF single channel processors

	Read/write	**Read/write**	**Read/write**
	Aluminum	Aluminum	Aluminum
	497 g	497 g	497 g
	BIS00Z4	**BIS00Z8**	**BIS00Z0**
	BIS U-620-068-101-00-ST29	BIS U-620-067-101-04-ST30	BIS U-626-069-101-06-ST32
	BIS00Z2	**BIS00Z6**	**BIS00YY**
	BIS U-620-068-111-00-ST29	BIS U-620-067-111-04-ST30	BIS U-626-069-111-06-ST32
	24 V DC (10...30 V DC)	24 V DC (10...30 V DC)	24 V DC (10...30 V DC)
	≤ 1 A	≤ 1 A	≤ 1 A
	Serial RS232	**Serial RS485**	**Ethernet, TCP/IP, Modbus TCP**
	1× M12 connector male, 8-pin	1× M12 connector male, 5-pin	1× M12 connector male, 5-pin
	1× M12 connector female, 8-pin	1× M12 connector female, 8-pin	1× M12 connector female, 8-pin
	1× R-TNC connector male	1× R-TNC connector male	1× R-TNC connector male
	IP 65	IP 65	IP 65
	See Connectivity section for cable options	See Connectivity section for cable options	See Connectivity section for cable options

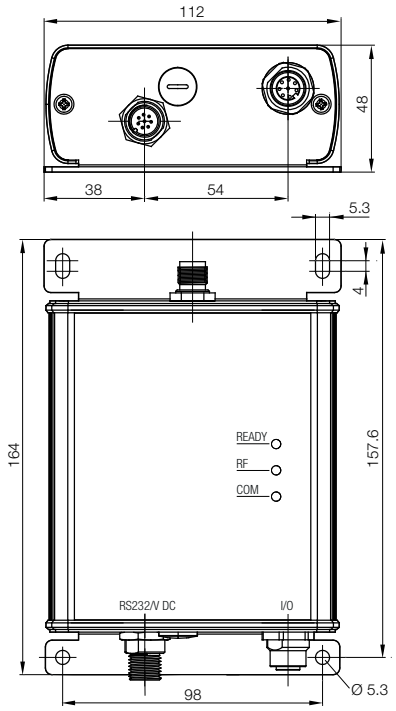

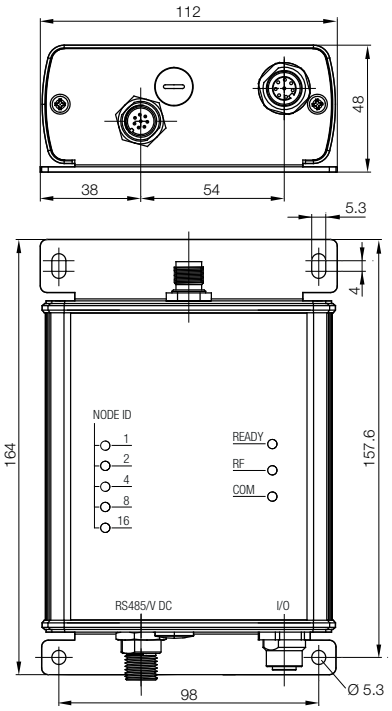

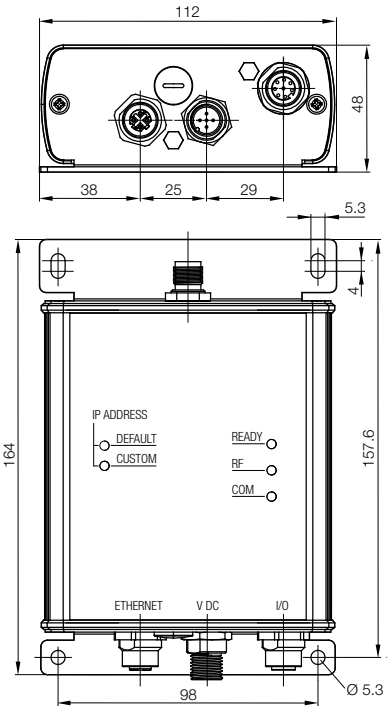

UHF multi-channel processors

- Simple mounting with standard accessories
- Metal connector for secure connection
- Rugged housing for use where you need it

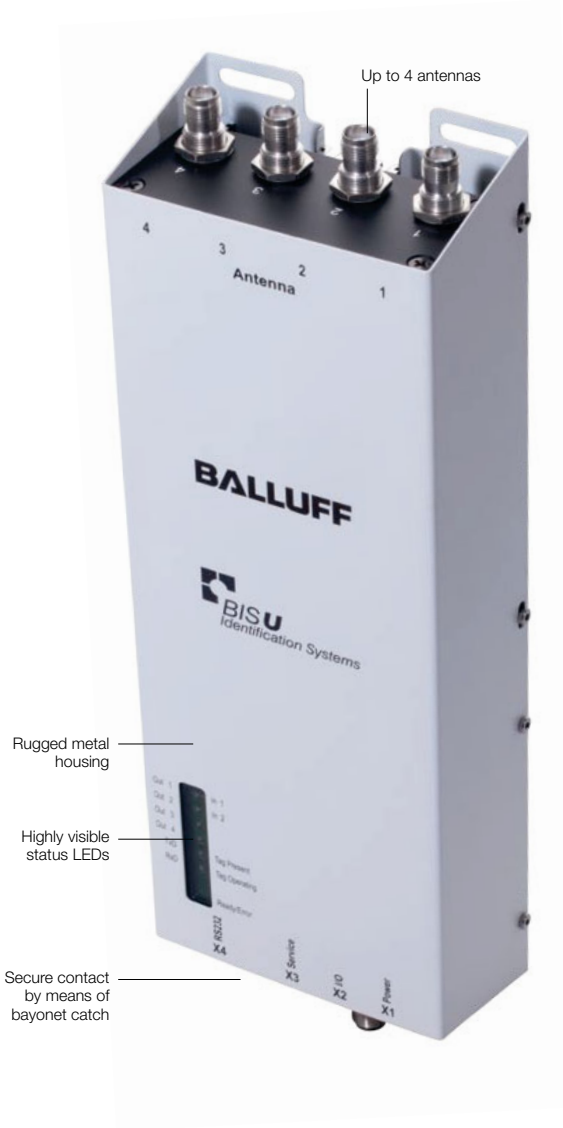

Function		
Housing material		
Weight		
For EU		
Frequency range	**Ordering code**	
865...868 MHz	Part number	
For US/CA/MX		
Frequency range	**Ordering code**	
902...928 MHz	Part number	
For BR		
Frequency range	**Ordering code**	
915...928 MHz	Part number	
Operating voltage, Ripple		
Current consumption at 24 V DC		
Service interface		
Application interface		
Characteristic impedance of antenna ports		
Adjustable power at the antenna ports		
Connection X1		
Connection X2		
Connection X3		
Connection X4		
Antenna ports 1...4		
Degree of protection per IEC 60529		
Connection cable		

For installation see technical section.

EtherNet/IP communication option available in 2014.

Included in the scope of delivery:
- BIS U-602_
- 5× closure cap
- BIS Software-CD
- Condensed manual in printed form (DE/EN)

Accessories (please order separately)
DLL for integrating the protocol in PC-based controller or evaluation unit.

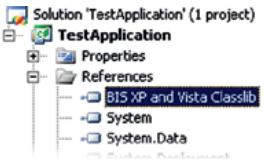

Ordering code: BAE00F2
Part number: BIS-Z-SW-UHF-DLL

Serial
RS232 interface

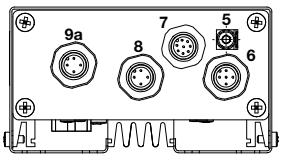

PROFINET
Profinet interface

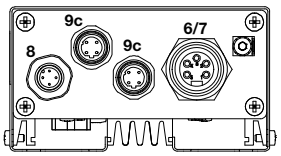

Ethernet
Ethernet TCP/IP interface

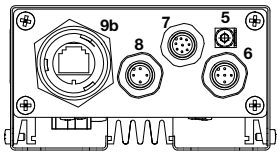

4 antennas on top

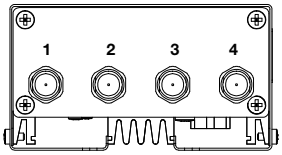

1	Antenna port 1
2	Antenna port 2
3	Antenna port 3
4	Antenna port 4
5	Function ground FE
6	Power supply
7	Control inputs / outputs I/O ports for additional functionality
8	RS232 service interface
9a	Application interface – RS232 variant
9b	Application interface – TCP/IP variant
9c	Application interface – Profinet

BIS U Industrial RFID System
UHF multi-channel processors

	Read/write	**Read/write**	**Read/write**
	Aluminum	Aluminum	Aluminum
	2100 g	2100 g	2100 g
	BIS00M7	**BIS00NA**	**BIS00ZU**
	BIS U-6020-053-104-00-ST26	BIS U-6027-054-104-06-ST27	BIS U-6028-048-104-06-ST28
	BIS00R2	**BIS00R1**	**BIS00ZW**
	BIS U-6020-059-114-00-ST26	BIS U-6027-060-114-06-ST27	BIS U-6028-048-114-06-ST28
	BIS00UM	**BIS00UN**	
	BIS U-6020-059-134-00-ST26	BIS U-6027-060-134-06-ST27	
	24 V DC ±20 %, ≤ 10 %	24 V DC ±20 %, ≤ 10 %	24 V DC ±20 %, ≤ 10 %
	≤ 1 A	≤ 1 A	≤ 1 A
	RS232	RS232	RS232
	RS232	**Ethernet TCP/IP**	**Profinet**
	50 Ω	50 Ω	50 Ω
	For Europe 17...33 dBm (50 mW...2 W) For USA 17...30 dBm (50 mW...1 W)	For Europe 17...33 dBm (50 mW...2 W) For USA 17...30 dBm (50 mW...1 W)	For Europe 17...33 dBm (50 mW...2 W) For USA 17...30 dBm (50 mW...1 W)
	V_S 24 V DC: 1× M12 connector male, 5-pin	V_S 24 V DC: 1× M12 connector male, 5-pin	V_S 24 V DC: 1× 7/8" connector male, 5-pin
	I/O: 1× M12 connector male, 8-pin	I/O: 1× M12 connector male, 8-pin	Profinet 2: 1× M12, connector male, 4-pin, D-code
	Service port: 1× M12 connector male, 4-pin	Service port: 1× M12 connector male, 4-pin	Profinet 1: 1× M12 connector male, 4-pin, D-code
	RS232: 1× M12 connector male, 4-pin	TCP/IP: 1× RJ45 bayonet connector	Service port: 1× M12 connector male, 4-pin
	4× R-TNC connector male	4× R-TNC connector male	4× R-TNC connector male
	IP 65	IP 65	IP 65
	See Connectivity section for cable options	See Connectivity section for cable options	See Connectivity section for cable options

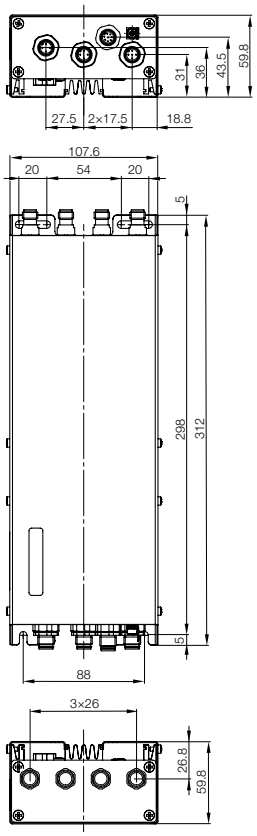

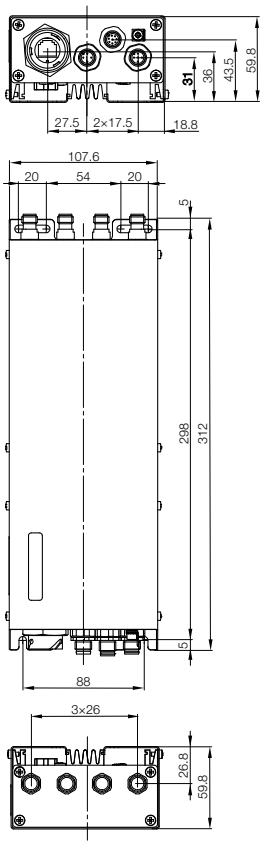

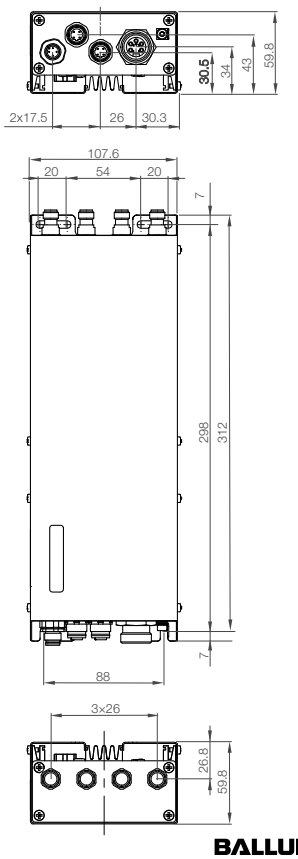

Mobile ID
Ideal even for poor light conditions and harsh environments. Data transfer via optional WLAN, Bluetooth or wired USB. The handheld is also modular for expandability.

- Touchscreen with large color display
- Windows CE®
- Preinstalled Balluff software and keyboard

Handheld Standard
BIS U-870-1-008-X-000-3...
including charger

PSION-based UHF handheld
- Windows CE®
- Touchscreen
- Delivered with software development kit (SDK)
- Includes charger
- Bluetooth "on-board"

Optional
- WLAN
- 1D/2D barcode reader
- Docking station
- Pistol grip

Customer-specific software on request:
techsupport@balluff.com

BIS U Industrial RFID System
UHF handheld

For EU

For US/CA/MX

Function		Read/write	Read/write
Housing material		ABS	ABS
Weight		585 g	585 g
Standard	**Ordering code**	**BAE00EE**	
	Part number	BIS U-870-1-008-X-000	BIS U-870-1-008-X-000-1-3000
Standard + WLAN	**Ordering code**	**BAE00J8**	
	Part number	BIS U-870-1-008-X-001	BIS U-870-1-008-X-001-1-3000
Indicator		TFT touchscreen display	TFT touchscreen display
Power supply		3.7 V rechargeable battery pack	3.7 V rechargeable battery pack
Capacity		4000 mA/h	4000 mA/h
Interface		Bluetooth/USB	Bluetooth/USB
Operating temperature		–10...+50°C	–10...+50°C
Degree of protection per IEC 60529		IP 65	IP 65
Accessories		Charging power supply and stylus	Charging power supply and stylus
Order accessories separately		Docking station and pistol grip	Docking station and pistol grip

Handheld Standard **BIS U-87_-1-008-x-000_**
Includes charger and stylus

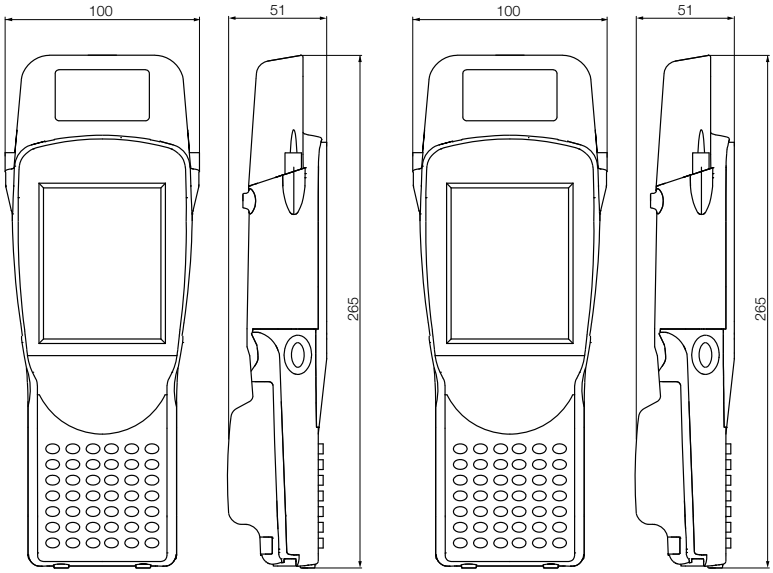

Recommended accessories
(please order separately)

Description	Pistol grip option	Optional docking station with power supply	Replacement battery 4000mAh rechargeable battery
Part code	**FHW0004**	**FHW0003**	**WA3010**
Part number	11023836	11023834	162936

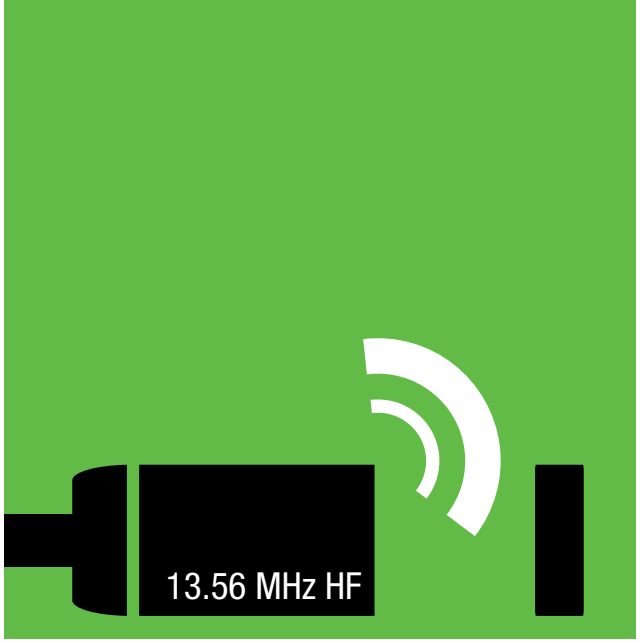

BIS M Industrial RFID System

Inductive Identification

The **BIS M** system uses a High Frequency or HF 13.56 MHz inductively coupled technology along with passive tags to provide mid-range RFID solutions as far as 400 mm. This system is ideal for closer range asset tracking, WIP (work in process) or production control such as palletized production or "on part" tracking and quality traceability applications. This system also offers high temperature, metal mount, hardened and disposable tagging options.

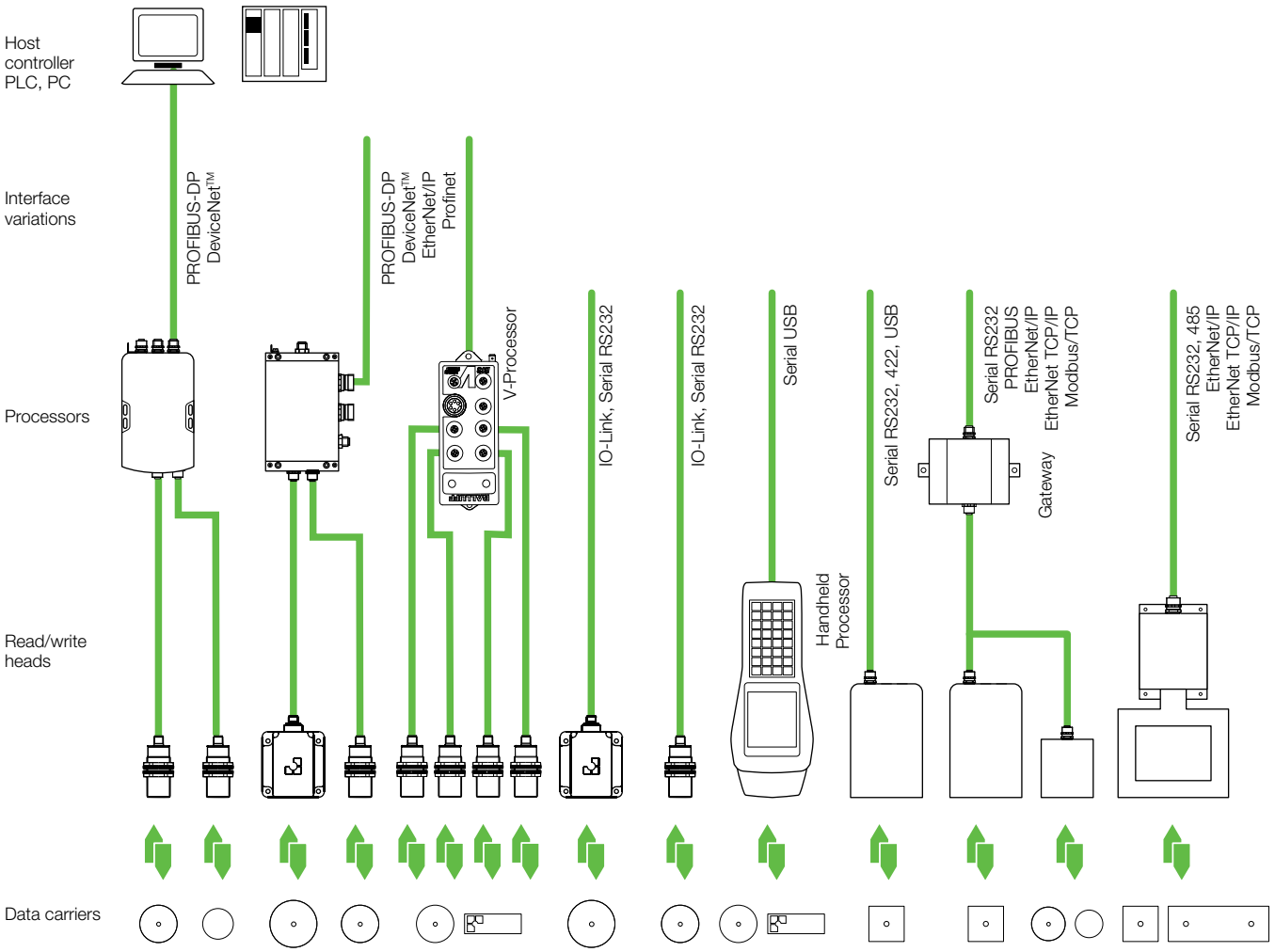

BIS M Industrial RFID System
Inductive identification

Range of applications	32
Selection criteria for read/write distances	34
Data carriers	38
Barrel – Read/write heads	58
Barrel – Read/write heads with integrated processor	64
Block – Read/write heads	68
Block – Read/write heads with integrated processor	74
Remote – Read/write heads	82
Remote – Read/write heads with integrated processor	88
Long range	90
Long range – Read/write heads with integrated processor	92
Long range – Controllers	94
Long range – Antenna	96
Processors – Serial	104
Processors – PROFIBUS-DP	106
Processors – DeviceNet™	108
Processors – EtherNet/IP™	110
Processors – Ethernet TCP/IP	111
Processors – PROFINET	112
Processors – for Mitsubishi controller	114
Processors – CC-Link	115
Processors – BIS V	116
Gateways	118
Handheld and software	120
Mechanical accessories	128

13.56 MHz HF

Technical information and definitions can be found on **page 354**

BIS M Industrial RFID Systems
Wide range of applications supported

The main areas of application for the BIS M include internal company logistics, access control and copy protection. The powerful identification system is proven in all applications where lightning-fast data transfer and large read/write distances are required. Select the most suitable BIS M system for your application from the table.

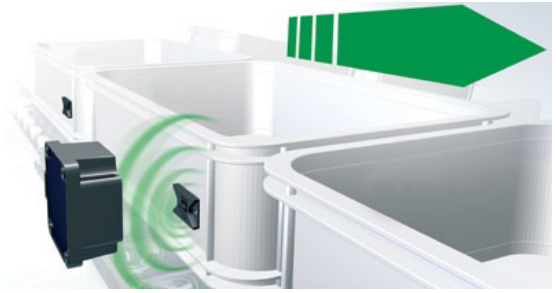

Data carrier		Page
BIS003Y	BIS M-101-01/L	41
BIS003Z	BIS M-102-01/L	43
BIS0040	BIS M-105-01/A	38
BIS0042	BIS M-105-02/A	38
BIS00LC	BIS M-107-03/L-H200	57
BIS0043	BIS M-108-02/L	46
BIS0111	BIS M-108-20/A	46
BIS0044	BIS M-110-02/L	38
BIS0045	BIS M-111-02/L	41
BIS0046	BIS M-112-02/L	43
BIS00KM	BIS M-115-03/A	47
BIS00RZ	BIS M-115-03/A-SA2	47
BIS00UC	BIS M-116-03/A	39
BIS00UE	BIS M-116-08/A	39
BIS0047	BIS M-120-01/L	47
BIS0048	BIS M-122-01/A	38
BIS0049	BIS M-122-01/A-ZC1	49
BIS004A	BIS M-122-02/A	38
BIS00T1	BIS M-122-02/A-SA2	50
BIS00YL	BIS M-130-03/L	39
BIS00YK	BIS M-130-07/L	39
BIS00YF	BIS M-132-03/L	40
BIS00YE	BIS M-132-03/L-HT	56
BIS00YC	BIS M-132-10/L	41
BIS00YA	BIS M-132-10/L-HT	56
BIS00Y9	BIS M-133-02/A	41
BIS00Y7	BIS M-134-10/L-HT	56
BIS00Y6	BIS M-135-02/L	44
BIS00Y5	BIS M-135-03/L	44
BIS00Y4	BIS M-135-03/L-HT	57
BIS00Y3	BIS M-135-07/L	44
BIS00Y2	BIS M-135-07/L-HT	57
BIS00W9	BIS M-136-03/L	46
BIS00Y1	BIS M-136-03/L-HT	57
see data carriers	BIS M-140-02/A-M_	53
see data carriers	BIS M-142-02/A-M_-GY	51
see data carriers	BIS M-142-20/A-M_-GY	51
see data carriers	BIS M-143-02/A-M_	51
see data carriers	BIS M-144-02/A-M_-GY	53
BIS004F	BIS M-150-02/A	54
BIS004H	BIS M-151-02/A	54
BIS00M2	BIS M-152-03/A	48
BIS00P3	BIS M-153-02/A	56
BIS010R	BIS M-153-20/A	55
BIS00P1	BIS M-154-03/A	49
BIS0117	BIS M-155-20/A	55
BIS0112	BIS M-156-20/A	55
BIS00NZ	BIS M-191-02/A	49

BIS M Industrial RFID Systems

Suggested application

	Production				Intralogistics						Access and object control												
	Tool and die management		Assembly conveying systems		Closed logistics circuits		Storage and retrieval equipment		Driverless vehicles		Object detection		Access and entry control										
	On tool	Dies	Pallets	On part	Retainer/workpiece carrier	Pallets	Retainer/workpiece carrier	Workpiece carrier skid	Guiding, steering	Identification	In component	On component	Reliable access control	Process access	Part ID	Read/write	Dynamic or static	Installation in metal	For harsh environments	For high temperature	Long distances (> 16 mm)	EEPROM	FRAM
			■		■					■				■		■	■				■	■	
			■		■	■				■				■		■	■				■	■	
	■	■	■	■			■				■		■		■	■		■	■			■	
	■	■	■	■			■				■		■		■	■		■	■				■
		■	■			■	■	■								■	■		■	■		■	
	■	■	■		■		■	■				■			■	■	■		■				■
			■		■		■	■				■			■	■	■		■				■
			■		■	■	■						■	■		■	■		■				■
			■		■	■	■			■			■	■		■	■		■		■		■
			■		■	■				■				■		■	■		■		■		■
		■		■	■	■	■	■								■	■				■	■	
		■		■	■	■	■	■								■	■				■	■	
			■	■							■	■	■	■	■	■	■	■	■			■	
			■	■							■	■	■	■	■	■	■	■	■			■	
						■								■		■	■				■	■	
	■	■	■	■			■				■		■		■	■		■				■	
																■		■				■	
	■	■	■	■			■				■		■		■	■		■	■				■
		■	■	■												■	■	■	■				■
	■	■	■	■							■	■		■	■	■	■		■			■	
	■	■	■	■							■	■		■	■	■	■		■			■	
	■	■	■	■	■	■	■	■				■		■	■	■	■		■		■	■	
	■	■	■	■	■	■	■	■				■		■	■	■	■		■	■	■	■	
	■	■	■	■	■	■	■	■				■		■	■	■	■		■			■	
	■	■	■	■	■	■	■	■				■		■	■	■	■		■	■		■	
	■	■	■	■	■	■	■	■			■	■				■	■	■	■				■
		■	■		■	■	■	■				■				■	■		■	■	■	■	
		■	■		■	■	■	■				■		■		■	■		■		■		■
		■	■		■	■	■	■				■		■		■	■		■		■	■	
		■	■		■	■	■	■				■		■		■	■		■		■	■	
		■	■		■	■	■	■				■		■		■	■		■	■	■	■	
		■	■		■	■	■	■				■		■		■	■		■		■	■	
		■	■		■	■	■	■				■		■		■	■		■		■	■	
		■	■		■	■	■	■				■		■		■	■		■	■	■	■	
		■	■	■												■	■	■	■		■		■
			■		■											■	■	■	■				■
			■		■											■	■	■	■				■
			■		■											■	■	■	■				■
			■		■											■	■	■	■				■
			■		■											■	■	■	■				■
	■	■	■			■	■	■		■		■				■	■	■	■		■		■
	■	■	■			■	■	■		■		■				■	■	■	■		■		■
	■	■		■							■	■	■		■	■	■	■	■			■	
			■		■			■															■
			■		■			■															■
	■	■		■							■	■	■		■	■	■	■	■			■	
	■	■	■		■	■	■	■				■				■	■	■	■		■		■
	■	■	■		■	■	■	■				■				■	■	■	■		■		■
			■													■	■	■	■				■

13.56 MHz HF

Range of Applications

Selection Criteria

Data carriers

Barrel

Read/write heads

Read/write heads with integrated processor

Block

Read/write heads

Read/write heads with integrated processor

Remote

Read/write heads

Read/write heads with integrated processor

Long range

Read/write heads

Read/write heads with integrated processor

Controller

Antenna

Processors

Gateways

Handheld

Accessories

BIS M Industrial RFID Systems

Selection criteria for read/write distances

Memory	Data carrier	0	5	10	15	20	25	30	35	40	45	50	55	60	65	70	75	80	100	120	140	160	mm
BIS M-302-00_-...																							
752 bytes	BIS M-101-01/L	■	■	■	■																		0...16
752 bytes	BIS M-102-01/L	■	■	■	■	■																	0...20
752 bytes	BIS M-105-01/A	■	■																				0...7
2000 bytes	BIS M-105-02/A	■	■	■																			0...9
752 bytes	BIS M-122-01/A	■	■																				0...7
2000 bytes	BIS M-122-02/A	■	■	■																			0...9
2000 bytes	BIS M-108-02/L	■	■	■	■	■																	0...20
2000 bytes	BIS M-110-02/L	■	■	■	■																		0...16
2000 bytes	BIS M-111-02/L	■	■	■	■	■																	0...20
2000 bytes	BIS M-112-02/L	■	■	■	■	■	■	■															0...30
2000 bytes	BIS M-140-02/A-M_	■	■	■	■																		0...14
2000 bytes	BIS M-142-02/A-M_	■	■	■	■																		0...14
2000 bytes	BIS M-143-02/A-M_	■	■	■																			0...10
2000 bytes	BIS M-144-02/A-M_	■	■	■	■																		0...14
BIS M-304-00_-...																							
752 bytes	BIS M-101-01/L	■	■	■	■																		0...14
752 bytes	BIS M-102-01/L	■	■	■	■	■																	0...18
752 bytes	BIS M-105-01/A	■																					0...5
2000 bytes	BIS M-105-02/A	■	■																				0...7
752 bytes	BIS M-122-01/A	■																					0...5
2000 bytes	BIS M-122-02/A	■	■																				0...7
2000 bytes	BIS M-108-02/L	■	■	■	■	■																	0...18
2000 bytes	BIS M-110-02/L	■	■	■	■																		0...14
2000 bytes	BIS M-122-02/A-SA2	■																					0...5
BIS M-300-00_-...																							
112 bytes	BIS M-115-03/A-SA2	■	■	■	■	■																	0...18
752 bytes	BIS M-101-01/L	■	■	■	■	■	■																0...22
752 bytes	BIS M-102-01/L	■	■	■	■	■	■	■															0...32
752 bytes	BIS M-105-01/A	■	■	■																			0...9
2000 bytes	BIS M-105-02/A	■	■	■	■																		0...11
2000 bytes	BIS M-108-02/L	■	■	■	■	■	■	■															0...30
8192 bytes	BIS M-108-20/A	■	■	■	■	■	■	■															0...30
2000 bytes	BIS M-110-02/L	■	■	■	■	■																	0...22
2000 bytes	BIS M-111-02/L	■	■	■	■	■	■																0...28
2000 bytes	BIS M-112-02/L	■	■	■	■	■	■	■	■	■													0...44
2000 bytes	BIS M-140-02/A-M_	■	■	■	■	■																	0...20
2000 bytes	BIS M-143-02/A-M_	■	■	■	■																		0...14
2000 bytes	BIS M-144-02/A-M_	■	■	■	■																		0...17
112 bytes	BIS M-102-03/L-H200	■	■	■	■	■																	0...18
BIS M-400-...-001-...																							
752 bytes	BIS M-101-01/L	■	■	■	■	■																	0...20
752 bytes	BIS M-102-01/L	■	■	■	■	■	■																0...28
752 bytes	BIS M-105-01/A	■	■																				0...7
2000 bytes	BIS M-105-02/A	■	■	■																			0...11
2000 bytes	BIS M-108-02/L	■	■	■	■	■	■																0...28
8192 bytes	BIS M-108-20/A	■	■	■	■	■	■																0...28
2000 bytes	BIS M-110-02/L	■	■	■	■	■																	0...20
2000 bytes	BIS M-111-02/L	■	■	■	■	■	■																0...28
2000 bytes	BIS M-112-02/L	■	■	■	■	■	■	■	■														0...38
BIS M-400-...-002-...																							
752 bytes	BIS M-101-01/L	■	■	■	■																		0...15
752 bytes	BIS M-102-01/L	■	■	■	■	■																	0...18
752 bytes	BIS M-105-01/A	■	■																				0...6
2000 bytes	BIS M-105-02/A	■	■	■																			0...9
752 bytes	BIS M-122-01/A	■																					0...5
2000 bytes	BIS M-122-02/A	■	■																				0...6
2000 bytes	BIS M-108-02/L	■	■	■	■	■																	0...20
8192 bytes	BIS M-108-20/A	■	■	■	■	■																	0...20
2000 bytes	BIS M-110-02/L	■	■	■	■																		0...15
2000 bytes	BIS M-111-02/L	■	■	■	■	■																	0...20
2000 bytes	BIS M-112-02/L	■	■	■	■	■	■	■	■														0...28
BIS M-301-00_-...																							
112 bytes	BIS M-115-03/A-SA2	■	■	■	■	■	■	■															0...30
112 bytes	BIS M-107-03/L-H200	■	■	■	■	■	■																0...28
752 bytes	BIS M-101-01/L	■	■	■	■	■	■	■															0...34
752 bytes	BIS M-102-01/L	■	■	■	■	■	■	■	■	■													0...45
2000 bytes	BIS M-108-02/L	■	■	■	■	■	■	■	■	■													0...45
8192 bytes	BIS M-108-20/A	■	■	■	■	■	■	■	■	■													0...45
2000 bytes	BIS M-110-02/L	■	■	■	■	■	■	■															0...32
2000 bytes	BIS M-111-02/L	■	■	■	■	■	■	■	■	■													0...45
2000 bytes	BIS M-112-02/L	■	■	■	■	■	■	■	■	■	■	■	■	■	■								0...70
752 bytes	BIS M-120-01/L	■	■	■	■	■	■	■	■	■	■												0...50
BIS M/VM-351-00_-...																							
2000 bytes	BIS M-150-02/A	■	■	■	■	■	■	■	■	■	■	■	■	■									0...65
2000 bytes	BIS M-151-02/A	■	■	■	■	■	■	■	■	■	■	■	■	■									0...65
112 bytes	BIS M-152-03/A	■	■	■	■	■	■	■															0...30
2000 bytes	BIS M-153-02/A	■	■	■	■	■	■	■	■	■	■	■	■	■	■	■	■	■					0...100
112 bytes	BIS M-154-03/A	■	■	■	■	■	■	■															0...30
8192 bytes	BIS M-155-20/A	■	■	■	■	■	■	■	■	■	■	■	■	■									0...65
8192 bytes	BIS M-156-20/A	■	■	■	■	■	■	■	■	■	■	■	■	■									0...65

BIS M Industrial RFID Systems

Selection criteria for read/write distances

Memory	Data carrier	mm
BIS M/VM-341-00_-...		
2000 bytes	BIS M-140-02/A-M_	0...40
2000 bytes	BIS M-112-02/L	35...90
2000 bytes	BIS M-108-02/L	0...50
8192 bytes	BIS M-108-20/A	0...50
2000 bytes	BIS M-142-02/A-M_	0...40
8192 bytes	BIS M-142-20/A-M8	0...40
2000 bytes	BIS M-143-02/A-M_	5...21
2000 bytes	BIS M-144-02/A-M_	0...40
BIS M-401-0_ _-...		
752 bytes	BIS M-101-01/L	0...28
752 bytes	BIS M-102-01/L	0...45
752 bytes	BIS M-120-01/L	0...50
2000 bytes	BIS M-108-02/L	0...40
8192 bytes	BIS M-108-20/A	0...40
2000 bytes	BIS M-110-02/L	0...30
2000 bytes	BIS M-111-02/L	0...40
2000 bytes	BIS M-112-02/L	0...60
2000 bytes	BIS M-140-02/A-M_	0...32
BIS M-451-0_ _-...		
2000 bytes	BIS M-150-02/A	0...65
2000 bytes	BIS M-151-02/A	0...65
112 bytes	BIS M-152-03/A	0...30
2000 bytes	BIS M-153-02/A	0...100
112 bytes	BIS M-154-03/A	0...30
8192 bytes	BIS M-155-20/A	0...65
8192 bytes	BIS M-156-20/A	0...65
BIS M-410-0_ _-...		
112 bytes	BIS M-132-03/L	0...48
112 bytes	BIS M-132-03/L-HT	0...40
736 bytes	BIS M-132-10/L	0...15
736 bytes	BIS M-132-10/L-HT	0...15
2000 bytes	BIS M-133-02/A	0...32
736 bytes	BIS M-134-10/L-HT	0...36
2000 bytes	BIS M-135-02/L	0...60
112 bytes	BIS M-135-03/L	0...68
112 bytes	BIS M-135-03/L-HT	0...20
992 bytes	BIS M-135-07/L	25...45
992 bytes	BIS M-135-07/L-HT	25...45
112 bytes	BIS M-136-03/L	0...85
112 bytes	BIS M-130-03/L	0...7
992 bytes	BIS M-130-07/L	0...10
BIS M-411-0_ _-...		
112 bytes	BIS M-132-03/L	0...80
112 bytes	BIS M-132-03/L-HT	0...70
736 bytes	BIS M-132-10/L	0...26
736 bytes	BIS M-132-10/L-HT	0...22
2000 bytes	BIS M-133-02/A	38...52
736 bytes	BIS M-134-10/L-HT	0...60
2000 bytes	BIS M-135-02/L	0...100
112 bytes	BIS M-135-03/L	0...110
112 bytes	BIS M-135-03/L-HT	0...125
992 bytes	BIS M-135-07/L	11...95
992 bytes	BIS M-135-07/L-HT	11...75
112 bytes	BIS M-136-03/L	0...155
992 bytes	BIS M-130-07/L	0...13
BIS M-352-001-S115		
2000 bytes	BIS M-191-02/A	0...22
112 bytes	BIS M-152-03/A	0...17
BIS M-305-001-S115		
752 bytes	BIS M-105-01/A	0...6
2000 bytes	BIS M-105-02/A	0...8
2000 bytes	BIS M-110-02/L	0...13
752 bytes	BIS M-122-01/A	0...5
2000 bytes	BIS M-122-02/A	0...7
2000 bytes	BIS M-108-02/L	0...17
2000 bytes	BIS M-140-02/A-M_	0...15
2000 bytes	BIS M-144-02/A-M_	0...13
BIS M-307-001-S115		
752 bytes	BIS M-105-01/A	0...6
2000 bytes	BIS M-105-02/A	0...8
2000 bytes	BIS M-110-02/L	0...13
752 bytes	BIS M-122-01/A	0...5
2000 bytes	BIS M-122-02/A	0...7
BIS VM-306-001-S4		
752 bytes	BIS M-105-01/A	0...5
2000 bytes	BIS M-105-02/A	0...6
112 bytes	BIS M-116-03/A	0...3
2000 bytes	BIS M-122-02/A	0...5
752 bytes	BIS M-105-01/A	0...6

BIS M Industrial RFID Systems

Selection criteria for read/write distances

Memory	Data carrier	mm
BIS VM-307-001-S4		
2000 bytes	BIS M-105-02/A	0...8
2000 bytes	BIS M-110-02/L	0...13
752 bytes	BIS M-122-01/A	0...5
2000 bytes	BIS M-122-02/A	0...7
2000 bytes	BIS M-140-02/A-M_	0...15
2000 bytes	BIS M-142-02/A-M_	0...13
2000 bytes	BIS M-143-02/A-M_	0...10
2000 bytes	BIS M-144-02/A-M_	0...13
BIS VM-352-001-S4		
2000 bytes	BIS M-191-02/A	0...22
BIS VM-305-001-S4		
752 bytes	BIS M-105-01/A	0...6
2000 bytes	BIS M-105-02/A	0...8
2000 bytes	BIS M-110-02/L	0...13
752 bytes	BIS M-122-01/A	0...5
2000 bytes	BIS M-122-02/A	0...7
2000 bytes	BIS M-108-02/L	0...17
8192 bytes	BIS M-108-20/A	0...17
2000 bytes	BIS M-140-02/A-M_	0...15
2000 bytes	BIS M-144-02/A-M_	0...13
BIS M-402-00_-002-...		
752 bytes	BIS M-105-01/A	0...5
2000 bytes	BIS M-105-02/A	0...5
752 bytes	BIS M-122-01/A	0...5
2000 bytes	BIS M-122-02/A	0...5
2000 bytes	BIS M-110-02/L	0...5
112 bytes	BIS M-116-03/A	0...7
160 bytes	BIS M-116-08/A	0...7
BIS M-402-00_-004-...		
752 bytes	BIS M-105-01/A	0...5
2000 bytes	BIS M-105-02/A	0...5
752 bytes	BIS M-122-01/A	0...5
2000 bytes	BIS M-122-02/A	0...5
2000 bytes	BIS M-110-02/L	0...15
BIS M-402-00_-005-...		
2000 bytes	BIS M-110-02/L	0...6
BIS M-350/350-...		
2000 bytes	BIS M-153-02/A	0...275
2000 bytes	BIS M-151-02/A	0...130
112 bytes	BIS M-107-03/L-H200	0...100
112 bytes	BIS M-135-03/L-HT	0...200
BIS M-450/440-...		
2000 bytes	BIS M-153-02/A	0...275
2000 bytes	BIS M-151-02/A	0...130
112 bytes	BIS M-107-03/L-H200	0...100
112 bytes	BIS M-135-03/L-HT	0...200
BIS M-370-000-A02		
112 bytes	BIS M-132-03/L-HT	0...57
112 bytes	BIS M-135-03/L	0...127
BIS M-371-000-A01		
112 bytes	BIS M-132-03/L	0...152
112 bytes	BIS M-132-03/L-HT	0...152
112 bytes	BIS M-135-03/L	0...230
112 bytes	BIS M-135-03/L/HT	0...257
112 bytes	BIS M-136-03/L	0...216
112 bytes	BIS M-136-03/L-HT	0...254
BIS M-372-000-A01		
112 bytes	BIS M-132-03/L	0...216
112 bytes	BIS M-132-03/L-HT	0...216
112 bytes	BIS M-135-03/L	0...350
112 bytes	BIS M-135-03/L-HT	0...381
112 bytes	BIS M-136-03/L	0...318
112 bytes	BIS M-136-03/L-HT	0...381
BIS M-373-000-A01		
112 bytes	BIS M-132-03/L	0...238
112 bytes	BIS M-132-03/L-HT	0...228
112 bytes	BIS M-135-03/L	0...380
112 bytes	BIS M-135-03/L-HT	0...406
112 bytes	BIS M-136-03/L	0...356
112 bytes	BIS M-136-03/L-HT	0...432

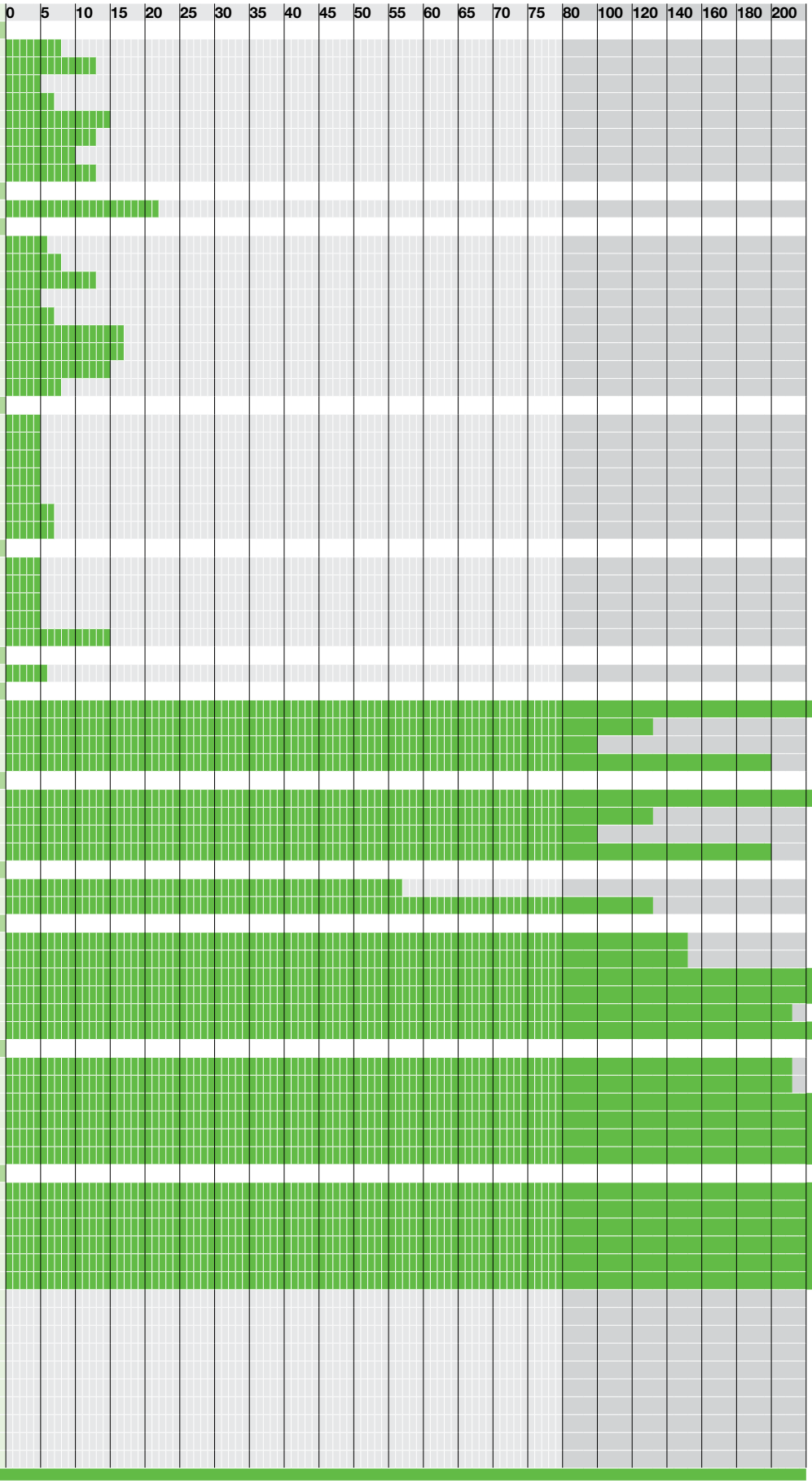

Selection criteria for read/write distances

Range of Applications
Selection Criteria
Data carriers

Barrel
Read/write heads
Read/write heads with integrated processor
Block
Read/write heads
Read/write heads with integrated processor
Remote
Read/write heads
Read/write heads with integrated processor

Long range
Read/write heads
Read/write heads with integrated processor
Controller
Antenna

Processors
Gateways
Handheld
Accessories

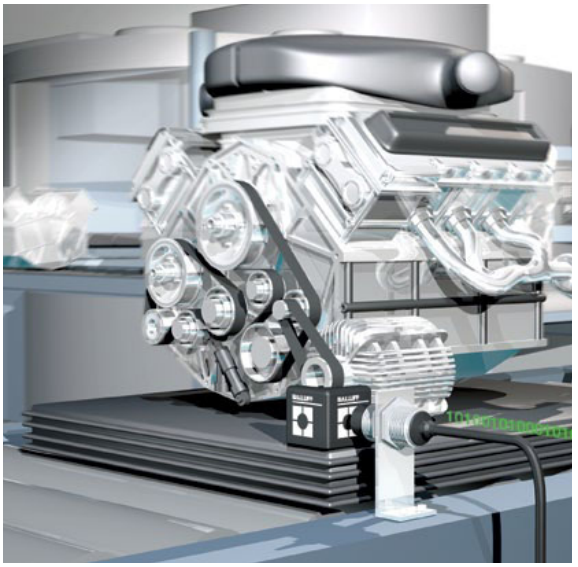

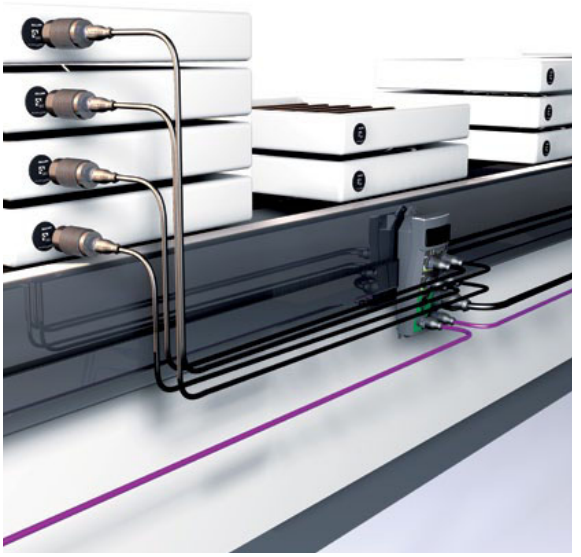

Simply attach data carrier
A single screw is enough – and the data carrier is firmly attached. Or simply glue it in place.

For reliable traceability
All data carriers have a 4-byte or 8-byte unique ID contained in the read/write memory. This number is read-only.

For greatest flexibility
Data carriers in various formats including wafer, cylinder, block or handy credit card format allow for a wide range of applications

Dimensions		**Ø 10×4.5**	**Ø 12×6**	
Housing material		PA12	EP	
Weight		< 1.5 g	< 1.5 g	

BIS M Programmable

112 bytes	**Ordering code**			
	Part number			
160 bytes	**Ordering code**			
	Part number			
752 bytes	**Ordering code**	**BIS0048**	**BIS0040**	
	Part number	BIS M-122-01/A**	BIS M-105-01/A**	
992 bytes	**Ordering code**			
	Part number			
2000 bytes	**Ordering code**	**BIS004A**	**BIS0042**	
	Part number	BIS M-122-02/A*	BIS M-105-02/A*	
Operating temperature		0...+70 °C	–25...+70 °C	
Storage temperature		–25...+85 °C	–25...+85 °C	
Protection per IEC 60529		IP 67	IP 67	

Appropriate read/write head with max. read/write distance

Mounting					
BIS M-300				0-11 mm	
BIS M-301					
BIS M-302	0-6 mm	0-9 mm	0-6 mm	0-9 mm	
BIS M-304	0-5 mm	0-7 mm	0-5 mm	0-7 mm	
BIS M 410					
BIS M 411					
BIS VM-306		0-2 mm		0-3 mm	

For installation see technical section.

Supported standard
* ISO 15693
**ISO 14443

Mounting (see technical section for details):

flush in steel

non-flush on steel

non-metal

Antenna type:

rod

round

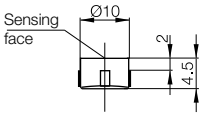

glue into hole Ø 10 H11

DIN 69 873

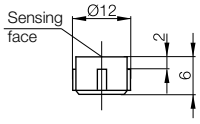

glue into hole Ø 12 H11

	Ø 8×5	**Ø 8×5**	**Ø 6×1.00**	**Ø 20×2.5**
	ABS	ABS	EP	PA6
	0.5 g	0.5 g	0.6 g	< 1.3 g
	BIS00YL		**BIS00UC**	
	BIS M-130-03/L*		BIS M-116-03/A*	
			BIS00UE	
			BIS M-116-08/A*	
		BIS00YK		
		BIS M-130-07/L*		
				BIS0044
				BIS M-110-02/L*
	-20...+85 °C	-20...+85 °C	0...+50 °C	–25...+85 °C
	-40...+85 °C	-40...+85 °C	-20...+90 °C	–40...+90 °C (100 h at 140 °C)
	IP 67	IP 67	IP 67	IP 67
				0-22 mm
				0-32 mm
				0-16 mm
				0-14 mm
	0-7 mm	0-10 mm		
		0-13 mm		
			0-7 mm	0-4.5 mm

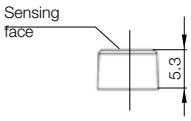

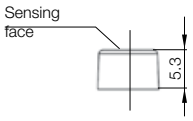

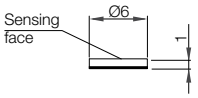

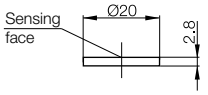

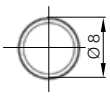

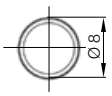

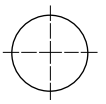

Range of Applications
Selection Criteria
Data carriers
Barrel
Read/write heads
Read/write heads with integrated processor
Block
Read/write heads
Read/write heads with integrated processor
Remote
Read/write heads
Read/write heads with integrated processor
Long range
Read/write heads
Read/write heads with integrated processor
Controller
Antenna
Processors
Gateways
Handheld
Accessories

Simply attach data carrier
A single screw is enough – and the data carrier is firmly attached. Or simply glue it in place.

For reliable traceability
All data carriers have a 4-byte or 8-byte unique ID contained in the read/write memory. This number is read-only.

For greatest flexibility
Data carriers in various formats including wafer, cylinder, block or handy credit card format allow for a wide range of applications

Dimensions		**Ø 25×5**
Housing material		ABS
Weight		2 g

BIS M Programmable

112 bytes	**Ordering code**	**BIS00YF**
	Part number	BIS M-132-03/L*
736 bytes	**Ordering code**	
	Part number	
752 bytes	**Ordering code**	
	Part number	
2000 bytes	**Ordering code**	
	Part number	
Operating temperature		–20...+85 °C
Storage temperature		–40...+85 °C
Protection per IEC 60529		IP 68

Appropriate read/write head with max. read/write distance

Mounting	▬
BIS M-300	
BIS M-301	
BIS M-302	
BIS M-304	
BIS M-410	0-48
BIS M-411	0-80 mm

For installation see technical section.

Supported standard
* ISO 15693
**ISO 14443

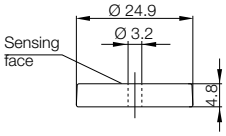

Mounting (see technical section for details):

▬ flush in steel

▬ non-flush on steel

▬ non-metal

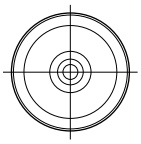

Antenna type:

rod

round

Ø 25×5	**Ø 30×10**	**Ø 30×1.6**	**Ø 30×2.5**
ABS	PA	EP	PA6
3 g	10 g	< 1.6 g	< 3.0 g
BIS00YC			
BIS M-132-10/L**			
		BIS003Y	
		BIS M-101-01/L**	
	BIS00Y9		**BIS0045**
	BIS M-133-02/A*		BIS M-111-02/L*
–20...+85 °C	–40...+85 °C	–25...+70 °C	–25...+85 °C
–40...+85 °C	–40...+85 °C	–40...+85 °C	–40...+90 °C (100 h at 140 °C)
IP 68	IP 67	IP 67	IP 67
—	—	—	—
		0-22 mm	0-28 mm
		0-34 mm	0-45 mm
		0-16 mm	0-20 mm
		0-14 mm	
0-15 mm	0-32 mm		
0-26 mm	38-52 mm		

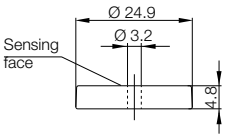

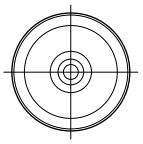

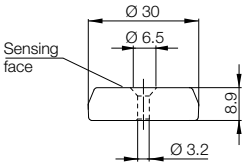

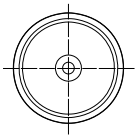

Tightening torque max. 0.75 Nm

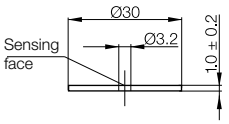

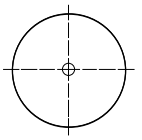

Tightening torque max. 1 Nm

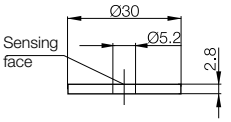

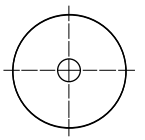

Tightening torque max. 1 Nm

Range of Applications
Selection Criteria
Data carriers
Barrel
Read/write heads
Read/write heads with integrated processor
Block
Read/write heads
Read/write heads with integrated processor
Remote
Read/write heads
Read/write heads with integrated processor
Long range
Read/write heads
Read/write heads with integrated processor
Controller
Antenna
Processors
Gateways
Handheld
Accessories

For greatest flexibility
Data carriers in various formats including wafer, cylinder, block or handy credit card format allow for a wide range of applications

For reliable traceability
All data carriers have a 4-byte unique ID contained in the read/write memory. This number is read-only.

Dimensions		
Housing material		
Weight		

BIS M Programmable

752 bytes	**Ordering code**	
	Part number	
2000 bytes	**Ordering code**	
	Part number	
Operating temperature		
Storage temperature		
Protection per IEC 60529		

Appropriate read/write head with max. read/write distance

Mounting	
BIS M-300	
BIS M-301	
BIS M-302	
BIS M-304	

For installation see technical section.

Supported standard
* ISO 15693
**ISO 14443

Mounting (see technical section for details):

flush in steel

non-flush on steel

non-metal

Antenna type:

rod

round

	Ø 50×1.6	**50×3 mm**
	EP	PA6
	< 2.5 g	< 9.5 g

	BIS003Z	
	BIS M-102-01/L**	
		BIS0046
		BIS M-112-02/L*
	–25...+70 °C	–25...+85 °C
	–25...+85 °C	–40...+90 °C (100 h at 140 °C)
	IP 67	IP 67

	▬	▬
	0-32 mm	0-44 mm
	0-45 mm	0-70 mm
	0-20 mm	0-30 mm
	0-18 mm	

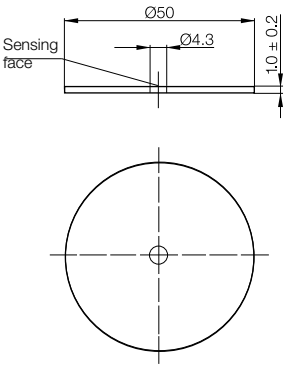

Tightening torque max. 2.5 Nm

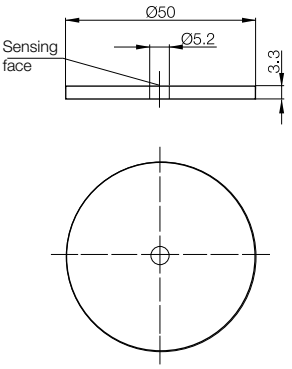

Tightening torque max. 5.9 Nm

Range of Applications
Selection Criteria
Data carriers

Barrel
Read/write heads
Read/write heads with integrated processor
Block
Read/write heads
Read/write heads with integrated processor
Remote
Read/write heads
Read/write heads with integrated processor

Long range
Read/write heads
Read/write heads with integrated processor
Controller
Antenna

Processors
Gateways
Handheld
Accessories

Rectangular Type

For greatest flexibility
Data carriers in various formats including wafer, cylinder, block or handy credit card format allow for a wide range of applications

For reliable traceability
All data carriers have a 4-byte unique ID contained in the read/write memory. This number is read-only.

Dimensions		
Housing material		
Weight		

BIS M Programmable

112 bytes	**Ordering code**	
	Part number	
992 bytes	**Ordering code**	
	Part number	
2000 bytes	**Ordering code**	
	Part number	
Operating temperature		
Storage temperature		
Protection per IEC 60529		

Appropriate read/write head with max. read/write distance

Mounting	
BIS M-410	
BIS M-411	

For installation see technical section.

Supported standard
* ISO 15693

Mounting (see technical section for details):

flush in steel

non-flush on steel

non-metal

Antenna type:

rod

round

	51.5x51.5x6.5 mm	**51.5x51.5x6.5 mm**	**51.5x51.5x6.5 mm**
	ABS	ABS	ABS
	18 g	25 g	25 g
		BIS00Y5	
		BIS M-135-03/L*	
			BIS00Y3
			BIS M-135-07/L*
	BIS00Y6		
	BIS M-135-02/L*		
	–40...+85 °C	–55...+85 °C	–40...+85 °C
	–40...+85 °C	–55...+140 °C	–40...+125 °C
	IP 67	IP 67	IP 67
	—	—	—
	0-60 mm	0-68 mm	23-46 mm
	0-100 mm	0-110 mm	11-95 mm

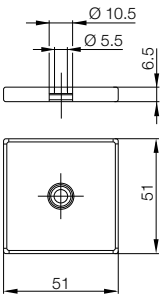

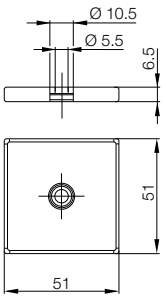

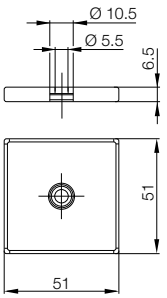

Range of Applications
Selection Criteria
Data carriers

Barrel
Read/write heads
Read/write heads with integrated processor
Block
Read/write heads
Read/write heads with integrated processor
Remote
Read/write heads
Read/write heads with integrated processor

Long range
Read/write heads
Read/write heads with integrated processor
Controller
Antenna

Processors
Gateways
Handheld
Accessories

Rectangular Type

Dimensions		**52×32×11 mm**	**128x52x11 mm**	
Housing material		PBT	ABS	
Weight		< 27.0 g	46 g	

BIS M Programmable

112 bytes	**Ordering code**		**BIS00W9**	
	Part number		BIS M-136-03/L*	
752 bytes	**Ordering code**			
	Part number			
2000 bytes	**Ordering code**	**BIS0043**		
	Part number	BIS M-108-02/L*		
8192 bytes***	**Ordering code**	**BIS0777**		
	Part number	BIS M-108-20/A***		
Operating temperature		–25...+70 °C	–20...+85 °C	
Storage temperature		–25...+85 °C	–40...+85 °C	
Protection per IEC 60529		IP 67	IP 67	

Appropriate read/write head with max. read/write distance

Mounting				
BIS M-300 / BIS VM-300	0-16 mm	0-30 mm		
BIS M-301 / BIS VM-301		0-45 mm		
BIS M-302	0-12 mm	0-20 mm		
BIS M-304	0-10 mm	0-18 mm		
BIS M410			0-85 mm	
BIS M411			0-155 mm	

For installation see technical section.

Supported standard
* ISO 15693
** ISO 14443
***First 2 kbytes are ISO 15693 compatible. Only for use with BIS VM or 32 byte IO-Link heads.

Mounting (see technical section for details):

flush in steel

non-flush on steel

non-metal

Antenna type:

rod

round

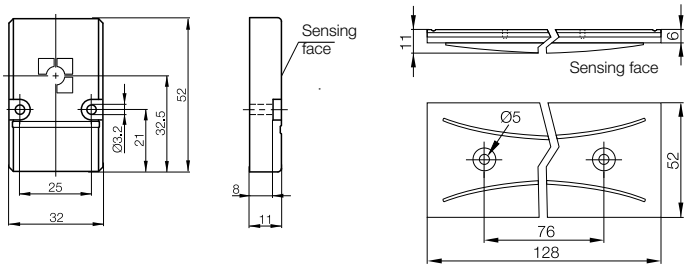

For greatest flexibility
Data carriers in various formats including wafer, cylinder, block or handy credit card format allow for a wide range of applications

For reliable traceability
All data carriers have a 4-byte unique ID contained in the read/write memory. This number is read-only.

Data carriers read/write

with adhesive

without adhesive

	65×25×3 mm	**65×25×3 mm**	**85.6×54×0.76 mm**
	EP + PVC	EP + PVC	PVC
	7,00 g	7,00 g	< 5.8 g

	BIS00KM	**BIS00RZ**	
	BIS M-115-03/A*	BIS M-115-03/A-SA2*	
			BIS0047
			BIS M-120-01/L**
	-25 °C...+50 °C	-25 °C...+50 °C	–25...+70 °C
	-30 °C...+60 °C	-30 °C...+60 °C	–25...+70 °C
	IP 65	IP 65	IP 67

	0-18 mm	0-22 mm	0-18 mm	0-22 mm	
	0-30 mm	0-38 mm	0-30 mm	0-38 mm	0-50 mm

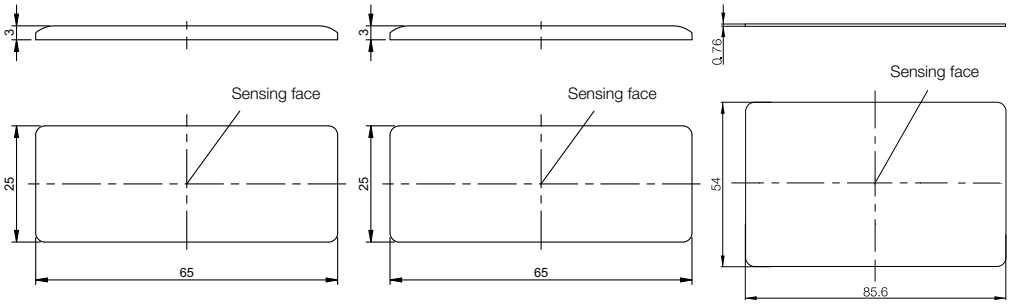

Range of Applications
Selection Criteria
Data carriers

Barrel
Read/write heads
Read/write heads with integrated processor
Block
Read/write heads
Read/write heads with integrated processor
Remote
Read/write heads
Read/write heads with integrated processor

Long range
Read/write heads
Read/write heads with integrated processor
Controller
Antenna

Processors
Gateways
Handheld
Accessories

FERRIODENT/Metal Mount

Dimensions		**4x22 mm**	
Housing material		Glass	
Weight		0,60 g	

BIS M Programmable

112 bytes	**Ordering code**	**BIS00M2**	
	Part number	BIS M-152-03/A*	
2000 bytes	**Ordering code**		
	Part number		
Operating temperature		-25...+85 °C	
Storage temperature		-25...+85 °C	
Protection per IEC 60529		IP 67	

Appropriate read/write head with max. read/write distance

Mounting			
BIS M-304			
BIS M-352		0...10 mm	
BIS M-341		0...30 mm	
BIS M-351		0...30 mm	0...17 mm

For installation see technical section.

Supported standard
* ISO 15693
**See page 129 for housing accessories

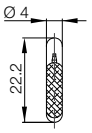

Mounting (see technical section for details):

flush in steel

non-flush on steel

non-metal

Antenna type:

rod

round

For greatest flexibility
Data carriers in various formats including wafer, cylinder, block or handy credit card format allow for a wide range of applications

For reliable traceability
All data carriers have a 4-byte unique ID contained in the read/write memory. This number is read-only.

FERRIODENT/ Metal Mount

FERRIODENT/ Metal Mount

	Ø 8×35	**24x24x21 mm**	**Ø 15×50**
	PA66-GF30	PBT	POM/PA12
	2,00 g	18 g	< 1.98 g
	BIS00P1		
	BIS M-154-03/A*		
		BIS00NZ	**BIS0049**
		BIS M-191-02/A*	BIS M-122-01/A-ZC1**
	-25...+85 °C	-25...+70 °C	–25...+70 °C
	-25...+85 °C	-25...+85 °C	–25...+85 °C
	IP 67	IP 67	IP 67
	—	—	—
			0-5 mm
	0...10 mm	0...14 mm	
	0...30 mm		
	0...30 mm		

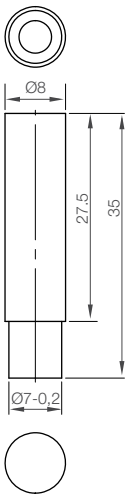

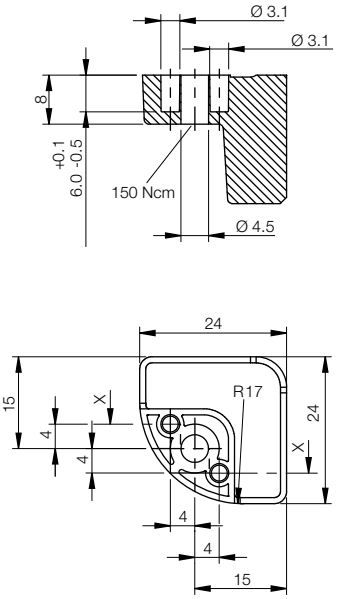

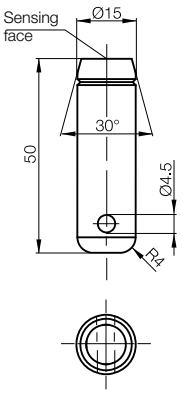

Range of Applications
Selection Criteria
Data carriers
Barrel
Read/write heads
Read/write heads with integrated processor
Block
Read/write heads
Read/write heads with integrated processor
Remote
Read/write heads
Read/write heads with integrated processor
Long range
Read/write heads
Read/write heads with integrated processor
Controller
Antenna
Processors
Gateways
Handheld
Accessories

Dimensions		**M6**	
Housing material		Steel, coated/PA12-GF30	
Weight		12 g	

BIS M Programmable

2000 bytes	**Ordering code**	**BIS00T1**	
	Part number	BIS M-122-02/A-SA2*	
8192 bytes**	**Ordering code**		
	Part number		
Operating temperature		-25 °C...+70 °C	
Storage temperature		-25 °C...+95 °C	
Protection per IEC 60529/DIN 40050		IP 68/69k	

Appropriate read/write head with max. read/write distance

Mounting	▬	
BIS M-300		
BIS M-302		
BIS M-304	0-5 mm	
VM-307		
BIS M-341/VM-341		

For installation see technical section.

Supported standard
* ISO 15693
** First 2 kbytes are ISO 15693 compatible. Only for use with BIS VM or 32 byte IO-Link heads.

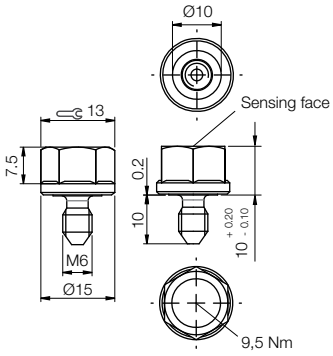

Mounting (see technical section for details):

▬ flush in steel

▬ non-flush on steel

▬ non-metal

Antenna type:

rod

round

	M6	**M8**	**M6**	**M8**
	Steel, coated/PA12-GF30	Steel, coated/PA12-GF30	Steel, coated/PA12-GF30	Steel, coated/PA12-GF30
	17 g	18 g	15 g	16 g
	BIS00NU	**BIS00NW**	**BIS00PT**	**BIS00PU**
	BIS M-143-02/A-M6*	BIS M-143-02/A-M8*	BIS M-142-02/A-M6-GY*	BIS M-142-02/A-M8-GY*
				BIS0119
				BIS M-142-20/A-M8-GY**
	-25 °C...+70 °C	-25 °C...+70 °C	-25 °C...+70 °C	-25 °C...+70 °C
	-25 °C...+95 °C	-25 °C...+95 °C	-25 °C...+95 °C	-25 °C...+95 °C
	IP 68	IP 68/69k	IP 68/69k	IP 68/69k
	0-14 mm	0-14 mm		
	0-10 mm	0-10 mm	0-14 mm	0-14 mm
	0-10 mm	0-10 mm	0-13 mm	0-13 mm
	5-21 mm	5-21 mm	0-40 mm	0-40 mm

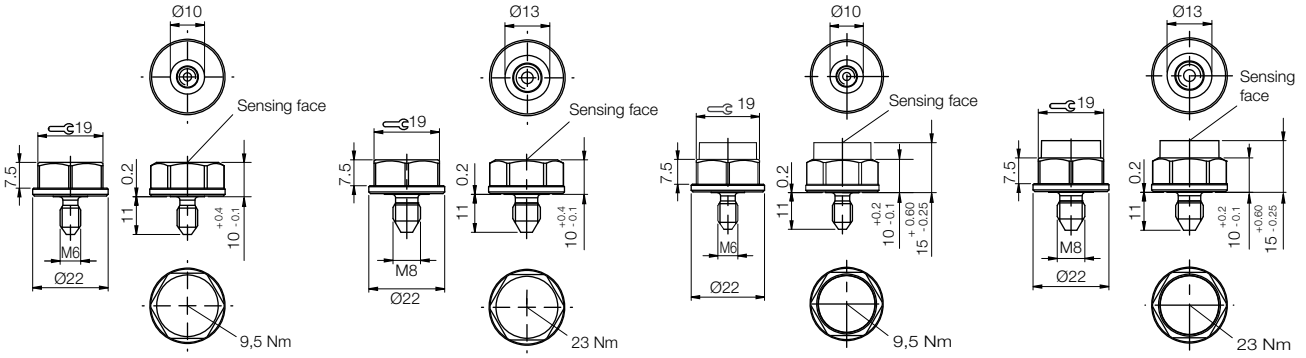

Range of Applications
Selection Criteria
Data carriers

Barrel
Read/write heads
Read/write heads with integrated processor
Block
Read/write heads
Read/write heads with integrated processor
Remote
Read/write heads
Read/write heads with integrated processor

Long range
Read/write heads
Read/write heads with integrated processor
Controller
Antenna

Processors
Gateways
Handheld
Accessories

Dimensions	
Housing material	
Weight	

BIS M Programmable

2000 bytes	**Ordering code**	
	Part number	
Operating temperature		
Storage temperature		
Protection per IEC 60529/DIN 40050		

Appropriate read/write head with max. read/write distance

Mounting	
BIS M-300/VM-300	
BIS M-302	
BIS M-305/VM305	
BIS VM-307	
BIS M-341/VM-341	
BIS M-400	

For installation see technical section.

Supported standard
* ISO 15693
** First 2 kbytes are ISO 15693 compatible. Only for use with BIS VM or 32 byte IO-Link heads.

Mounting (see technical section for details):

flush in steel

non-flush on steel

non-metal

Antenna type:

rod

round

	M6	**M8**	**M6**	**M8**
	Steel, coated/PA12-GF30	Steel, coated/PA12-GF30	Steel, coated/PA12-GF30	Steel, coated/PA12-GF30
	17 g	18 g	16 g	17 g
	BIS00M9	**BIS00M8**	**BIS00R4**	**BIS00R5**
	BIS M-140-02/A-M6*	BIS M-140-02/A-M8*	BIS M-144-02/A-M6-GY*	BIS M-144-02/A-M8-GY*
	-25 °C...+70 °C	-25 °C...+70 °C	-25 °C...+70 °C	-25 °C...+70 °C
	-25 °C...+95 °C	-25 °C...+95 °C	-25 °C...+95 °C	-25 °C...+95 °C
	IP 68/69k	IP 68/69k	IP 68/69k	IP 68/69k
	0-20 mm	0-20 mm	0-17 mm	0-17 mm
	0-14 mm	0-14 mm	0-14 mm	0-14 mm
	0-15 mm	0-15 mm	0-13 mm	0-13 mm
	0-15 mm	0-15 mm	0-13 mm	0-13 mm
			0-40 mm	0-40 mm
	0-32 mm	0-32 mm		

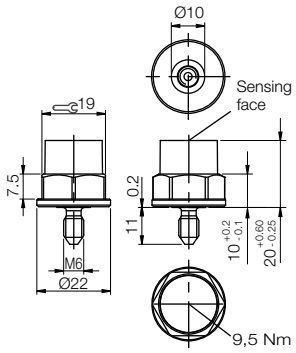

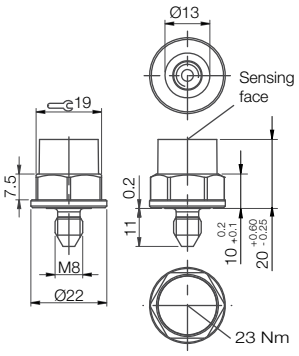

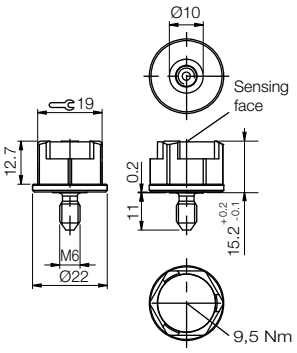

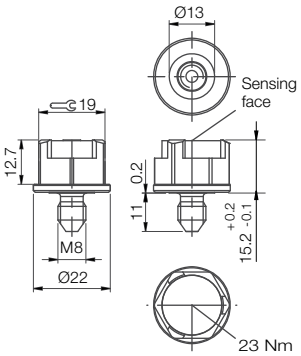

Range of Applications
Selection Criteria
Data carriers
Barrel
Read/write heads
Read/write heads with integrated processor
Block
Read/write heads
Read/write heads with integrated processor
Remote
Read/write heads
Read/write heads with integrated processor
Long range
Read/write heads
Read/write heads with integrated processor
Controller
Antenna
Processors
Gateways
Handheld
Accessories

Dimensions		**40×22×6.5 mm**	**40×22×6.5 mm**
Housing material		PPS-GF40	PPS-GF40
Weight		< 8.0 g	< 8.0 g

BIS M Programmable

2000 bytes	**Ordering code**	**BIS004F**	**BIS004H**
	Part number	BIS M-150-02/A*	BIS M-151-02/A*
8192 bytes	**Ordering code**		
	Part number		
Operating temperature		–25...+70 °C	–25...+70 °C
Storage temperature		–25...+130 °C	–25...+130 °C
Protection per IEC 60529		IP 67	IP 67

Appropriate read/write head with max. read/write distance

Mounting		
BIS M-350	0-130 mm	0-130 mm
BIS M-351	0-65 mm	0-65 mm
BIS M-450	0-130 mm	0-130 mm
BIS M-451	0-65 mm	0-65 mm

For installation see technical section.

Supported standard
* ISO 15693
** First 2 kbytes are ISO 15693 compatible. Only for use with BIS VM or 32 byte IO-Link heads.

Mounting (see technical section for details):

flush in steel

non-flush on steel

non-metal

Antenna type:

rod

round

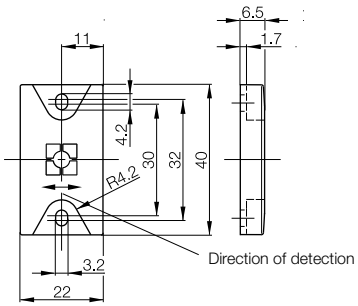

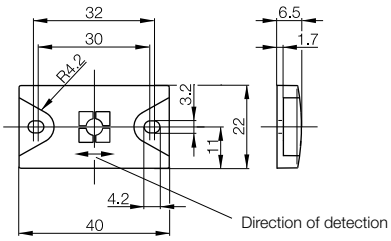

For maximum data security in all environments – even on metal.

For reliable traceability
All data carriers have a 4-byte unique ID contained in the read/write memory. This number is read-only.

Metal mounting plate 40×22 mm
BIS Z-MP-001
Please order separately.
(10 to a package) Required if no metal substrate is used.

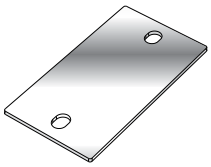

Data carriers read/write – mount on steel

	40×22×6.5 mm	**40×22×6.5 mm**	**80x40x22 mm**
	PPS (fiberglass reinforced)	PPS (fiberglass reinforced)	POM
	9 g	9 g	95 g
			BIS00P3
			BIS M-153-02/A*
	BIS0117	**BIS0112**	**BIS010R**
	BIS M-155-20/A**	BIS M-156-20/A**	BIS M-153-20/A**
	–25...+70 °C	–25...+70 °C	–25...+85 °C
	–25...+130 °C	–25...+130 °C	–25...+85 °C
	IP 67	IP 67	IP 68
			0-275 mm / 0-90 mm
	0-65 mm	0-65 mm	0-100 mm
			0-275 mm
			0-100 mm

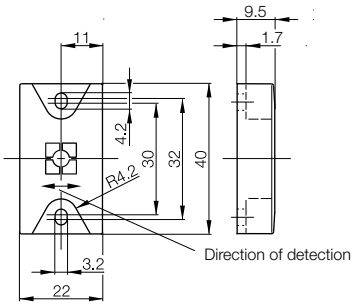

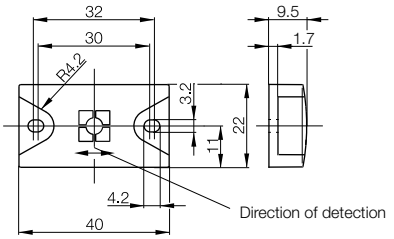

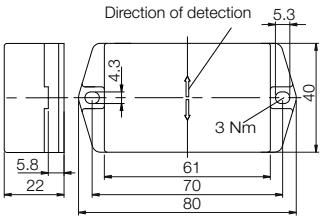

Range of Applications
Selection Criteria
Data carriers
Barrel
Read/write heads
Read/write heads with integrated processor
Block
Read/write heads
Read/write heads with integrated processor
Remote
Read/write heads
Read/write heads with integrated processor
Long range
Read/write heads
Read/write heads with integrated processor
Controller
Antenna
Processors
Gateways
Handheld
Accessories

High Temperature Type

Dimensions		**Ø 25x5**	**Ø 25x5**	**Ø 50x5**
Housing material		PPS	PPS	PPS
Weight		4 g	4 g	17 g
BIS M Programmable				
112 bytes	**Ordering code**	**BIS00YE**		
	Part number	BIS M-132-03/L-HT*		
736 bytes	**Ordering code**		**BIS00YA**	**BIS00Y7**
	Part number		BIS M-132-10/L-HT**	BIS M-134-10/L-HT**
992 bytes	**Ordering code**			
	Part number			
Operating temperature		-40...+93 °C	-40...+93 °C	-40...+93 °C
Storage temperature		-40...+220 °C	-40...+220 °C	-40...+220 °C
Storage temperature extended				
Protection per IEC 60529		IP 67	IP 67	IP 67
Appropriate read/write head with max. read/write distance				
Mounting				
BIS M-300 / BIS VM-300				
BIS M-301 / BIS VM-301				
BIS M-410		0-40 mm	0-15 mm	0-36 mm
BIS M-411		0-70 mm	0-22 mm	0-60 mm

For installation see technical section.

Supported standard
* ISO 15693
**ISO 14443

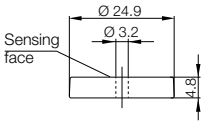

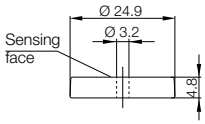

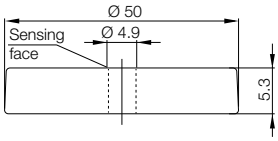

Mounting (see technical section for details):

flush in steel

non-flush on steel

non-metal

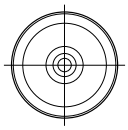
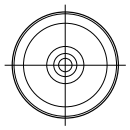
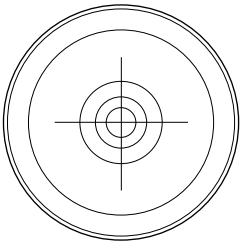

Antenna type:

rod

round

	51.5x51.5x6.5 mm	**51.5x51.5x6.5 mm**	**40x22x6.5 mm**	**128x52x11 mm**
	PPS	PPS	PPS-GF40	PPS
	25 g	25 g	6,00 g	68 g
	BIS00Y4		**BIS00LC**	**BIS00Y1**
	BIS M-135-03/L-HT*		BIS M-107-03/L-H200*	BIS M-136-03/L-HT*
		BIS00Y2		
		BIS M-135-07/L-HT*		
	-40...+93 °C	-40...+93 °C	-25...+70 °C	-40...+93 °C
	-40...+220 °C	-40...+220 °C	-25...+85 °C	-40...+220 °C
			200° C (1000 h tested)	
	IP 67	IP 67	IP 68/x9K	IP 67
	—	—	—	—
			0-18 mm	
			0-28 mm	
	0-70 mm	23-46 mm		0-185 mm
	0-125 mm	11-75 mm		

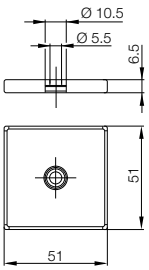

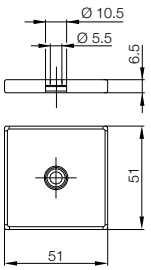

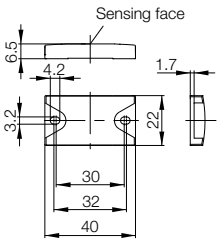

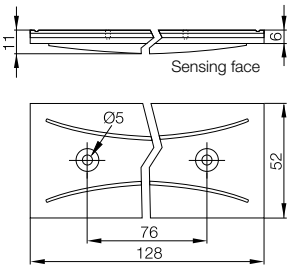

Range of Applications
Selection Criteria
Data carriers
Barrel
Read/write heads
Read/write heads with integrated processor
Block
Read/write heads
Read/write heads with integrated processor
Remote
Read/write heads
Read/write heads with integrated processor
Long range
Read/write heads
Read/write heads with integrated processor
Controller
Antenna
Processors
Gateways
Handheld
Accessories

**Small size –
big performance**

Broad selection range
Read/write heads in various form factors offer wide application possibilities. Simply choose according to your application.

Dimensions		
Housing material		
For standard processors	**Ordering code**	
	Part number	
For BIS M-407 processors	**Ordering code**	
	Part number	
Mounting		
Operating temperature		
Storage temperature		
Protection per IEC 60529		
Connection to		
Connection cable		

Installation note for data carriers

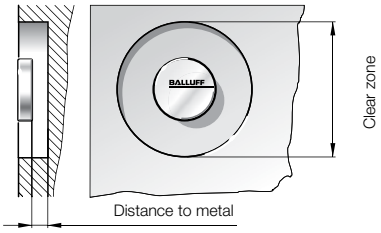

Appropriate data carrier		
Data carrier to metal distance in mm		
Data carrier clear zone in mm		
Write distance in mm		
Read distance in mm		
Offset in mm at distance	0 mm	
	5 mm	
	9 mm	
	12 mm	
	15 mm	
	16 mm	
	18 mm	
	20 mm	
	22 mm	
	25 mm	
	30 mm	

For installation see technical section.

* For use only with processor BIS M-407-039-06-S115. See page 109.

Mounting (see technical section for details):

flush in steel

non-flush on steel

non-metal

Antenna type:

rod

round

M18																										
Nickel plated brass																										
BIS0057																										
BIS M-302-001-S115																										
BIS0059																										
BIS M-302-003-S115*																										
0...+70 °C																										
–20...+85 °C																										
IP 67																										
Processor																										
See Connectivity section for cable options																										
BIS003Y	BIS M-101-01/L	**BIS003Z**	BIS M-102-01/L	**BIS0040**	BIS M-105-01/A	**BIS0042**	BIS M-105-02/A	**BIS0048**	BIS M-122-01/A	**BIS004A**	BIS M-122-02/A	**BIS0043**	BIS M-108-02/L	**BIS0044**	BIS M-110-02/L	**BIS0045**	BIS M-111-02/L	**BIS0046**	BIS M-112-02/L	**see data carriers**	BIS M-140-02/A-M_	**see data carriers**	BIS M-142-02/A-M_	**see data carriers**	BIS M-143-02/A-M_	**see data carriers**	BIS M-144-02/A-M_
> 25	> 5	> 50	> 10	> 10	> 0	> 10	> 0	> 10	> 0	> 10	> 0	> 25	> 0	> 25	> 5	> 25	> 5	> 50	> 20	> 0		> 0		> 0		> 0	
> 60	> 50	> 60	> 50	> 60	> 0	> 60	> 0	> 60	> 0	> 60	> 0	> 60	> 0	> 80	> 50	> 80	> 50	> 150	> 70	> 100		> 100		> 100		> 100	
0-16	0-10	0-20	0-10	0-7	0-5	0-9	0-6	0-7	0-5	0-9	0-6	0-20	0-12	0-16	0-8	0-20	0-5	0-30	0-12	0-14		0-14		0-10		0-14	
0-16	0-10	0-20	0-10	0-7	0-5	0-9	0-6	0-7	0-5	0-9	0-6	0-20	0-12	0-16	0-8	0-20	0-5	0-30	0-12	0-14		0-14		0-10		0-14	
±10	±4	±18	±8	±5	±4	±5	±5	±4	±3	±4	±3	±14	±10	±8	±4	±12	±7	±20	±14	±8		±8		±5		±6	
±10	±4	±18	±6	±4	±3	±5	±3.5	±3	±2	±3	±2	±12	±8	±8	±4	±12	±4	±20	±14	±8		±8		±5		±6	
±10	±2	±16	±4			±3.5						±12	±6	±6		±10		±18	±10	±8		±8		±3		±6	
±8		±14										±10	±4	±4		±10		±18	±6	±8		±8				±6	
±7		±12										±10		±4		±10		±18									
±4		±10										±7		±3		±5		±16									
		±8										±7				±5		±16									
		±4										±5				±5		±16									
																		±12									
																		±12									
																		±8									

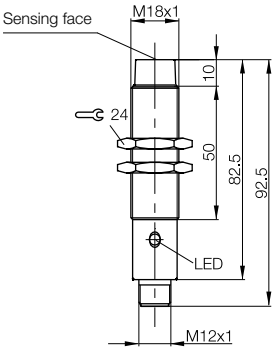

Range of Applications
Selection Criteria
Data carriers
Barrel
Read/write heads
Read/write heads with integrated processor
Block
Read/write heads
Read/write heads with integrated processor
Remote
Read/write heads
Read/write heads with integrated processor
Long range
Read/write heads
Read/write heads with integrated processor
Controller
Antenna
Processors
Gateways
Handheld
Accessories

M18 housing with extra
small read/write head:
just 14mm provides security
(in tool identification, for example).

Dimensions		
Housing material		
For standard processors	**Ordering code**	
	Part number	
For BIS M-407 processors	**Ordering code**	
	Part number	
Mounting		
Operating temperature		
Storage temperature		
Protection per IEC 60529		
Connection to		
Connection cable		

Installation note for data carriers

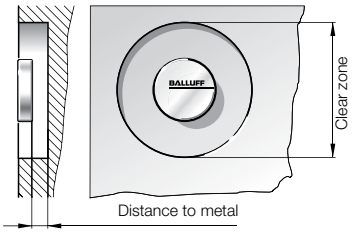

Appropriate data carrier		
Data carrier to metal distance in mm		
Data carrier clear zone in mm		
Write distance in mm		
Read distance in mm		
Offset in mm at distance	0 mm	
	5 mm	
	9 mm	
	12 mm	
	15 mm	
	16 mm	
	18 mm	

For installation see technical section.

* For use only with processor BIS M-407-039-06-S115. See page 109.

Mounting (see technical section for details):

flush in steel

non-flush on steel

non-metal

Antenna type:

rod

round

M18																											
Nickel plated brass																											
BIS005A																											
BIS M-304-001-S115																											
BIS008P																											
BIS M-304-003-S115*																											
0...+70 °C																											
–20...+85 °C																											
IP 67																											
Processor																											
See Connectivity section for cable options																											
BIS003Y	BIS M-101-01/L	**BIS003Z**	BIS M-102-01/L	**BIS0040**	BIS M-105-01/A	**BIS0042**	BIS M-105-02/A	**BIS0048**	BIS M-122-01/A	**BIS004A**	BIS M-122-02/A	**BIS0043**	BIS M-108-02/L	**BIS0044**	BIS M-110-02/L	**BIS00T1**	BIS M-122-02/A-SA2										
> 25	> 5	> 50	> 10	> 10	> 0	> 10	> 0	> 10	> 0	> 10	> 0	> 25	> 0	> 25	> 5	> 0											
> 60	> 50	> 60	> 50	> 60	> 0	> 60	> 0	> 60	> 0	> 60	> 0	> 60	> 0	> 80	> 50	> 0											
0-14	0-8	0-18	0-10	0-5	0-5	0-7	0-6	0-5	0-4	0-7	0-5	0-18	0-10	0-14	0-8	0-5											
0-14	0-8	0-18	0-10	0-5	0-5	0-7	0-6	0-5	0-4	0-7	0-5	0-18	0-10	0-14	0-8	0-5											
±10	±4	±18	±8	±5	±4	±5	±5	±4	±2	±4	±3	±14	±10	±8	±4	±3											
±10	±4	±18	±6	±4	±3	±5	±3.5	±3		±3	±2	±12	±8	±8	±4	±2											
±10		±16	±4			±3						±12	±6	±6													
±8		±14										±10		±4													
		±12										±10															
		±10										±7															
		±8										±5															

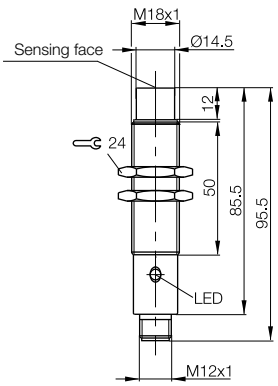

Range of Applications
Selection Criteria
Data carriers
Barrel
Read/write heads
Read/write heads with integrated processor
Block
Read/write heads
Read/write heads with integrated processor
Remote
Read/write heads
Read/write heads with integrated processor
Long range
Read/write heads
Read/write heads with integrated processor
Controller
Antenna
Processors
Gateways
Handheld
Accessories

The large diameter of these tubular read/write heads enables generous distances to the object.

Dimensions		**M30**
Housing material		Nickel plated brass
For standard processor	**Ordering code**	**BIS0053**
	Part number	BIS M-300-001-S115
For BIS M-407 processor	**Ordering code**	**BIS0054**
	Part number	BIS M-300-003-S115*
For BIS V processor	**Ordering code**	**BIS00RF**
New Generation**	Part number	BIS VM-300-001-S4
Mounting		
Operating temperature		0...+70 °C
Storage temperature		–20...+85 °C
Protection per IEC 60529		IP 67
Connection to		Processor
Connection cable		See Connectivity section for cable options

Installation note for data carriers

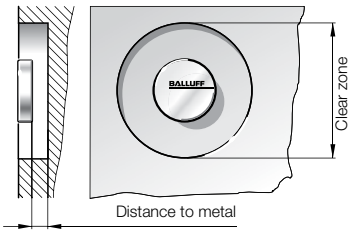

Appropriate data carrier		**BIS00RZ**	BIS M-115-03/A-SA2	**BIS003Y**	BIS M-101-01/L	**BIS003Z**	BIS M-102-01/L	**BIS0040**	BIS M-105-01/A
Data carrier to metal distance in mm		> 0		> 25	> 5	> 50	> 10	> 20	> 5
Data carrier clear zone in mm		> 50		>100	> 50	> 150	> 70	> 100	> 100
Write distance in mm		0-18		0-22	0-15	0-32	0-12	0-9	0-9
Read distance in mm		0-18		0-22	0-15	0-32	0-12	0-9	0-9
Offset in mm at distance	0 mm	±14		±15	±8	±20	±6	±7	±6
	5 mm	±14		±15	±8	±20	±6	±7	±6
	9 mm	±14		±15	±6	±20	±5	±2	±1
	12 mm	±14		±15	±4	±20	±4		
	15 mm	±14		±15	±4	±20			
	16 mm	±14		±12		±20			
	18 mm	±10		±12		±20			
	20 mm			±12		±20			
	22 mm			±4		±18			
	25 mm					±14			
	30 mm					±10			
	32 mm					±4			
	35 mm								
	40 mm								
	43 mm								

For installation see technical section.

* For use only with processor BIS M-407-039-06-S115. See page 109.
**See page 114.
***8k byte tag for use with BIS V and VM heads only.

Mounting (see technical section for details):

- flush in steel
- non-flush on steel
- non-metal

Antenna type:

- rod
- round

BIS0042	BIS M-105-02/A		BIS M-108***	**BIS0044**	BIS M-110-02/L	**BIS0045**	BIS M-111-02/L	**BIS0046**	BIS M-112-02/L	**BIS00M9**	BIS M-140-02/A-M6	**BIS00NU**	BIS M-143-02/A-M6	**BIS00NW**	BIS M-143-02/A-M8	**BIS00R4**	BIS M-144-02/A-M6	**BIS00R5**	BIS M-144-02/A-M8	**BIS00LC**	BIS M-102-03/L-H200
> 20	> 5	> 25	> 0	> 25	> 5	> 25	> 5	> 50	> 10	> 0		> 0		> 0		> 0		> 0		> 20	
> 100	> 100	> 100	> 0	>100	> 50	> 100	> 50	> 150	> 70	> 100		> 100		> 100		> 100		> 100		> 110	
0-11	0-11	0-30	0-16	0-22	0-10	0-28	0-10	0-44	0-15	0-20		0-14		0-14		0-17		0-17		0-18	
0-11	0-11	0-30	0-16	0-22	0-10	0-28	0-10	0-44	0-15	0-20		0-14		0-14		0-17		0-17		0-18	
±10	±7	±18	±10	±14	±7	±16	±7	±25	±15	±12		±9		±9		±12		±12		±15	
±8	±7	±18	±10	±14	±7	±16	±7	±25	±15	±12		±9		±9		±12		±12		±12	
±5	±3	±18	±8	±12	±2	±14	±2	±25	±12	±12		±9		±9		±12		±12		±12	
		±16	±6	±12		±14		±24	±10	±12		±6		±6		±8		±8		±10	
		±16	±6	±12		±14		±24	±8	±12						±8		±8		±7	
		±16	±4	±10		±14		±24		±7						±8		±8		±5	
		±16		±10		±14		±24		±7										±5	
		±16		±10		±14		±24		±7											
		±14		±6		±12		±22													
		±14				±12		±22													
								±22													
								±16													
								±16													
								±16													
								±10													

BIS M-300

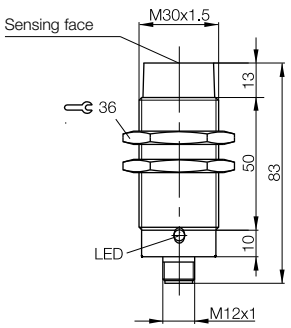

BIS VM-300

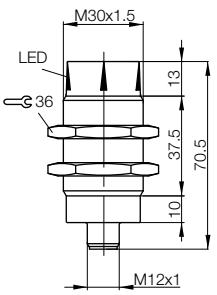

Range of Applications
Selection Criteria
Data carriers

Barrel
Read/write heads
Read/write heads with integrated processor
Block
Read/write heads
Read/write heads with integrated processor
Remote
Read/write heads
Read/write heads with integrated processor

Long range
Read/write heads
Read/write heads with integrated processor
Controller
Antenna

Processors
Gateways
Handheld
Accessories

For longer ranges
Integrated version of read/write head with processor in large form factor. For direct connection to the controller

Dimensions			
Housing material			
Serial	RS232	**Ordering code**	
		Part number	
IO-Link	10 byte	**Ordering code**	
		Part number	
	32 byte*	**Ordering code**	
		Part number	
Mounting			
Supply voltage			
Current			
Operating temperature			
Storage temperature			
Protection per IEC 60529			
Connection type			
Accessories included			
Connection cable			

Installation note for data carriers

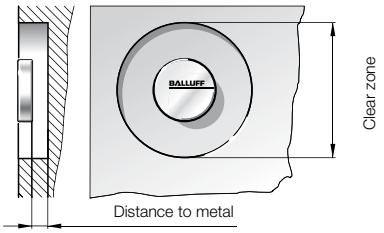

Appropriate data carrier		
Data carrier to metal distance in mm		
Data carrier clear zone in mm		
Write distance in mm		
Read distance in mm		
Offset in mm at distance	0 mm	
	5 mm	
	9 mm	
	12 mm	
	15 mm	
	16 mm	
	18 mm	
	20 mm	
	22 mm	
	25 mm	
	30 mm	
	32 mm	
	35 mm	

For installation see technical section.

*8k byte tag for use with 32 byte IO-Link head only.

Mounting (see technical section for details):

- flush in steel
- non-flush in steel
- non-metal

Antenna type:

- rod
- round

M30×1,5	**M30×1,5**
Nickel plated brass	Nickel plated brass
BIS00EJ	
BIS M-400-007-001-00-S115	
	BIS00LH
	BIS M-400-045-001-07-S4
	BIS0108
	BIS M-400-072-001-07-S4
24 V DC +10 %/–20 % including ripple	24 V DC +10 %/–20 % including ripple
≤ 50 mA no-load	≤ 150 mA
0...+70 °C	0...+70 °C
–20...+85 °C	–20...+85 °C
IP 67	IP 67
1 connector, round 8-pin serial / round 4-pin IO-Link	Round 4-pin IO-Link
Configuration software	Configuration software
See Connectivity section for cable options	See Connectivity section for cable options
Data carriers common for both heads	

BIS003Y	BIS M-101-01/L	**BIS003Z**	BIS M-102-01/L	**BIS0040**	BIS M-105-01/A	**BIS0042**	BIS M-105-02/A		BIS M-108*	**BIS0044**	BIS M-110-02/L	**BIS0045**	BIS M-111-02/L	**BIS0046**	BIS M-112-02/L
> 25	> 5	> 50	> 10	> 20	> 5	> 20	> 5	> 25	> 0	> 25	> 5	> 25	> 5	> 50	> 10
> 100	> 50	> 150	> 70	> 100	> 100	> 100	> 100	> 100	> 0	> 100	> 50	> 100	> 60	> 150	> 70
0-20	0-12	0-28	0-12	0-7	0-6	0-11	0-7	0-28	0-16	0-20	0-8	0-28	0-10	0-38	0-15
0-20	0-12	0-28	0-12	0-7	0-6	0-11	0-7	0-28	0-16	0-20	0-8	0-28	0-10	0-38	0-15
±14	±6	±20	±6	±7	±6	±9	±6	±16	±10	±12	±6	±16	±7	±22	±13
±14	±6	±20	±6	±7	±6	±8	±6	±16	±10	±12	±5	±16	±7	±22	±13
±14	±4	±20	±3			±5		±14	±8	±10		±14	±2	±22	±10
±10	±2	±20	±2					±14	±6	±8		±14		±20	±8
±10		±20						±14	±6	±8		±14		±20	±6
±8		±18						±14	±4	±5		±14		±20	
±6		±16						±14		±5		±14		±20	
±5		±15						±14		±5		±14		±20	
		±15						±12				±12		±20	
		±10						±12				±12		±20	
														±16	
														±10	
														±10	

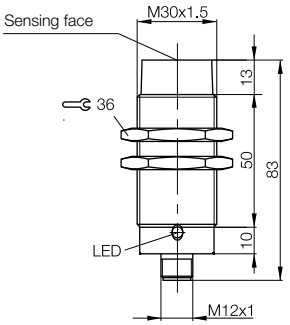

Range of Applications
Selection Criteria
Data carriers
Barrel
Read/write heads
Read/write heads with integrated processor
Block
Read/write heads
Read/write heads with integrated processor
Remote
Read/write heads
Read/write heads with integrated processor
Long range
Read/write heads
Read/write heads with integrated processor
Controller
Antenna
Processors
Gateways
Handheld
Accessories

For direct connection to the controller for tight space conditions

Dimensions			
Housing material			
Serial	RS232	**Ordering code**	
		Part number	
IO-Link	10 byte	**Ordering code**	
		Part number	
	32 byte	**Ordering code**	
		Part number	
Mounting			
Supply voltage			
Current			
Operating temperature			
Storage temperature			
Protection per IEC 60529			
Connection type			
Accessories included			
Connection cable			

Installation note for data carriers

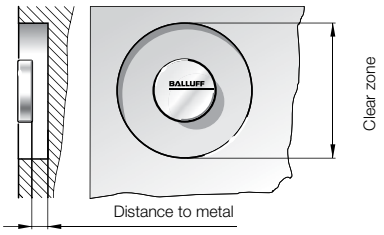

Appropriate data carrier

Data carrier to metal distance in mm	
Data carrier clear zone in mm	

Write distance in mm		
Read distance in mm		
Offset in mm at distance	0 mm	
	5 mm	
	9 mm	
	12 mm	
	15 mm	
	16 mm	
	18 mm	
	20 mm	
	22 mm	
	25 mm	

For installation see technical section.

Mounting (see technical section for details):

flush in steel

non-flush on steel

non-metal

Antenna type:

rod

round

	M30×15,5																											
	Nickel plated brass																											
	BIS00EK																											
	BIS M-400-007-002-00-S115																											

The right choice when you need a flat design with long read/write distance.

Dimensions		
Housing material		
For standard processors	**Ordering code**	
	Part number	
For BIS M-407 processors	**Ordering code**	
	Part number	
For BIS V processors	**Ordering code**	
New Generation**	Part number	
Mounting		
Operating temperature		
Storage temperature		
Protection per IEC 60529		
Connection to		
Connection cable		

Installation note for data carriers

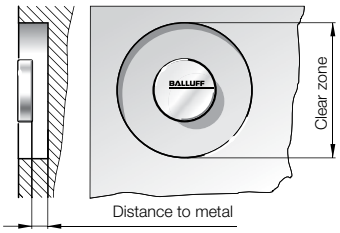

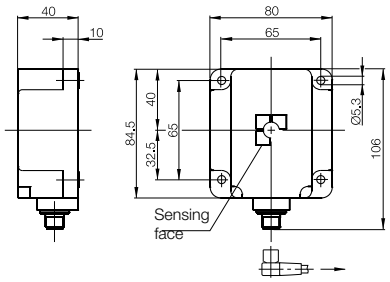

Appropriate data carrier		
Data carrier to metal distance in mm		
Data carrier clear zone in mm		
Write distance in mm		
Read distance in mm		
Offset in mm at distance	0 mm	
	5 mm	
	9 mm	
	12 mm	
	15 mm	
	16 mm	
	18 mm	
	20 mm	
	22 mm	
	25 mm	
	30 mm	
	32 mm	
	35 mm	
	40 mm	
	43 mm	
	45 mm	
	50 mm	
	52 mm	
	60 mm	
	65 mm	
	70 mm	

For installation see technical section.

* For use only with processor BIS M-407-039-06-S115. See page 109.
**See page 114.
***8k byte tag for use with BIS V and VM heads only.

Mounting (see technical section for details):

- flush in steel
- non-flush on steel
- non-metal

Antenna type:

- rod
- round

Connector orientation

	80×80×40 mm
	PBT
	BIS0055
	BIS M-301-001-S115
	BIS0056
	BIS M-301-003-S115*
	BIS00T0
	BIS VM-301-001-S4
	0...+70 °C
	–20...+85 °C
	IP 67
	Processor
	See Connectivity section for cable options

BIS00RZ	BIS M-115-03/A-SA2	**BIS00LC**	BIS M-107-03/L-H200	**BIS003Y**	BIS M-101-01/L	**BIS003Z**	BIS M-102-01/L		BIS M-108***	**BIS0044**	BIS M-110-02/L	**BIS0045**	BIS M-111-02/L	**BIS0046**	BIS M-112-02/L	**BIS0047**	BIS M-120-01/L										
> 0		> 20		> 50	> 5	> 50	> 10	> 50	> 20	> 50	> 30	> 50	> 30	> 50	> 30	> 80											
> 50		> 110		> 200	> 50	> 200	> 150	> 200	> 60	> 200	> 100	> 200	> 100	> 200	> 100	> 250											
0-30		0-28		0-34	0-15	0-45	0-35	0-45	8-22	0-32	0-20	0-45	0-30	0-70	0-45	0-50											
0-30		0-28		0-34	0-15	0-45	0-35	0-45	8-22	0-32	0-20	0-45	0-30	0-70	0-45	0-50											
±25		±20		±22	±14	±30	±18	±32	±20	±28	±20	±32	±22	±40	±25	±30											
±25		±20		±22	±14	±30	±18	±32	±20	±28	±20	±32	±22	±40	±25	±30											
±20		±20		±22	±14	±30	±18	±32	±20	±28	±18	±32	±22	±40	±25	±30											
±20		±20		±22	±10	±30	±18	±32	±18	±24	±18	±32	±22	±40	±25	±30											
±20		±20		±22	±10	±30	±18	±32	±18	±24	±15	±32	±20	±40	±25	±30											
±20		±20		±22	±8	±30	±18	±32	±18	±24	±15	±32	±20	±40	±25	±30											
±20		±17		±22	±6	±30	±18	±32	±16	±24	±12	±32	±18	±40	±25	±30											
±18		±17		±22	±4	±30	±18	±32	±16	±24	±8	±32	±16	±40	±25	±30											
±18		±10		±20		±30	±15	±25	±14	±20		±25	±14	±40	±22	±30											
±18		±5		±15		±30	±15	±25		±20		±25	±12	±40	±22	±30											
±8				±15		±30	±12	±25		±12		±25	±10	±40	±22	±28											
				±8		±30	±8	±20		±12		±20		±40	±22	±24											
				±4		±30	±4	±20				±20		±40	±20	±22											
						±24		±20				±20		±40	±20	±18											
						±20		±12				±12		±35	±15	±14											
						±16		±12				±12		±35	±12	±12											
						±4								±35		±4											
														±35													
														±30													
														±30													
														±20													

The right choice when you need a flat design with long read/write distance.

FERROIDENT/Metal Mount
Read/write head with rod type antenna.
Simply use the arrows for alignment.
For fast positioning.

Dimensions		
Housing material		
For standard processors	**Ordering code**	
	Part number	
For BIS M-407 processors	**Ordering code**	
	Part number	
For BIS V processors	**Ordering code**	
New Generation*	Part number	
Mounting		
Operating temperature		
Storage temperature		
Protection per IEC 60529		
Connection to		
Connection cable		

Installation notes for data carriers

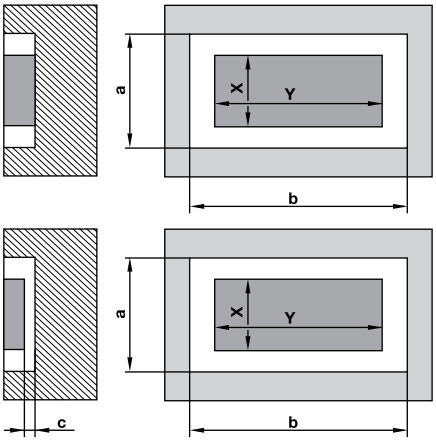

FERROIDENT/ Metal Mount

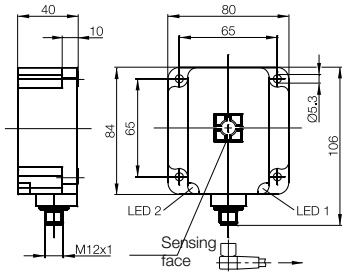

Mounting (see technical section for details):

flush in steel

non-flush on steel

non-metal

Antenna type:

rod

round

Connector orientation

Appropriate data carrier	
Data carrier clear zone in mm (a)	
Data carrier clear zone in mm (b)	
Data carrier clear zone in mm (c)	
Metallic mounting surface 40x22	
Metallic mounting surface ≥ 200x200	
Write distance in mm	
Read distance in mm	
Offset in mm at distance	
0 mm	
5 mm	
10 mm	
12 mm	
15 mm	
18 mm	
20 mm	
22 mm	
25 mm	
30 mm	
32 mm	
35 mm	
40 mm	
45 mm	
50 mm	
52 mm	
60 mm	
65 mm	
70 mm	
80 mm	
90 mm	
100 mm	

For installation see technical section.

*See page 114.
**8k byte tag for use with BIS V and VM heads only.

FERROIDENT/Metal Mount

80×84,5×40 mm																													
PBT and ASA																													
BIS005C																													
BIS M-351-001-S115																													
BIS00KU																													
BIS M-351-003-S115																													
BIS00T2																													
BIS VM-351-001-S4																													
0...+70 °C																													
–20...+85 °C																													
IP 67																													
Processor																													
See Connectivity section for cable options																													
BIS004F		BIS M-150-02/A		**BIS004H**		BIS M-151-02/A		**BIS00M2**		BIS M-152-03/A		**BIS00P3**		BIS M-153-02/A		**BIS0111**		BIS M-155-20/A**		**BIS0112**		BIS M-156-20/A**							
> 200	> 200	> 200	> 200	> 200	> 200	> 200	> 200	> 200	> 200	> 10	> 10	> 240	> 240	> 240	> 240	> 200	> 200	> 200	> 200	> 200	> 200	> 200	> 200						
> 200	> 200	> 200	> 200	> 200	> 200	> 200	> 200	> 200	> 200	> 50	> 50	> 480	> 480	> 480	> 480	> 200	> 200	> 200	> 200	> 200	> 200	> 200	> 200						
								> 50	> 50	> 2	> 2	> 50	> 50	0	0														
0-52	0-52			0-52	0-52											0-52	0-52			0-52	0-52								
		0-65	0-65			0-65	0-65											0-65	0-65			0-65	0-65						
0-52	0-52	0-65	0-65	0-52	0-52	0-65	0-65	0-30	0-30	15-30	15-30	0-100	0-100	0-90	0-90	0-52	0-52	0-65	0-65	0-52	0-52	0-65	0-65						
0-52	0-52	0-65	0-65	0-52	0-52	0-65	0-65	0-30	0-30	15-30	15-30	0-100	0-100	0-90	0-90	0-52	0-52	0-65	0-65	0-52	0-52	0-65	0-65						
X	Y	X	Y	Y	X	Y	X	X	Y	X	Y	X	Y	X	Y	X	Y	X	Y	Y	X	Y	X						
±60	±25	±65	±26	±60	±25	±65	±26	±35	±20			±100	±20	±100	±20	±60	±25	±65	±26	±60	±25	±65	±26						
±60	±25	±65	±26	±60	±25	±65	±26	±35	±20			±100	±20	±100	±20	±60	±25	±65	±26	±60	±25	±65	±26						
±60	±25	±65	±26	±60	±25	±65	±26	±35	±20			±100	±20	±100	±20	±60	±25	±65	±26	±60	±25	±65	±26						
±60	±25	±65	±25	±60	±25	±65	±25	±35	±20			±100	±20	±100	±20	±60	±25	±65	±25	±60	±25	±65	±25						
±60	±25	±65	±25	±60	±25	±65	±25	±35	±20	±35	±15	±100	±20	±100	±20	±60	±25	±65	±25	±60	±25	±65	±25						
±60	±25	±65	±25	±60	±25	±65	±25	±35	±20	±35	±15	±100	±20	±100	±20	±60	±25	±65	±25	±60	±25	±65	±25						
±60	±25	±65	±25	±60	±25	±65	±25	±35	±20	±35	±15	±100	±20	±100	±20	±60	±25	±65	±25	±60	±25	±65	±25						
±60	±25	±65	±25	±60	±25	±65	±25	±20	±20	±28	±15	±100	±20	±100	±20	±60	±25	±65	±25	±60	±25	±65	±25						
±60	±25	±65	±25	±60	±25	±65	±25	±20	±12	±28	±15	±80	±20	±80	±20	±60	±25	±65	±25	±60	±25	±65	±25						
±60	±25	±65	±25	±60	±25	±65	±25	±20	±12	±28	±15	±80	±20	±80	±20	±60	±25	±65	±25	±60	±25	±65	±25						
±50	±25	±65	±25	±50	±25	±65	±25					±80	±20	±80	±20	±50	±25	±65	±25	±50	±25	±65	±25						
±50	±25	±65	±25	±50	±25	±65	±25					±80	±20	±80	±20	±50	±25	±65	±25	±50	±25	±65	±25						
±50	±20	±50	±25	±50	±20	±50	±25					±80	±20	±80	±20	±50	±20	±50	±25	±50	±20	±50	±25						
±25	±20	±50	±25	±25	±20	±50	±25					±80	±20	±80	±20	±25	±20	±50	±25	±25	±20	±50	±25						
±25	±20	±50	±25	±25	±20	±50	±25					±80	±20	±80	±20	±25	±20	±50	±25	±25	±20	±50	±25						
±25	±8	±25	±25	±25	±8	±25	±25					±80	±20	±80	±20	±25	±8	±25	±25	±25	±8	±25	±25						
		±25	±10			±25	±10					±65	±20	±65	±20			±25	±10			±25	±10						
		±25	±10			±25	±10					±65	±20	±65	±20			±25	±10			±25	±10						
												±65	±20	±65	±20														
												±65	±20	±65	±20														
												±50	±20	±50	±20														
												±40	±20																

Range of Applications
Selection Criteria
Data carriers
Barrel
Read/write heads
Read/write heads with integrated processor
Block
Read/write heads
Read/write heads with integrated processor
Remote
Read/write heads
Read/write heads with integrated processor
Long range
Read/write heads
Read/write heads with integrated processor
Controller
Antenna
Processors
Gateways
Handheld
Accessories

Block Style Databolt™

Dimensions		
Housing material		
For standard processors	**Ordering code**	
	Part number	
For BIS M-407 processors	**Ordering code**	
	Part number	
For BIS V processors	**Ordering code**	
New Generation*	Part number	
Mounting		
Operating temperature		
Storage temperature		
Protection per IEC 60529		
Connection to		
Connection cable		

Installation note for data carriers

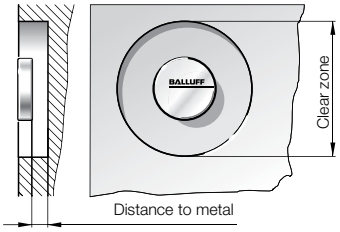

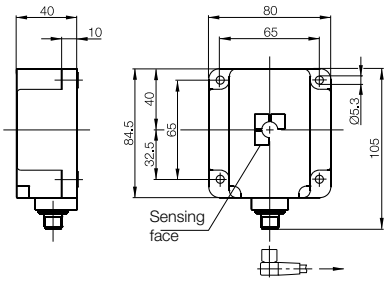

Appropriate data carrier		
Data carrier to metal distance in mm		
Data carrier clear zone in mm		
Write distance in mm		
Read distance in mm		
Offset in mm at distance	0 mm	
	5 mm	
	9 mm	
	12 mm	
	15 mm	
	16 mm	
	18 mm	
	20 mm	
	22 mm	
	25 mm	
	30 mm	
	35 mm	
	40 mm	
	45 mm	
	50 mm	
	60 mm	
	70 mm	
	80 mm	
	90 mm	

For installation see technical section.

*See page 114.
**8k byte tag for use with BIS V and VM heads only.

Mounting (see technical section for details):

- flush in steel
- non-flush on steel
- non-metal

Antenna type:

- rod
- round

84,5x80x40 mm																											
PBT																											
BIS00M6																											
BIS M-341-001-S115																											
BIS00R3																											
BIS M-341-003-S115																											
BIS00TA																											
BIS VM-341-001-S4																											
0...+70 °C																											
–20...+85 °C																											
IP 67																											
Proccessor																											
See Connectivity section for cable options																											
see data carriers	BIS M-140-02/A-M_	**BIS0046**	BIS M-112-02/L		BIS M-108**	**see data carriers**	BIS M-142**	**see data carriers**	BIS M-143-02/A-M_	**see data carriers**	BIS M-144-02/A-M_																
> 0		> 50		> 50	> 0	> 0		> 0		> 0																	
> 100		> 200		> 200	> 0	> 100		> 100		> 100																	
0-40		35-90		20-60	0-50	0-40		5-21		0-40																	
0-40		35-90		20-60	0-50	0-40		5-21		0-40																	
±25					±30	±25		±25		±25																	
±25					±30	±25		±25		±25																	
±25					±30	±25		±17		±25																	
±25					±30	±25		±17		±25																	
±25					±30	±25		±17		±25																	
±25					±30	±25		±17		±25																	
±25					±30	±25		±17		±25																	
±25				±35	±30	±25				±25																	
±25				±35	±30	±25				±25																	
±25				±35	±30	±25				±25																	
±15				±35	±30	±25				±25																	
±15		±55		±30	±20	±15				±15																	
±10		±55		±30	±20	±15				±15																	
		±55		±30	±20																						
		±55		±30	±20																						
		±55		±30																							
		±40																									
		±40																									
		±20																									

Range of Applications
Selection Criteria
Data carriers
Barrel
Read/write heads
Read/write heads with integrated processor
Block
Read/write heads
Read/write heads with integrated processor
Remote
Read/write heads
Read/write heads with integrated processor
Long range
Read/write heads
Read/write heads with integrated processor
Controller
Antenna
Processors
Gateways
Handheld
Accessories

When the available space requires a flat housing, this version is the ideal choice. For direct connection to the controller

Dimensions			
Housing material			
Serial	RS232	**Ordering code**	
		Part number	
IO-Link	10 byte	**Ordering code**	
		Part number	
	32 byte*	**Ordering code**	
		Part number	
Mounting			
Supply voltage			
Current			
Operating temperature			
Storage temperature			
Protection per IEC 60529			
Connection type			
Accessories included			
Connection cable			

Installation note for data carriers

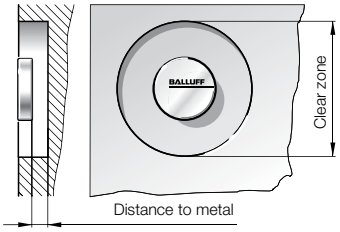

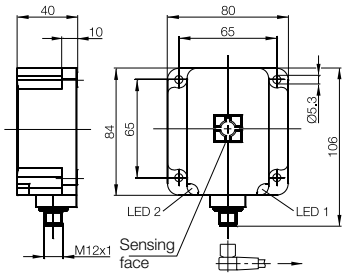

Appropriate data carrier

Data carrier to metal distance in mm		
Data carrier clear zone in mm		

Write distance in mm		
Read distance in mm		
Offset in mm at distance	0 mm	
	5 mm	
	9 mm	
	12 mm	
	15 mm	
	16 mm	
	18 mm	
	20 mm	
	22 mm	
	25 mm	
	30 mm	
	32 mm	
	35 mm	
	40 mm	
	43 mm	
	45 mm	
	50 mm	
	52 mm	
	60 mm	

For installation see technical section.

*8k byte tag for use with 32 byte IO-Link head only.

Mounting (see technical section for details):

- flush in steel
- non-flush on steel
- non-metal

Antenna type:

- rod
- round

Connector orientation

	80×80×40 mm
	PBT
	BIS00EM
	BIS M-401-007-001-00-S115
	BIS00LK
	BIS M-401-045-001-07-S4
	BIS0102
	BIS M-401-072-001-07-S4
	⎓
	24 V DC +10 %/–20 % including ripple
	≤ 50 mA no-load
	0...+70 °C
	–20...+85 °C
	IP 67
	1 connector, round 8-pin serial / round 4-pin IO-Link
	Serial includes configuration software
	See Connectivity section for cable options

BIS003Y	BIS M-101-01/L	**BIS003Z**	BIS M-102-01/L	**BIS0047**	BIS M-120-01/L	**BIS0043**	BIS M-108-02/L	**BIS0044**	BIS M-110-02/L	**BIS0045**	BIS M-111-02/L	**BIS0046**	BIS M-112-02/L	**BIS00M9**	BIS M-140-02/A-M6*	**BIS00M8**	BIS M-140-02/A-M8*										
> 50	> 10	> 50	> 10	> 80		> 50	> 20	> 50	> 30	> 50	> 30	> 50	> 30	> 0		> 0											
> 200	> 150	> 200	> 150	>250		> 200	> 60	> 200	> 100	> 200	> 100	> 200	> 100	> 100		> 100											
0-28	0-20	0-45	0-34	0-50		0-40	0-18	0-30	0-18	0-40	0-25	0-60	0-25	0-32	0-32	0-32	0-32										
0-28	0-20	0-45	0-34	0-50		0-40	0-18	0-30	0-18	0-40	0-25	0-60	0-25	0-32	0-32	0-32	0-32										
±22	±12	±30	±16	±30		±30	±16	±25	±18	±30	±20	±35	±25	±25		±25											
±22	±12	±30	±16	±30		±30	±16	±25	±18	±30	±20	±35	±25	±25		±25											
±22	±10	±30	±16	±30		±30	±16	±25	±15	±30	±20	±35	±25	±25		±25											
±22	±8	±30	±14	±30		±25	±16	±20	±15	±25	±20	±35	±25	±25		±25											
±22	±8	±30	±14	±30		±25	±16	±20	±12	±25	±18	±35	±25	±25		±25											
±20	±6	±30	±12	±30		±25	±16	±20	±12	±25	±18	±35	±25	±25		±25											
±20	±4	±30	±10	±30		±25	±14	±20	±8	±25	±16	±35	±25	±25		±25											
±20	±2	±30	±10	±30		±25		±20		±25	±14	±35	±25	±25		±25											
±16		±24	±8	±30		±20		±15		±20	±12	±35	±22	±20		±20											
±12		±24	±8	±30		±20		±15		±20	±10	±35	±22	±20		±20											
		±24	±6	±28		±20		±10		±20		±35	±22	±20		±20											
		±20	±4	±24		±15		±10		±15		±35	±22	±15		±15											
		±20		±22		±15				±15		±35	±20	±15		±15											
		±15		±18		±15				±15		±35															
		±8		±14								±25															
		±5		±12								±25															
				±4								±25															
												±25															
												±25															

Range of Applications
Selection Criteria
Data carriers
Barrel
Read/write heads
Read/write heads with integrated processor
Block
Read/write heads
Read/write heads with integrated processor
Remote
Read/write heads
Read/write heads with integrated processor
Long range
Read/write heads
Read/write heads with integrated processor
Controller
Antenna
Processors
Gateways
Handheld
Accessories

When the available space requires a flat housing, this version is the ideal choice. For direct connection to the controller

FERROIDENT/Metal Mount
Read/write head with rod type antenna. Simply use the arrows for alignment. For fast positioning.

Dimensions			
Housing material			
Serial	RS232	**Ordering code**	
		Part number	
IO-Link	10 byte	**Ordering code**	
		Part number	
	32 byte*	**Ordering code**	
		Part number	
Mounting			
Supply voltage			
Current			
Operating temperature			
Storage temperature			
Protection per IEC 60529			
Connection type			
Accessories included			
Connection cable			

Installation notes for data carriers

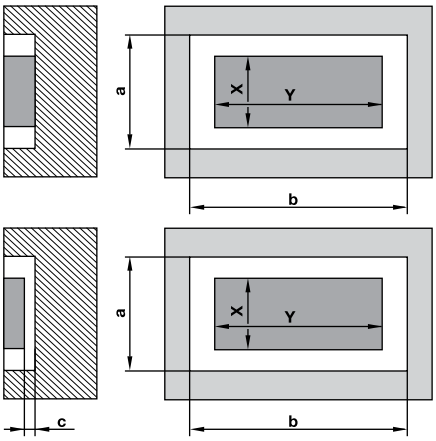

Appropriate data carrier	
Data carrier clear zone in mm (a)	
Data carrier clear zone in mm (b)	
Data carrier clear zone in mm (c)	

Metallic mounting surface 40x22	
Metallic mounting surface ≥ 200x200	
Write distance in mm	
Read distance in mm	
Offset in mm at distance	
0 mm	
5 mm	
10 mm	
12 mm	
15 mm	
18 mm	
20 mm	
22 mm	
25 mm	
30 mm	
32 mm	
35 mm	
40 mm	
45 mm	
50 mm	
52 mm	
60 mm	
65 mm	
70 mm	
80 mm	
90 mm	
100 mm	

FERROIDENT/ Metal Mount

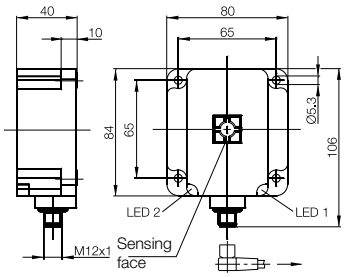

Mounting (see technical section for details):

flush in steel

non-flush on steel

non-metal

Antenna type:

rod

round

Connector orientation

For installation see technical section.

*8k byte tag for use with 32 byte IO-Link head only.

FERROIDENT/Metal Mount

	80×84,5×40 mm
	PBT and ASA
	BIS00ER
	BIS M-451-007-001-00-S115
	BIS00LM
	BIS M-451-045-001-07-S4
	BIS0103
	BIS M-451-072-001-07-S4
	24 V DC +10 %/–20 % including ripple
	≤ 50 mA no-load
	0...+70 °C
	–20...+85 °C
	IP 67
	1 connector, round 8-pin serial / round 4-pin IO-Link
	Serial includes configuration software
	See Connectivity section for cable options

BIS004F		BIS M-150-02/A		**BIS004H**		BIS M-151-02/A		**BIS00M2**		BIS M-152-03/A		**BIS00P3**		BIS M-153-02/A		**BIS00P1**		BIS M-154-03/A		**BIS0111**		BIS M-155-20/A*		**BIS0112**		BIS M-156-20/A*	
> 200	> 200	> 200	> 200	> 200	> 200	> 200	> 200	> 200	> 200	> 10	> 10	> 240		> 240						> 200	> 200	> 200	> 200	> 200	> 200	> 200	> 200
> 200	> 200	> 200	> 200	> 200	> 200	> 200	> 200	> 200	> 200	> 50	> 50	> 480		> 480						> 200	> 200	> 200	> 200	> 200	> 200	> 200	> 200
								> 50	> 50	> 2	> 2	> 50		> 50													
0-52	0-52			0-52	0-52															0-52	0-52			0-52	0-52		
		0-65	0-65			0-65	0-65															0-65	0-65			0-65	0-65
0-52	0-52	0-65	0-65	0-52	0-52	0-65	0-65	0-30	0-30	15-30	15-30	0-100		0-100		0-30	0-30	15-30	15-30	0-52	0-52	0-65	0-65	0-52	0-52	0-65	0-65
0-52	0-52	0-65	0-65	0-52	0-52	0-65	0-65	0-30	0-30	15-30	15-30	0-100		0-100		0-30	0-30	15-30	15-30	0-52	0-52	0-65	0-65	0-52	0-52	0-65	0-65
X	Y	X	Y	Y	X	Y	X	X	Y	X	Y	X		Y		X	Y	X	Y	X	Y	X	Y	Y	X	Y	X
±60	±25	±65	±26	±60	±25	±65	±26	±35	±20			±60		±20		±35	±20			±60	±25	±65	±26	±60	±25	±65	±26
±60	±25	±65	±26	±60	±25	±65	±25	±35	±20			±60		±20		±35	±20			±60	±25	±65	±26	±60	±25	±65	±25
±60	±25	±65	±26	±60	±25	±65	±25	±35	±20			±60		±20		±35	±20			±60	±25	±65	±26	±60	±25	±65	±25
±60	±25	±65	±25	±60	±25	±65	±25	±35	±20			±60		±20		±35	±20			±60	±25	±65	±25	±60	±25	±65	±25
±60	±25	±65	±25	±60	±25	±65	±25	±35	±20	±35	±15	±60		±20		±35	±20	±35	±15	±60	±25	±65	±25	±60	±25	±65	±25
±60	±25	±65	±25	±60	±25	±65	±25	±35	±20	±35	±15	±60		±20		±35	±20	±35	±15	±60	±25	±65	±25	±60	±25	±65	±25
±60	±25	±65	±25	±60	±25	±65	±25	±35	±20	±35	±15	±60		±20		±35	±20	±35	±15	±60	±25	±65	±25	±60	±25	±65	±25
±60	±25	±65	±25	±60	±25	±65	±25	±35	±20	±35	±15	±60		±20		±35	±20	±35	±15	±60	±25	±65	±25	±60	±25	±65	±25
±60	±25	±65	±25	±60	±25	±65	±25	±20	±12	±28	±15	±60		±20		±20	±12	±28	±15	±60	±25	±65	±25	±60	±25	±65	±25
±60	±25	±65	±25	±60	±25	±65	±25	±20	±12	±28	±15	±60		±20		±20	±12	±28	±15	±60	±25	±65	±25	±60	±25	±65	±25
±50	±25	±65	±25	±50	±25	±65	±25					±60		±20						±50	±25	±65	±25	±50	±25	±65	±25
±50	±25	±65	±25	±50	±25	±65	±25					±60		±20						±50	±25	±65	±25	±50	±25	±65	±25
±50	±20	±50	±25	±50	±20	±50	±25					±60		±20						±50	±20	±50	±25	±50	±20	±50	±25
±25	±20	±50	±25	±25	±20	±50	±25					±60		±20						±25	±20	±50	±25	±25	±20	±50	±25
±25	±20	±50	±25	±25	±20	±50	±25					±60		±20						±25	±20	±50	±25	±25	±20	±50	±25
±25	±8	±25	±25	±25	±8	±25	±25					±60		±20						±25	±8	±25	±25	±25	±8	±25	±25
		±25	±10			±25	±10					±60		±20								±25	±10			±25	±10
		±25	±10			±25	±10					±60		±20								±25	±10			±25	±10
												±60		±20													
												±60		±20													
												±40		±20													
												±40		±20													

Range of Applications
Selection Criteria
Data carriers
Barrel
Read/write heads
Read/write heads with integrated processor
Block
Read/write heads
Read/write heads with integrated processor
Remote
Read/write heads
Read/write heads with integrated processor
Long range
Read/write heads
Read/write heads with integrated processor
Controller
Antenna
Processors
Gateways
Handheld
Accessories

Dimensions			
Housing material			
Subnet16*	RS485	**Ordering code**	
		Part number	
Serial	RS232	**Ordering code**	
		Part number	
Serial	RS422	**Ordering code**	
		Part number	
Serial	USB	**Ordering code**	
		Part number	
Mounting			
Supply voltage			
Current			
Operating temperature			
Storage temperature			
Protection per IEC 60529			
Connection type			

Installation notes for data carriers

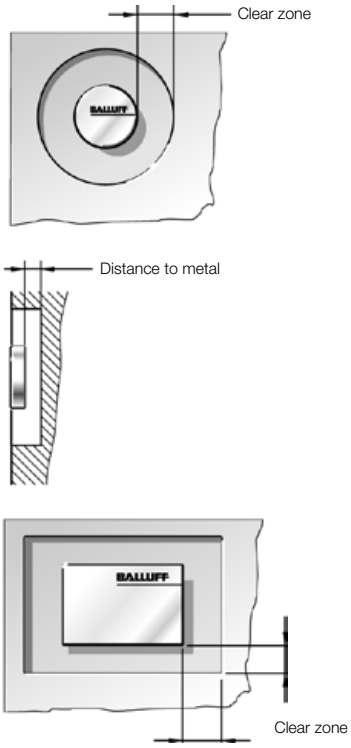

Appropriate data carrier		
Data carrier to metal distance in mm		
Data carrier clear zone in mm		
Write distance in mm		
Read distance in mm		
Offset in mm at distance	0 mm	
	5 mm	
	10 mm	
	15 mm	
	23 mm	
	32 mm	
	46 mm	
	60 mm	
	70 mm	
	85 mm	

For installation see technical section.

* See Gateways on page 118 for multiprocessor configuration.

Mounting (see technical section for details):

- flush in steel
- non-flush on steel
- non-metal

Antenna type:

- rod
- round

Read/write head with integrated processor

56x40x24 mm	**56x40x24 mm**	**56x40x24 mm**	**56x40x24 mm**
PC	PC	PC	PC
BIS00W1			
BIS M-410-067-001-04-S92			
	BIS00W2		
	BIS M-410-068-001-00-S115		
		BIS00W3	
		BIS M-410-068-001-02-S115	
			BIS00W4
			BIS M-410-068-001-09-S72
—	—	—	—
10...30 V DC over BUS	10...30 V DC over BUS	10...30 V DC over BUS	5 V DC
87 mA @ 24 V DC	87 mA @ 24 V DC	87 mA @ 24 V DC	
-20...+50 °C	-20...+50 °C	-20...+50 °C	-20...+50 °C
-40...+85 °C	-40...+85 °C	-40...+85 °C	-40...+85 °C
IP 67	IP 67	IP 67	IP 67
M12 5-pin	M12 8-pin	M12 8-pin	M12 5-pin (B-Coded)

Data carriers common for all heads

BIS00YF	BIS M-132-03/L	**BIS00YE**	BIS M-132-03/L-HT	**BIS00YC**	BIS M-132-10/L	**BIS00YA**	BIS M-132-10/L-HT	**BIS00Y9**	BIS M-133-02/A	**BIS00Y7**	BIS M-134-10/L-HT	**BIS00Y6**	BIS M-135-02/L	**BIS00Y5**	BIS M-135-03/L	**BIS00Y4**	BIS M-135-03/L-HT	**BIS00Y3**	BIS M-135-07/L	**BIS00Y2**	BIS M-135-07/L-HT	**BIS00W9**	BIS M-136-03/L	**BIS00YL**	BIS M-130-03/L	**BIS00YK**	BIS M-130-07/L
> 50		> 50		> 50		> 50		> 50		> 50		> 50		> 50		> 50		> 50		> 50		> 50		> 50		> 50	
> 50		> 50		> 50		> 50		> 50		> 50		> 50		> 50		> 50		> 50		> 50		> 50		> 50		> 50	
0-48		0-40		0-15		0-15		0-32		0-36		0-60		0-68		0-20		23-46		23-46		0-85		0-7		0-10	
0-48		0-40		0-15		0-15		0-32		0-36		0-60		0-68		0-20		23-46		23-46		0-85		0-7		0-10	
±30		±25		±15		±15		±20		±25		±35		±40		±44						±40		±11		±12	
±30		±25		±15		±15		±20		±25		±35		±40		±44						±40		±8		±10	
±30		±25		±12		±12		±20		±25		±35		±40		±44						±40				±5	
±25		±20		±8		±8		±16		±25		±35		±40		±44						±40					
±25		±20						±10		±20		±35		±40		±32		±25		±24		±35					
±20		±12						±8		±12		±30		±32		±32		±20		±18		±35					
±12												±24		±32		±32		±10		±10		±35					
												±16		±24		±25						±25					
																±15						±25					
																						±20					

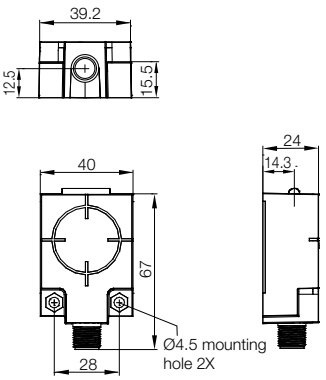

Range of Applications
Selection Criteria
Data carriers
Barrel
Read/write heads
Read/write heads with integrated processor
Block
Read/write heads
Read/write heads with integrated processor
Remote
Read/write heads
Read/write heads with integrated processor
Long range
Read/write heads
Read/write heads with integrated processor
Controller
Antenna
Processors
Gateways
Handheld
Accessories

Dimensions			
Housing material			
Subnet16*	RS485	**Ordering code**	
		Part number	
Serial	RS232	**Ordering code**	
		Part number	
Serial	RS422	**Ordering code**	
		Part number	
Serial	USB	**Ordering code**	
		Part number	
Mounting			
Supply voltage			
Current			
Operating temperature			
Storage temperature			
Protection per IEC 60529			
Connection type			

The Unit may be mounted to wood, plastic fixtures and metal plate surfaces. However, do not recess the controller in metal. For optimal performance, allow 60 mm (2.5 inches) clearance from metallic objects around the sides of the controller.

Installation notes for data carriers

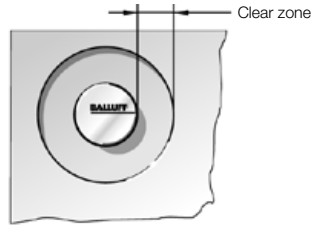

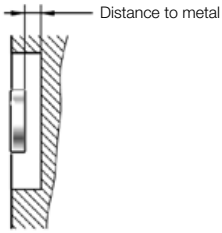

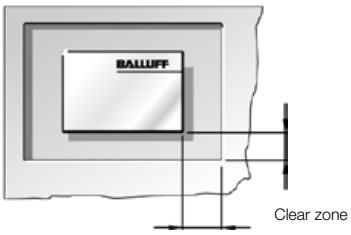

Appropriate data carrier		
Data carrier to metal distance in mm		
Data carrier clear zone in mm		
Write distance in mm		
Read distance in mm		
Offset in mm at distance	0 mm	
	11 mm	
	22 mm	
	26 mm	
	38 mm	
	52 mm	
	60 mm	
	75 mm	
	95 mm	
	100 mm	
	110 mm	
	125 mm	
	150 mm	
	155 mm	

For installation see technical section.

* See Gateways on page 118 for multiprocessor configuration.

Mounting (see technical section for details):

- flush in steel
- non-flush on steel
- non-metal

Antenna type:

- rod
- round

Read/write head with integrated processor

105x73x24 mm	**105x73x24 mm**	**105x73x24 mm**	**105x73x24 mm**
PC	PC	PC	PC
BIS00W5			
BIS M-411-067-001-04-S92			
	BIS00W6		
	BIS M-411-068-001-00-S115		
		BIS00W7	
		BIS M-411-068-001-02-S115	
			BIS00W8
			BIS M-411-068-001-09-S72
⎓	⎓	⎓	⎓
10...30 V DC	10...30 V DC	10...30 V DC	5 V DC
87 mA @ 24 V DC	87 mA @ 24 V DC	87 mA @ 24 V DC	
-20...+50 °C	-20...+50 °C	-20...+50 °C	-20...+50 °C
-20...+70 °C	-20...+70 °C	-20...+70 °C	-20...+70 °C
IP 67	IP 67	IP 67	IP 67
M12 5-pin	M12 8-pin	M12 8-pin	M12 5-pin (B-Coded)

Data carriers common for all heads

BIS00YF	BIS M-132-03/L	**BIS00YE**	BIS M-132-03/L-HT	**BIS00YC**	BIS M-132-10/L	**BIS00YA**	BIS M-132-10/L-HT	**BIS00Y9**	BIS M-133-02/A	**BIS00Y7**	BIS M-134-10/L-HT	**BIS00Y6**	BIS M-135-02/L	**BIS00Y5**	BIS M-135-03/L	**BIS00Y4**	BIS M-135-03/L-HT	**BIS00Y3**	BIS M-135-07/L	**BIS00Y2**	BIS M-135-07/L-HT	**BIS00W9**	BIS M-136-03/L	**BIS00YK**	BIS M-130-07/L		
> 10		> 10		> 10		> 10		> 10		> 10		> 10		> 10		> 10		> 10		> 10		> 10		> 10			
> 100		> 100		> 100		> 100		> 100		> 100		> 100		> 100		> 100		> 100		> 100		> 100		> 100			
0-80		0-70		0-26		0-22		38-52		0-60		0-100		0-110		0-125		11-95		11-75		0-155		0-13			
0-80		0-70		0-26		0-22		38-52		0-60		0-100		0-110		0-125		11-95		11-75		0-155		0-13			
±50		±42		±20		±20				±32		±50		±62		±65						±90		±4			
±50		±42		±20		±20				±32		±50		±62		±65		±52		±50		±90		±4			
±40		±39		±15		±10				±32		±50		±62		±65		±52		±50		±90					
±40		±39		±15						±30		±50		±62		±65		±52		±50		±90					
±40		±39						±25		±30		±50		±58		±65		±48		±42		±80					
±35		±36						±25		±25		±50		±58		±62		±48		±42		±80					
±35		±36								±20		±50		±58		±62		±48		±35		±80					
±30												±45		±52		±62		±44		±35		±80					
												±45		±52		±58		±40				±75					
												±45		±52		±58						±75					
														±50		±58						±75					
																±50						±60					
																						±60					
																						±50					

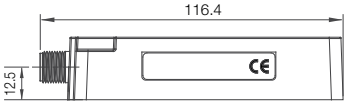

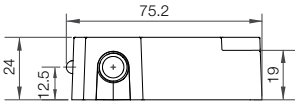

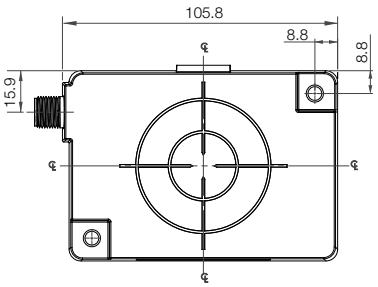

Range of Applications
Selection Criteria
Data carriers
Barrel
Read/write heads
Read/write heads with integrated processor
Block
Read/write heads
Read/write heads with integrated processor
Remote
Read/write heads
Read/write heads with integrated processor
Long range
Read/write heads
Read/write heads with integrated processor
Controller
Antenna
Processors
Gateways
Handheld
Accessories

Compact Antenna Style

FERROIDENT/ Metal Mount

The Balluff BIS-M System combines advantages such as the fully flush installation of data carriers in steel and absolute data reliability with important properties such as:

- Large reading/writing distances of up to 130 mm
- Fast data communication from data carrier via processor to controller
- Seamless integration in intralogistics applications through global standard ISO 15693/14443
- Smallest possible antenna design sizes

The components are specially designed and manufactured for use with transfer systems from Bosch-Rexroth (TS1 and TS2). The design not only takes RFID communication into consideration but also simple assembly.

Can be installed from the kit, depending on the application. Thanks to the robust systems and 20 years of experience with RFID, the described solution is a must for every automation task.

Installation note for data carriers

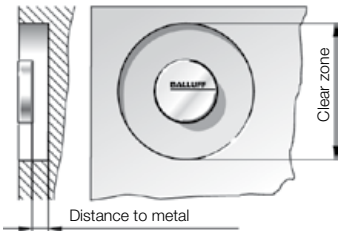

Dimensions		**25×50×10 mm**
Housing material		ABS-GF16
Standard	**Ordering code**	**BIS00NY**
	Part number	BIS M-352-001-S115
Mounting		
Operating temperature		0...+70 °C
Storage temperature		–20...+85 °C
Protection per IEC 60529		IP 67
Cable type		0.5 m PUR
Connection to		Processor
Connection cable		See Connectivity section for cable options

Appropriate data carrier	**BIS00NZ**	BIS M-191-02/A	**BIS00M2**	BIS M-152-03/A
Data carrier to metal distance in mm	> 27	> 27	> 0	> 0
Data carrier clear zone in mm	> 27	> 27	> 0	> 0
Write distance in mm	0-22	0-22	0-17	0-17
Read distance in mm	0-22	0-22	0-17	0-17
Offset in mm at distance	X	Y	X	Y
0 mm	±25	±5	±22	±8
5 mm	±25	±5	±22	±8
9 mm	±25	±5	±22	±8
10 mm	±25	±5	±22	±8
11 mm	±25	±5	±22	±8
12 mm	±25	±5	±22	±8
15 mm	±25	±5	±15	±8
17 mm	±25	±5	±15	±8
20 mm	±15	±5		
22 mm	±15	±5		

For installation see technical section.

Mounting (see technical section for details):

- flush in steel
- non-flush on steel
- non-metal

Antenna type:

- rod
- round

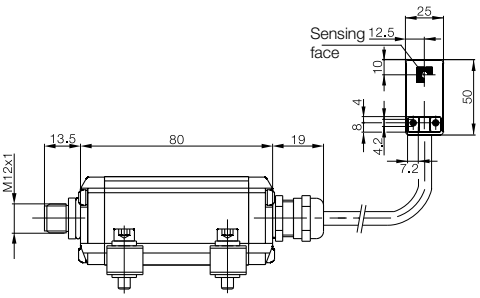

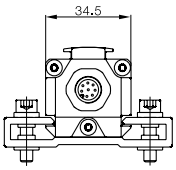

25×50×10 mm	**M18×1**
ABS-GF16	Nickel plated brass
BIS00NK	**BIS00P2**
BIS M-305-001-S115	BIS M-307-001-S115
0...+70 °C	0...+70 °C
–20...+85 °C	–20...+85 °C
IP 67	IP 67
0.5 m PUR	0.5 m PUR
Processor	Processor
See Connectivity section for cable options	See Connectivity section for cable options

BIS0040	BIS M-105-01/A	**BIS0042**	BIS M-105-02/A	**BIS0044**	BIS M-110-02/L	**BIS0048**	BIS M-122-01/A	**BIS004A**	BIS M-122-02/A	**BIS0043**	BIS M-108-02/L	**BIS00M9**	BIS M-140-02/A-M6	**BIS00R4**	BIS M-144-02/A-M6-GY	**BIS0040**	BIS M-105-01/A	**BIS0042**	BIS M-105-02/A	**BIS0044**	BIS M-110-02/L	**BIS0048**	BIS M-122-01/A	**BIS004A**	BIS M-122-02/A		
> 10	> 0	> 10	> 0	> 25	> 0	> 10	> 0	> 10	> 0	> 25	> 0	> 0		> 0		> 10	> 0	> 10	> 0	> 25	> 0	> 10	> 0	> 10	> 0		
> 60	> 0	> 60	> 0	> 80	> 0	> 60	> 0	> 60	> 0	> 100	> 0	> 100		> 100		> 60	> 0	> 60	> 0	> 80	> 0	> 60	> 0	> 60	> 0		
0-6	0-4	0-8	0-6	0-13		0-5	0-4	0-7	0-5	0-17	0-11	0-15		0-13		0-6	0-4	0-8	0-6	0-13		0-5	0-4	0-7	0-5		
0-6	0-4	0-8	0-6	0-13		0-5	0-4	0-7	0-5	0-17	0-11	0-15		0-13		0-6	0-4	0-8	0-6	0-13		0-5	0-4	0-7	0-5		
±3	±3	±4	±4	±6		±3	±3	±4	±3	±12	±8	±8		±8		±3	±3	±4	±4	±6		±3	±3	±4	±3		
±2		±4	±2	±6		±2		±3	±2	±12	±8	±8		±8		±2		±4	±2	±6		±2		±3	±2		
				±4						±12	±6	±8		±8						±4							
										±10	±4	±6		±6													
				±2																±2							
										±8		±6															
										±4																	

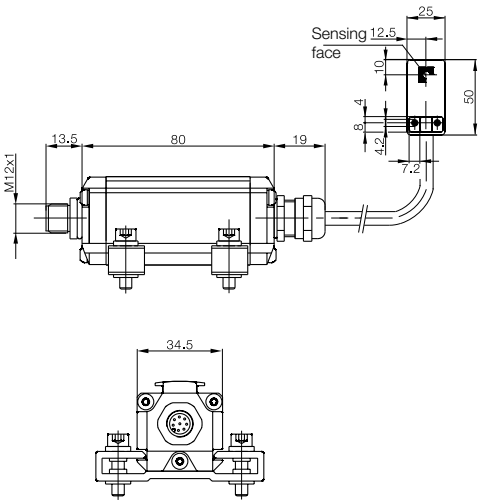

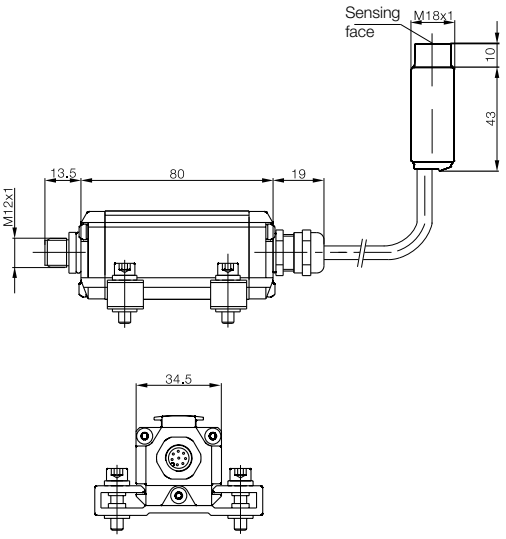

Range of Applications
Selection Criteria
Data carriers
Barrel
Read/write heads
Read/write heads with integrated processor
Block
Read/write heads
Read/write heads with integrated processor
Remote
Read/write heads
Read/write heads with integrated processor
Long range
Read/write heads
Read/write heads with integrated processor
Controller
Antenna
Processors
Gateways
Handheld
Accessories

Compact Antenna Style BIS V New Generation

Dimensions		
Housing material		
For BIS V processor	**Ordering code**	
New Generation*	Part number	
Mounting		
Operating temperature		
Storage temperature		
Protection per IEC 60529		
Cable type		
Connection to		
Connection cable		

Installation note for data carriers

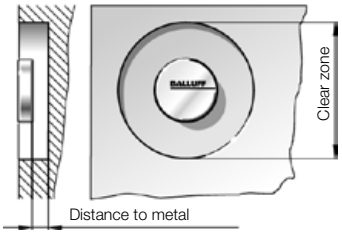

Appropriate data carrier		
Data carrier to metal distance in mm		
Data carrier clear zone in mm		
Write distance in mm		
Read distance in mm		
Offset in mm at distance		
	0 mm	
	5 mm	
	9 mm	
	10 mm	
	11 mm	
	12 mm	
	15 mm	

For installation see technical section.

*See page 114.

Mounting (see technical section for details):

flush in steel

non-flush on steel

non-metal

Antenna type:

rod

round

	M12x1																								
	AlMg Si 0.5/nickel plated CuZu																								
	BIS00T7																								
	BIS VM-306-001-S4																								
	0...+70 °C																								
	-20...+85 °C																								
	IP 67																								
	0.5 m PUR																								
	Processor																								
	See Connectivity section for cable options																								

	M18x1																								
	AlMg Si 0.5/nickel plated CuZu																								
	BIS00T8																								
	BIS VM-307-001-S4																								
	0...+70 °C																								
	-20...+85 °C																								
	IP 67																								
	0.5 m PUR																								
	Processor																								
	See Connectivity section for cable options																								

BIS0040	BIS M-105-01/A	**BIS0042**	BIS M-105-02/A	**BIS00UC**	BIS M-116-03/A	**BIS004A**	BIS M-122-02/A	**BIS0040**	BIS M-105-01/A	**BIS0042**	BIS M-105-02/A	**BIS0044**	BIS M-110-02/L	**BIS0048**	BIS M-122-01/A	**BIS004A**	BIS M-122-02/A	**see data carriers**	BIS M-140-02/A-M_	**see data carriers**	BIS M-142-02/A-M_	**see data carriers**	BIS M-143-02/A-M_	**see data carriers**	BIS M-144-02/A-M_
> 5		> 5		> 0	> 5	> 5		> 10	> 0	> 10	> 0	> 25	> 0	> 10	> 0	> 10	> 0	> 0		> 0		> 0		> 0	
> 10		> 10		> 10	> 10	> 10		> 60	> 0	> 60	> 0	> 80	> 0	> 60	> 0	> 60	> 0	> 100		> 100		> 100		> 100	
0-5		0-6		0-1	0-3	0-5		0-6	0-4	0-8	0-6	0-13		0-5	0-4	0-7	0-5	0-15		0-13		0-10		0-13	
0-5		0-6		0-1	0-3	0-5		0-6	0-4	0-8	0-6	0-13		0-5	0-4	0-7	0-5	0-15		0-13		0-10		0-13	
±2		±2		±1	±2	±2		±3	±3	±4	±4	±6		±3	±3	±4	±3	±10		±8		±5		±8	
±1		±2				±1		±2		±4	±2	±6		±2		±3	±2	±10		±8		±5		±8	
												±4						±10		±8		±5		±8	
												±4						±10		±8		±5		±8	
												±2						±8		±8				±6	
												±2						±8		±6					
																		±8							

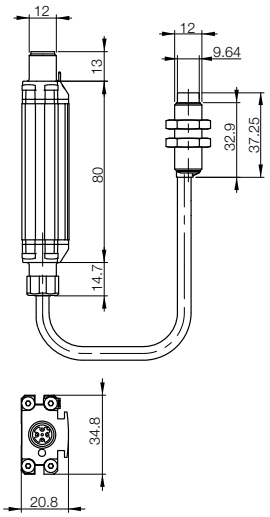

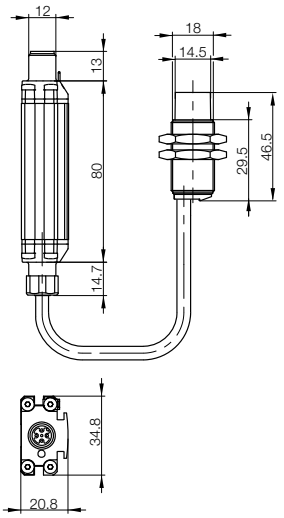

Range of Applications
Selection Criteria
Data carriers
Barrel
Read/write heads
Read/write heads with integrated processor
Block
Read/write heads
Read/write heads with integrated processor
Remote
Read/write heads
Read/write heads with integrated processor
Long range
Read/write heads
Read/write heads with integrated processor
Controller
Antenna
Processors
Gateways
Handheld
Accessories

Compact Antenna Style BIS V New Generation

Dimensions		
Housing material		
For BIS V processor	**Ordering code**	
New Generation*	Part number	
Mounting		
Operating temperature		
Storage temperature		
Protection per IEC 60529		
Cable type		
Connection to		
Connection cable		

Installation note for data carriers

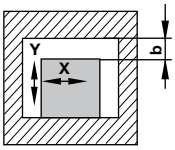

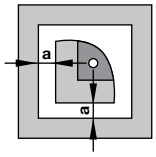

Appropriate data carrier		
Data carrier to metal distance in mm		
Data carrier clear zone in mm		
Write distance in mm		
Read distance in mm		
Offset in mm at distance		
	0 mm	
	5 mm	
	9 mm	
	10 mm	
	11 mm	
	12 mm	
	15 mm	
	17 mm	

For installation see technical section.

*See page 114.
**8k byte tag for use with BIS V and VM heads only.

Mounting bracket for BIS VM-352
Ordering code: BAM01MY
Part number: BAM MB-XA-010-B07-4
See accessories section.
For BIS VM or M-352 heads only.

Mounting (see technical section for details):

flush in steel

non-flush on steel

non-metal

Antenna type:

rod

round

FERROIDENT/ Metal Mount

25x50x10 mm	**25x50x10 mm**
AlMg Si 0.5/ABS-GF16	AlMg Si 0.5/ABS-GF16
BIS0076	**BIS00T9**
BIS VM-352-001-S4	BIS VM-305-001-S4
0...+70 °C	0...+70 °C
-20...+85 °C	-20...+85 °C
IP 67	IP 67
0.5 m PUR	0.5 m PUR
Processor	Processor
See Connectivity section for cable options	See Connectivity section for cable options

BIS00NZ	BIS M-191-02/A									**BIS0040**	BIS M-105-01/A	**BIS0042**	BIS M-105-02/A	**BIS0044**	BIS M-110-02/L	**BIS0048**	BIS M-122-01/A	**BIS004A**	BIS M-122-02/A		BIS M-108**	**BIS00M9**	BIS M-140-02/A-M6	**BIS00R4**	BIS M-144-02/A-M6-GY
> 27	> 27									> 10	> 0	> 10	> 0	> 25	> 0	> 10	> 0	> 10	> 0	> 25	> 0	> 0		> 0	
> 27	> 27									> 60	> 0	> 60	> 0	> 80	> 0	> 60	> 0	> 60	> 0	> 100	> 0	> 100		> 100	
0-22	0-22									0-6	0-4	0-8	0-6	0-13		0-5	0-4	0-7	0-5	0-17	0-11	0-15		0-13	
0-22	0-22									0-6	0-4	0-8	0-6	0-13		0-5	0-4	0-7	0-5	0-17	0-11	0-15		0-13	
X	Y																								
±25	±5									±3	±3	±4	±4	±6		±3	±3	±4	±3	±12	±8	±8		±8	
±25	±5									±2		±4	±2	±6		±2		±3	±2	±12	±8	±8		±8	
±25	±5													±4						±12	±6	±8		±8	
±25	±5													±4						±10	±6	±6		±6	
±25	±5													±4						±10	±4	±6		±6	
±25	±5																			±10		±6			
±25	±5																			±8		±6			
±25	±5																			±4					

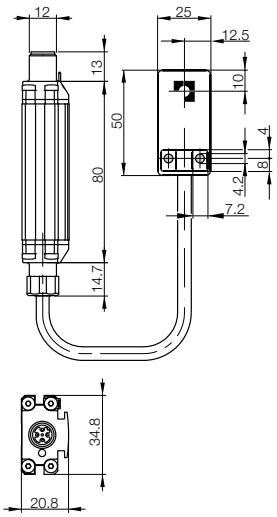

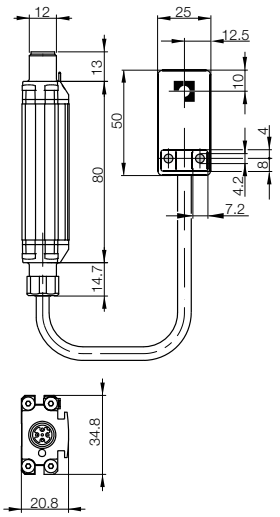

Range of Applications
Selection Criteria
Data carriers
Barrel
Read/write heads
Read/write heads with integrated processor
Block
Read/write heads
Read/write heads with integrated processor
Remote
Read/write heads
Read/write heads with integrated processor
Long range
Read/write heads
Read/write heads with integrated processor
Controller
Antenna
Processors
Gateways
Handheld
Accessories

Read/write head with integrated processor

Compact Antenna Style

IO-Link

For tight mounting spaces
The remote electronics of the integrated version creates extra installation space. For direct connection to the controller

Dimensions			**M18x1,5**
Housing material			Nickel plated brass
Serial	RS232	**Ordering code**	**BIS00EN**
		Part number	BIS M-402-007-002-00-S115
IOLink	10 byte	**Ordering code**	**BIS00LW**
		Part number	BIS M-402-045-002-07-S4
	32 byte	**Ordering code**	**BIS0105**
		Part number	BIS M-402-072-002-07-S4
Mounting			
Supply voltage			24 V DC +10 %
Current			≤ 50 mA no-load / ≤ 150 IO-Link
Operating temperature			0...+70 °C
Storage temperature			–20...+85 °C
Protection per IEC 60529			IP 67
Connection type			1 connector, round 8-pin serial / round 4-pin IO-Link
Accessories included			Configuration software
Connection cable			See Connectivity section for cable options

Data carriers common for both heads

Appropriate data carrier		**BIS0040**	BIS M-105-01/A	**BIS0042**	BIS M-105-02/A	**BIS0048**	BIS M-122-01/A	**BIS004A**	BIS M-122-02/A	**BIS0044**	BIS M-110-02/L	**see data carriers**	BIS M-116-_/A
Data carrier to metal distance in mm		> 10	> 0	> 10	> 0	> 10	> 0	>10	> 0	> 25		> 5	> 0
Data carrier clear zone in mm		> 60	> 0	> 60	> 0	> 60	> 0	> 60	> 0	> 80		> 20	> 20
Write distance in mm		0-5	0-3	0-5	0-3	0-5	0-2	0-5	0-2	0-5		0-7	0-4,5
Read distance in mm		0-5	0-3	0-5	0-3	0-5	0-2	0-5	0-2	0-5		0-7	0-4,5
Offset in mm at distance	0 mm	±3	±2	±3	±2	±3	±2	±3	±2	±8		±4	±3
	5 mm	±2		±2		±2		±2		±8		±3	
	9 mm									±6			
	12 mm									±4			
	15 mm									±4			

Installation note for data carriers

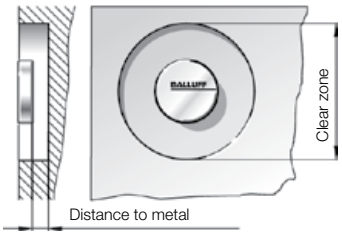

For installation see technical section.

Mounting (see technical section for details):

- flush in steel
- non-flush on steel
- non-metal

Antenna type:

- rod
- round

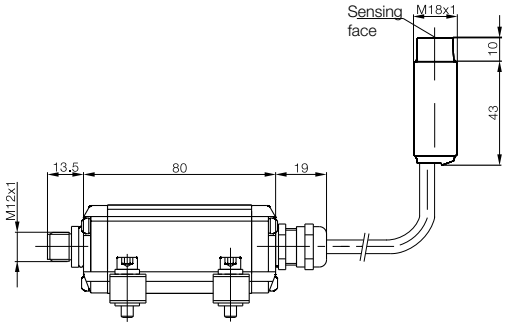

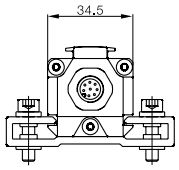

Read/write head with integrated processor

	25x50x10 mm												**25x50x10 mm**								
	aLmGsl 0.5/ABS-GF16												aLmGsl 0.5/ABS-GF16								
	BIS00RU																				
	BIS M-402-007-004-00-S115																				
	BIS00M1												**BIS00UY**								
	BIS M-402-045-004-07-S4												BIS M-402-045-005-07-S4-SA1								
	BIS0106																				
	BIS M-402-072-004-07-S4																				
	⎓												⎓								
	24 V DC +10 %												24 V DC +10 %								
	≤ 50 mA no-load / ≤ 150 IO-Link												≤ 50 mA no-load / ≤ 150 IO-Link								
	0...+70 °C												0...+70 °C								
	–20...+85 °C												–20...+85 °C								
	IP 67												IP 67								
	1 connector, round 8-pin serial / round 4-pin IO-Link												1 connector, round 4-pin IO-Link								
	Configuration software												Configuration software								
	See Connectivity section for cable options												See Connectivity section for cable options								

BIS0040	BIS M-105-01/A	**BIS0042**	BIS M-105-02/A	**BIS0048**	BIS M-122-01/A	**BIS004A**	BIS M-122-02/A	**BIS0044**	BIS M-110-02/L			**BIS0044**	BIS M-110-02/L								
> 10	> 0	> 10	> 0	> 10	> 0	>10	> 0	> 25				> 5									
> 60	> 0	> 60	> 0	> 60	> 0	> 60	> 0	> 80				> 50									
0-5	0-3	0-5	0-3	0-5	0-2	0-5	0-2	0-15				0-6									
0-5	0-3	0-5	0-3	0-5	0-2	0-5	0-2	0-15				0-6									
±3	±2	±3	±2	±3	±2	±3	±2	±8				±8									
±2		±2		±2		±2		±8				±4									
								±4													
								±4													
								±4													

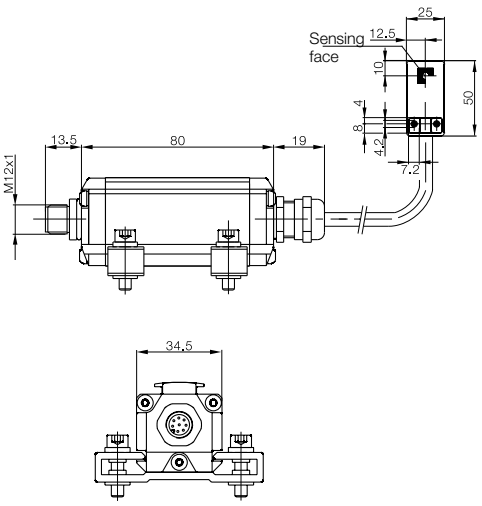

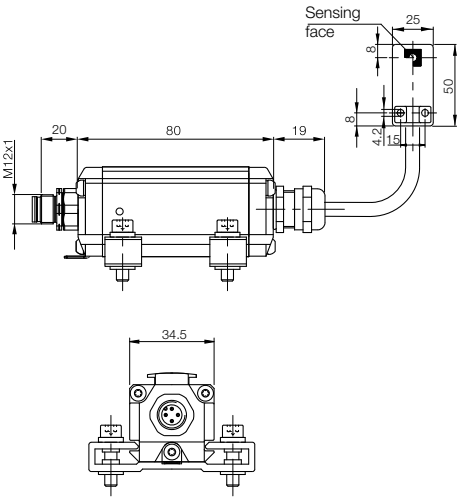

Mounting only with included mounting clamps. Values are under rated conditions unless otherwise specified.

Shielding plate **BAM01Y8**. Read/write device use only with FlexLink systems.

For use with BIS M-402-045-005 head only.

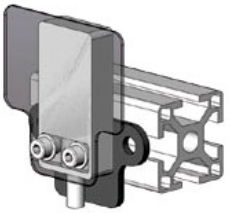

Range of Applications
Selection Criteria
Data carriers
Barrel
Read/write heads
Read/write heads with integrated processor
Block
Read/write heads
Read/write heads with integrated processor
Remote
Read/write heads
Read/write heads with integrated processor
Long range
Read/write heads
Read/write heads with integrated processor
Controller
Antenna
Processors
Gateways
Handheld
Accessories

A Powerful High-frequency Package Ensures Maximum Transparency

- Distances up to 275 mm offer greater flexibility, regardless of the background surface.
- FRAM data carriers ensure virtually unlimited read/write cycles.
- Can be used all over the world thanks to ISO-15693-conformity.
- Status indicators mounted directly on the antenna housing are a valuable feature.
- The robust housing guarantees reliable operation in harsh environments.
- 100 % RFID quality means greater reliability.

One of the challenges of intralogistics is the transportation of constantly changing materials. However, smooth operation and transparent processes are still required in spite of the wide variety of different products. A requirement that is not always easy for RFID systems because metallic surfaces, fluids and dirt really put these systems to the test. Not the HF antenna BIS M-350, however. The antenna is fitted with optimized data carriers that help overcome difficulties of this kind with ease while reliably ensuring maximum transparency. All data can be traced at any time.

The following system versions are available:
- BIS M 350 and 450 (rod antenna)
- BIS M 340 and 440 (circular antenna)

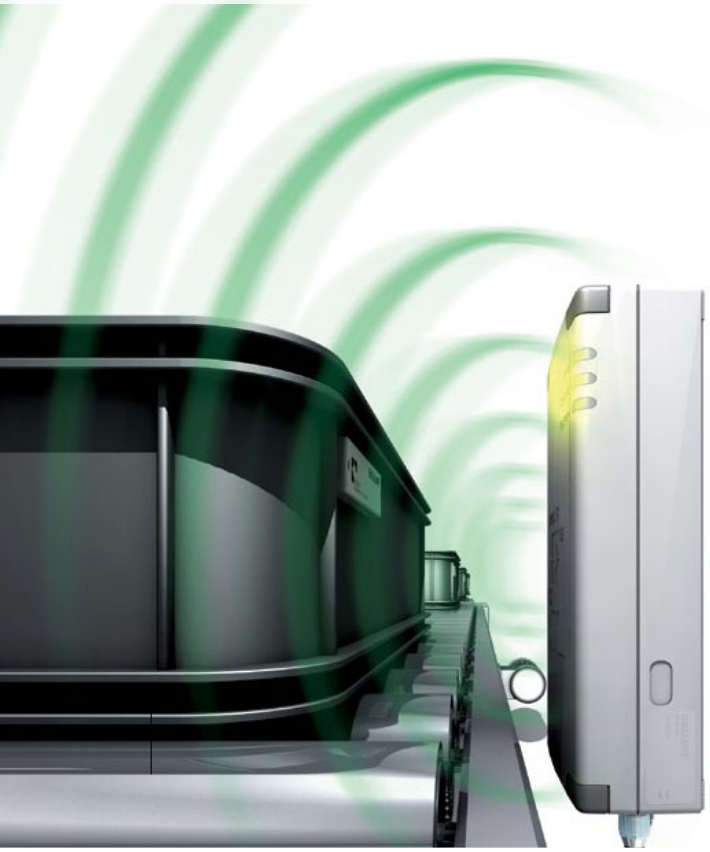

Dimensions		
Housing material		
Standard	**Ordering code**	
	Part number	
Mounting		
Operating temperature		
Storage temperature		
Protection per IEC 60529		
Connection to		
Connection cable		

Appropriate data carrier

Data carrier to metal distance in mm	
Data carrier clear zone in mm (a x b)	

Write distance in mm	
Read distance in mm	
Offset in mm at distance	
0 mm	
25 mm	
50 mm	
75 mm	
100 mm	
150 mm	
200 mm	
250 mm	

For installation see technical section.

Mounting (see technical section for details):

- flush in steel
- non-flush on steel
- non-metal

Antenna type:

- rod
- round

Installation note for data carriers

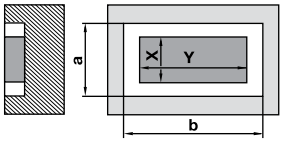

Appropriate data carrier
BIS M-153 and BIS M-107

Long range read/write head

FERROIDENT/Metal Mount

240×120×60 mm				**240×120×60 mm**			
PC				PC			
BIS00LZ				**BIS00N6**			
BIS M-350-001-S115				BIS M-340-001-S115			
0...+55 °C				0...+55 °C			
-20...+85 °C				-20...+85 °C			
IP 65				IP 65			
Processor				Processor			
See Connectivity section for cable options				See Connectivity section for cable options			
BIS00P3		**BIS004H**		**BIS00LC**		**BIS00Y4**	
BIS M-153-02/A		BIS M-151-02/A		BIS M-107-03/L-H200		BIS M-135-03/L-HT	
0		0		> 120		> 120	
> 240×480		> 240×480		> 240×480		> 240×480	
0-275		0-130		0-100		0-200	
0-275		0-130		0-100		0-200	
X	Y	X	Y	X	Y	X	Y
±200	±100	±60	±140	±50	±100	±80	±100
±200	±100	±60	±135	±50	±100	±80	±100
±200	±100	±60	±125	±50	±95	±80	±100
±200	±100	±55	±100	±45	±85	±80	±100
±200	±100			±40	±75	±80	±100
±200	±100					±80	±100
±175	±100					±80	±100
±100	±100						

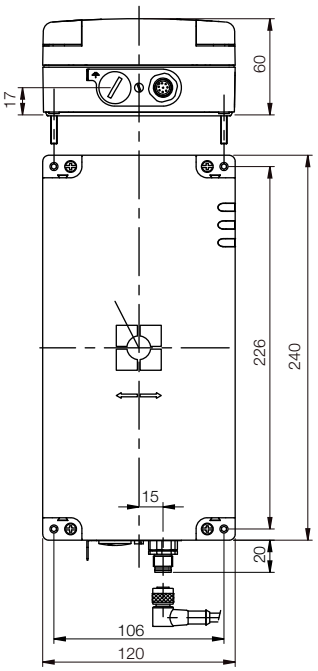

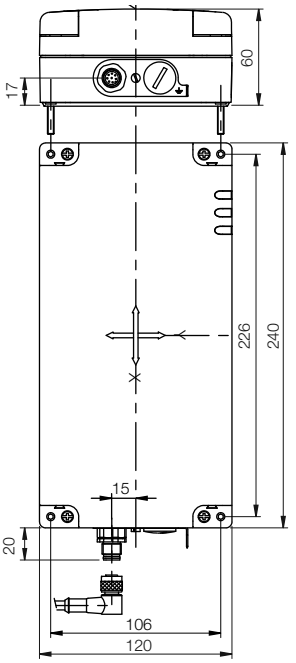

Range of Applications
Selection Criteria
Data carriers
Barrel
Read/write heads
Read/write heads with integrated processor
Block
Read/write heads
Read/write heads with integrated processor
Remote
Read/write heads
Read/write heads with integrated processor
Long range
Read/write heads
Read/write heads with integrated processor
Controller
Antenna
Processors
Gateways
Handheld
Accessories

Long range read/write head with integrated processor

A Powerful High-frequency Package Ensures Maximum Transparency

- Distances up to 275 mm offer greater flexibility, regardless of the background surface.
- FRAM data carriers ensure virtually unlimited read/write cycles.
- Can be used all over the world thanks to ISO-15693-conformity.
- Status indicators mounted directly on the antenna housing are a valuable feature.
- The robust housing guarantees reliable operation in harsh environments.
- 100 % RFID quality means greater reliability.

One of the challenges of intralogistics is the transportation of constantly changing materials. However, smooth operation and transparent processes are still required in spite of the wide variety of different products. A requirement that is not always easy for RFID systems because metallic surfaces, fluids and dirt really put these systems to the test. Not the HF antenna BIS M-350, however. The antenna is fitted with optimized data carriers that help overcome difficulties of this kind with ease while reliably ensuring maximum transparency. All data can be traced at any time.

Dimensions		
Housing material		
Ethernet TCP/IP	**Ordering code**	
	Part number	
Mounting		
Supply voltage		
Current		
Operating temperature		
Storage temperature		
Protection per IEC 60529		
Connection type		
Accessories included		
Connection cable		

Appropriate data carrier	
Data carrier to metal distance in mm	
Data carrier clear zone in mm (a x b)	

Write distance in mm	
Read distance in mm	
Offset in mm at distance	
0 mm	
25 mm	
50 mm	
75 mm	
100 mm	
150 mm	
200 mm	
250 mm	

For installation see technical section.

Mounting (see technical section for details):

- flush in steel
- non-flush on steel
- non-metal

Antenna type:

- rod
- round

Installation note for data carriers

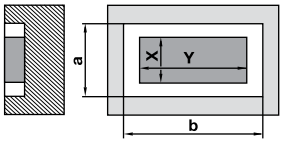

Appropriate data carrier
BIS M-153 and BIS M-107

Long range read/write head with integrated processor

FERROIDENT/Metal Mount

240×120×60 mm	**240×120×60 mm**
PC	PC
BIS00R0	**BIS00PZ**
BIS M-450-039-001-06-ST2	BIS M-440-039-001-06-ST2
19.2 to 28V DC, ≤10% ripple	19.2 to 28V DC, ≤10% ripple
≤1A	≤1A
0...+55 °C	0...+55 °C
-20...+85 °C	-20...+85 °C
IP 65	IP 65
5-pin panel, 4-pin female D code	5-pin panel, 4-pin female D code
Configuration software	Configuration software
See Connectivity section for cable options	See Connectivity section for cable options

BIS00P3		**BIS004H**		**BIS00LC**		**BIS00Y4**	
BIS M-153-02/A		BIS M-151-02/A		BIS M-107-03/L-H200		BIS M-135-03/L-HT	
0		0		> 120		> 120	
> 240×480		> 240×480		> 240×480		> 240×480	
0.-275		0-130		0-100		0-200	
0.-275		0-130		0-100		0-200	
X	Y	X	Y	X	Y	X	
±200	±100	±60	±140	±50	±100	±80	±100
±200	±100	±60	±135	±50	±100	±80	±100
±200	±100	±60	±125	±50	±95	±80	±100
±200	±100	±55	±100	±45	±85	±80	±100
±200	±100			±40	±75	±80	±100
±200	±100					±80	±100
±175	±100					±80	±100
±100	±100						

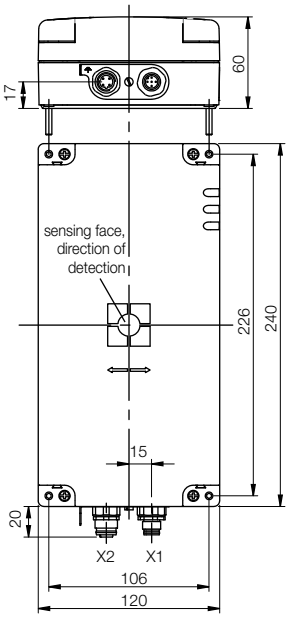

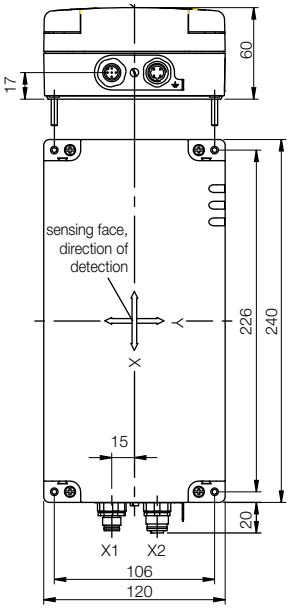

Range of Applications
Selection Criteria
Data carriers
Barrel
Read/write heads
Read/write heads with integrated processor
Block
Read/write heads
Read/write heads with integrated processor
Remote
Read/write heads
Read/write heads with integrated processor
Long range
Read/write heads
Read/write heads with integrated processor
Controller
Antenna
Processors
Gateways
Handheld
Accessories

With the connection of one of several long range or conveyor mount antennas, these high frequency long range self-contained processors can be used to maximize working distances. This controller/antenna combination allows a maximum working envelop to any applications.

These controllers must be used with these antennas: BISM-370, BISM-371, BISM-372, or BISM-373

Controllers

Dimensions			
Housing Material			
Serial	RS232 w/IO	**Ordering code**	
		Part number	
Subnet16*	RS485 w/IO	**Ordering code**	
		Part number	
Ethernet/IP and Ethernet TCP/IP w/IO		**Ordering code**	
		Part number	
Mounting			
Supply voltage, Ripple			
Current			
Operating temperature			
Storage temperature			
Protection per IEC 60529			
Read/write head ports			
Service interface			
Control inputs			
Control outputs			
Connection for			
Connection type			
Accessories included			

*See pages 96-103 for antenna options.

Mounting (see technical section for details):

flush in steel

non-flush on steel

non-metal

Antenna type:

rod

round

Long range controller

114x112x45 mm	**114x112x45 mm**	**114x112x45 mm**
AL	AL	AL
BIS00ZH		
BIS M-620-068-A01-00-ST29*		
	BIS00ZK	
	BIS M-620-067-A01-04-ST30*	
		BIS00ZA
		BIS M-626-069-A01-06-ST32*
⎓	⎓	⎓
12-30 V DC	12-30 V DC	12-30 V DC
≤ 400 mA	≤ 400 mA	≤ 400 mA
-20...+50 °C	-20...+50 °C	-20...+50 °C
-20...+70 °C	-20...+70 °C	-20...+70 °C
IP65	IP65	IP65
1 external	1 external	1 external
no	no	no
1	1	1
2	2	2
com./power + I/O	com./power + I/O	com./power + I/O
8-pin male M12 com + power, 8-pin female M12 I/O	5-pin male M12 com + power, 8-pin female M12 I/O	4-pin female D-code M12 com, 5-pin male M12 power, 8-pin female M12 I/O
2 screws	2 screws	2 screws

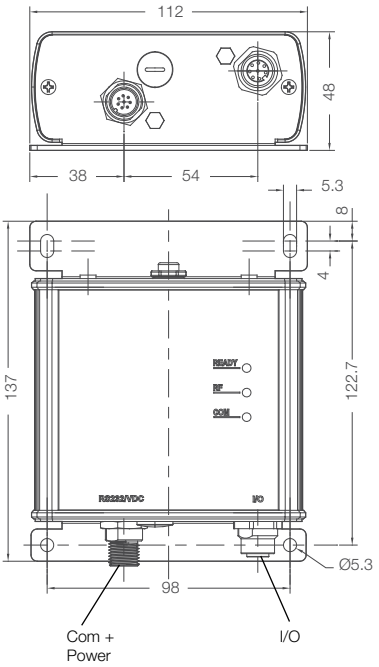

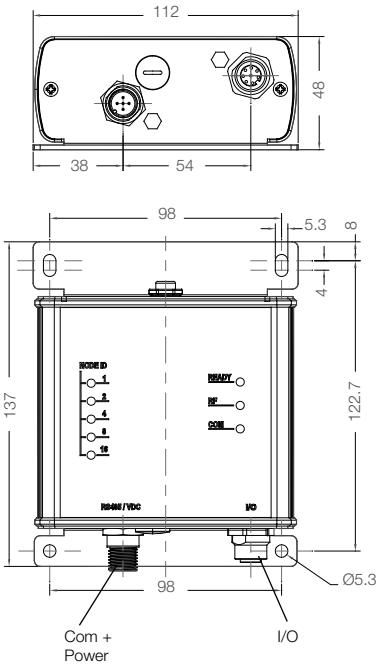

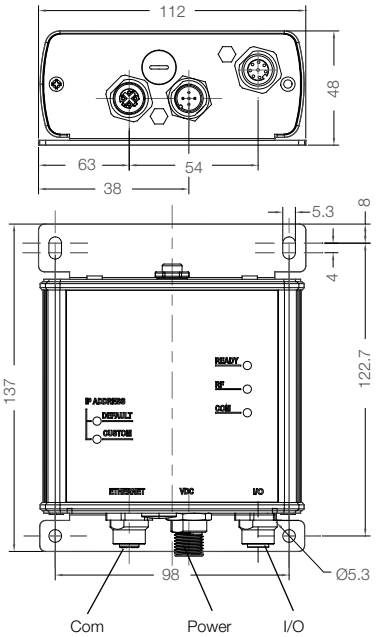

Range of Applications
Selection Criteria
Data carriers
Barrel
Read/write heads
Read/write heads with integrated processor
Block
Read/write heads
Read/write heads with integrated processor
Remote
Read/write heads
Read/write heads with integrated processor
Long range
Read/write heads
Read/write heads with integrated processor
Controller
Antenna
Processors
Gateways
Handheld
Accessories

Long range conveyor antenna

This antenna is specially designed to replace a roller on a roller conveyor, allowing tags to read from under a pallet or container.

These antennae work with these controllers:
BIS M-620-068-A01-00-ST29
BIS M-620-067-A01-04-ST30
BIS M-626-069-A01-06-ST32

Dimensions		
Housing material		
Standard only	**Ordering code**	
	Part number	
Mounting		
Operating temperature		
Storage temperature		
Protection per IEC 60529		
Connection to		
Connection cable (please order separately)		

Appropriate data carrier

Write distance in mm		
Read distance in mm		
Offset in mm at distance		
	50 mm	
	100 mm	

Mounting (see technical section for details):

flush in steel

non-flush on steel

non-metal

Antenna type:

rod

round

Installation note

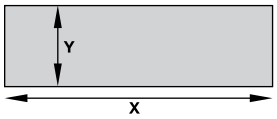

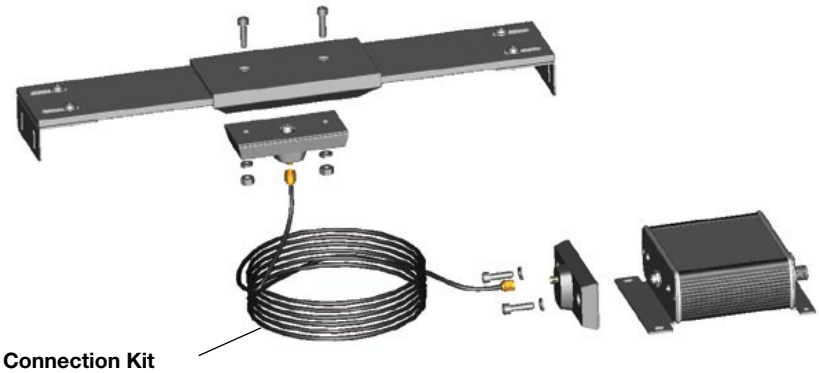

External Antenna Connection Kit
Order code: BIS00WJ
Part number: BIS M-500-PVC-07-A01/02

Long range conveyor antenna

70x500x6 mm			
PA			
BIS00WN			
BIS M-370-000-A02			
-20...+50 °C			
-40...+85 °C			
IP65			
1 internal RCA jack to processor			
Extension cable kit BIS M-500-PVC-07-A01/02			

BIS00YE	BIS M-132-03/L-HT	**BIS00Y5**	BIS M-135-03/L
0-57	0-57	0-127	0-127
0-57	0-57	0-127	0-127
X	Y	X	Y
±100	±10	±100	±10
±80	±10	±80	±10

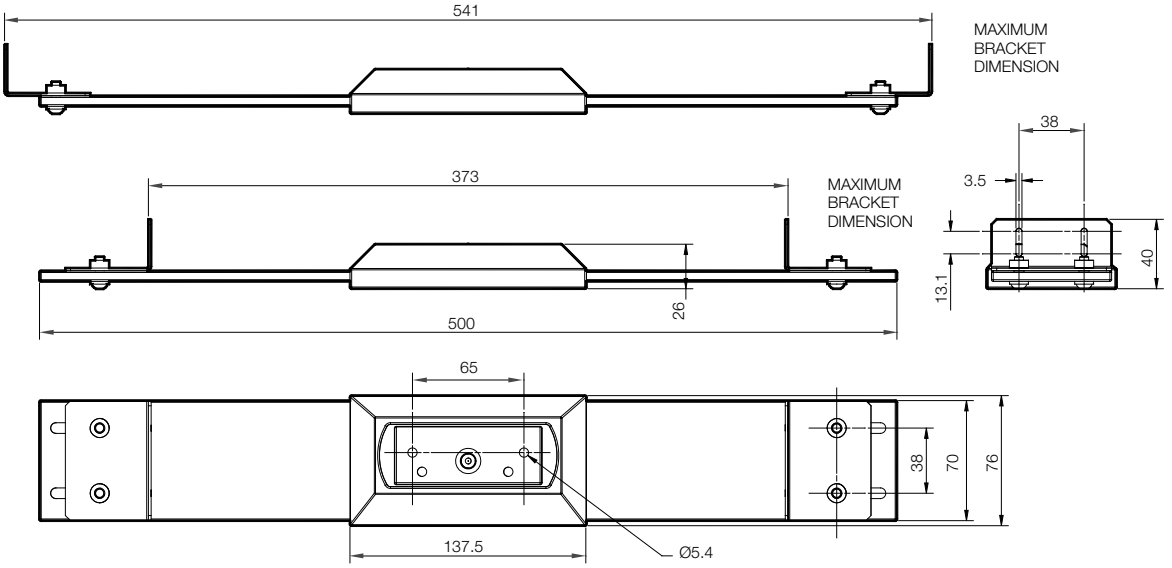

Range of Applications
Selection Criteria
Data carriers
Barrel
Read/write heads
Read/write heads with integrated processor
Block
Read/write heads
Read/write heads with integrated processor
Remote
Read/write heads
Read/write heads with integrated processor
Long range
Read/write heads
Read/write heads with integrated processor
Controller
Antenna
Processors
Gateways
Handheld
Accessories

Long range antenna

This antenna type is well suited for longer range read/write requirements in both logistics and manufacturing line applications.

These antennae work with these controllers:
BIS M-620-068-A01-00-ST29
BIS M-620-067-A01-04-ST30
BIS M-626-069-A01-06-ST32

Dimensions		
Housing material		
Standard only	**Ordering code**	
	Part number	
Mounting		
Operating temperature		
Storage temperature		
Protection per IEC 60529		
Connection to		
Connection cable (please order separately)		

Appropriate data carrier

Write distance in mm	
Read distance in mm	
Offset in mm at distance	
100 mm	
200 mm	

Mounting (see technical section for details):

flush in steel

non-flush on steel

non-metal

Antenna type:

rod

round

Long range antenna

112x100x6 mm																				
PA																				
BIS00WM																				
BIS M-371-000-A01																				
-20...+50 °C																				
-40...+85 °C																				
IP65																				
1 internal RCA jack to processor																				
Extension cable kit BIS M-500-PVC-07-A01/02																				
BIS00YF	BIS M-132-03/L	**BIS00YE**	BIS M-132-03/L-HT	**BIS00Y5**	BIS M-135-03/L	**BIS00Y4**	BIS M-135-03/L/HT	**BIS00W9**	BIS M-136-03/L	**BIS00Y1**	BIS M-136-03/L-HT									
0-152		0-152		0-230		0-257		0-216		0-254										
0-152		0-152		0-230		0-257		0-216		0-254										
±30		±30		±35		±35		±35		±40										
				±10		±30		±10		±30										

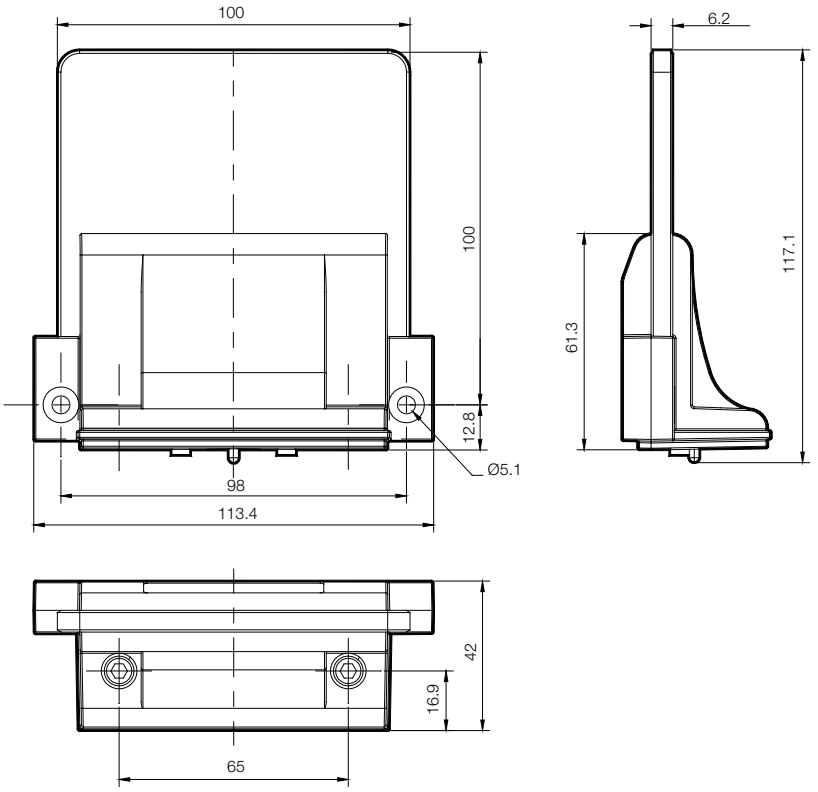

Range of Applications
Selection Criteria
Data carriers
Barrel
Read/write heads
Read/write heads with integrated processor
Block
Read/write heads
Read/write heads with integrated processor
Remote
Read/write heads
Read/write heads with integrated processor
Long range
Read/write heads
Read/write heads with integrated processor
Controller
Antenna
Processors
Gateways
Handheld
Accessories

Long range antenna

This antenna type is well suited for longer range read/write requirements in both logistics and manufacturing line applications.

These antennae work with these controllers:
BIS M-620-068-A01-00-ST29
BIS M-620-067-A01-04-ST30
BIS M-626-069-A01-06-ST32

Dimensions		
Housing material		
Standard only	**Ordering code**	
	Part number	
Mounting		
Operating temperature		
Storage temperature		
Protection per IEC 60529		
Connection to		
Connection cable (please order separately)		

Appropriate data carrier

Write distance in mm	
Read distance in mm	
Offset in mm at distance	
100 mm	
200 mm	

Mounting (see technical section for details):

flush in steel

non-flush on steel

non-metal

Antenna type:

rod

round

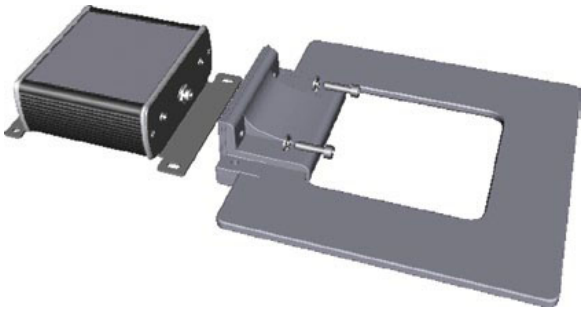

Long range antenna

200x200x6 mm																				
PA																				
BIS00WL																				
BIS M-372-000-A01																				
-20...+50 °C																				
-40...+85 °C																				
IP65																				
1 internal RCA jack to processor																				
Extension cable kit BIS M-500-PVC-07-A01/02																				
BIS00YF	BIS M-132-03/L	**BIS00YE**	BIS M-132-03/L-HT	**BIS00Y5**	BIS M-135-03/L	**BIS00Y4**	BIS M-135-03/L-HT	**BIS00W9**	BIS M-136-03/L	**BIS00Y1**	BIS M-136-03/L-HT									
0-216		0-216		0-350		0-381		0-318		0-381										
0-216		0-216		0-350		0-381		0-318		0-381										
±75		±75		±75		±75		±75		±75										
±10		±10		±75		±75		±75		±75										

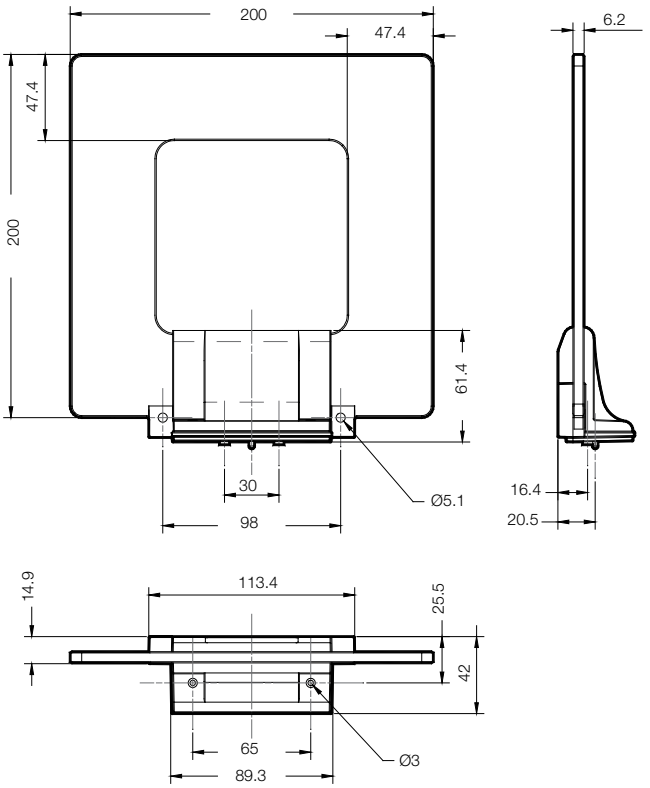

Range of Applications
Selection Criteria
Data carriers
Barrel
Read/write heads
Read/write heads with integrated processor
Block
Read/write heads
Read/write heads with integrated processor
Remote
Read/write heads
Read/write heads with integrated processor
Long range
Read/write heads
Read/write heads with integrated processor
Controller
Antenna
Processors
Gateways
Handheld
Accessories

This antenna is specially designed to replace a roller on a roller conveyor, allowing tags to read from under a pallet or container.

These antennae work with these controllers:
BIS M-620-068-A01-00-ST29
BIS M-620-067-A01-04-ST30
BIS M-626-069-A01-06-ST32

Dimensions		
Housing material		
Standard only	**Ordering code**	
	Part number	
Mounting		
Operating temperature		
Storage temperature		
Protection per IEC 60529		
Connection to		
Connection cable (please order separately)		

Appropriate data carrier

Write distance in mm	
Read distance in mm	
Offset in mm at distance	
100 mm	
200 mm	

Mounting (see technical section for details):

flush in steel

non-flush on steel

non-metal

Antenna type:

rod

round

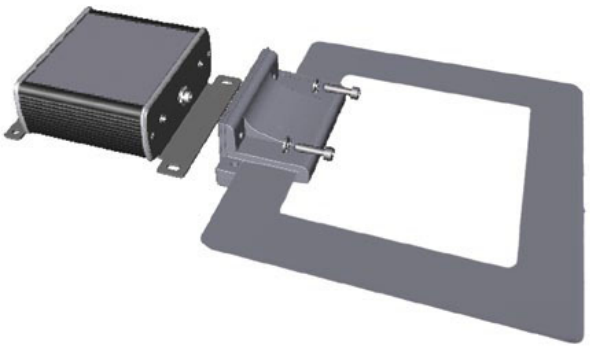

Long range antenna

300x300x6 mm																				
PA																				
BIS00WK																				
BIS M-373-000-A01																				
-20...+50 °C																				
-40...+85 °C																				
IP65																				
1 internal RCA jack to processor																				
Extension cable kit BIS M-500-PVC-07-A01/02																				
BIS00YF	BIS M-132-03/L	**BIS00YE**	BIS M-132-03/L-HT	**BIS00Y5**	BIS M-135-03/L	**BIS00Y4**	BIS M-135-03/L-HT	**BIS00W9**	BIS M-136-03/L	**BIS00Y1**	BIS M-136-03/L-HT									
0-238		0-228		0-380		0-406		0-356		0-432										
0-238		0-228		0-380		0-406		0-356		0-432										
±100		±100		±110		±110		±110		±125										
±100		±100		±110		±110		±110		±125										

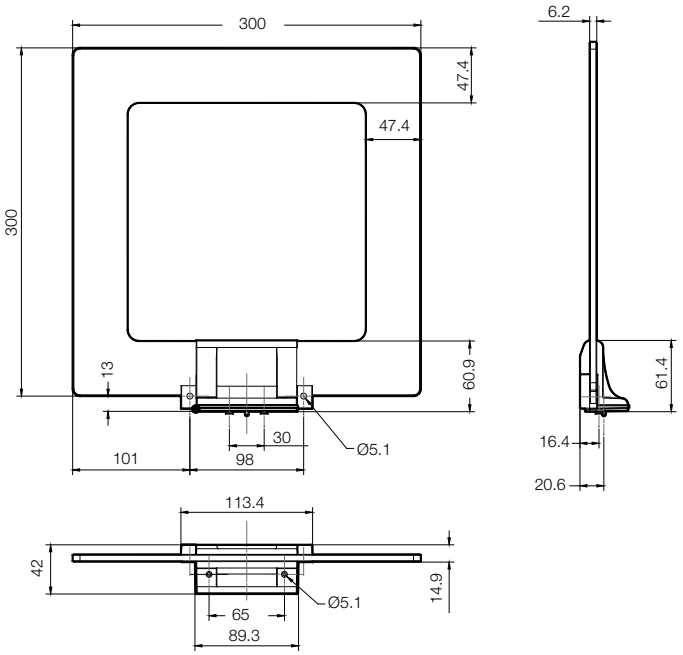

Range of Applications
Selection Criteria
Data carriers
Barrel
Read/write heads
Read/write heads with integrated processor
Block
Read/write heads
Read/write heads with integrated processor
Remote
Read/write heads
Read/write heads with integrated processor
Long range
Read/write heads
Read/write heads with integrated processor
Controller
Antenna
Processors
Gateways
Handheld
Accessories

Description			
Serial	RS232	**Ordering code**	
		Part number	
Supply voltage, Ripple			
Current			
Operating temperature			
Storage temperature			
Protection per IEC 60529			
Read/write head ports			
Service interface			
Control inputs			
Control outputs			
Connection for			
Connection type			
Accessories included			
Connection cable			

Processor	Processor
BIS00N1	**BIS00J0**
BIS M-6000-007-050-00-ST15	BIS M-6000-007-050-00-ST24
19.2 to 28.8V DC, ≥10%	19.2 to 28.8V DC, ≥10%
24V DC ≤ 400mA	24V DC ≤ 400mA
0...+60 °C	0...+60 °C
0...+60 °C	0...+60 °C
IP65 (with connectors)	IP65 (with connectors)
2 external	2 external
RS232	RS232
1 (optocoupler isolated)	1 (optocoupler isolated)
	4
2 read/write heads BIS M-3_ _-001	2 read/write heads BIS M-3_ _-001
X1=24V DC(5-pin), X2=RS232(4-pin)	X1=24V DC(5-pin), X2= IO(8-pin), X3=RS232(5-pin B-coded)
Software	Software
See Connectivity section for cable options	See Connectivity section for cable options

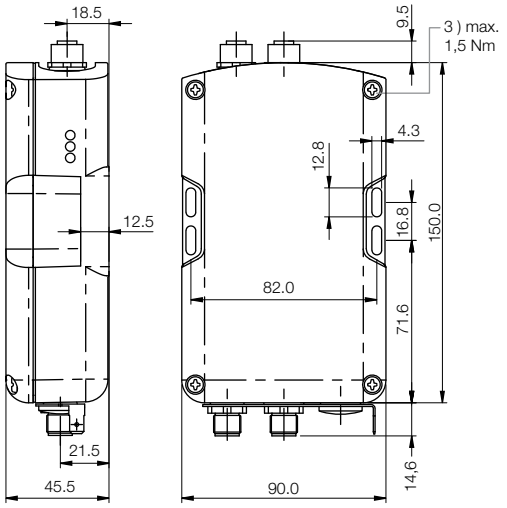

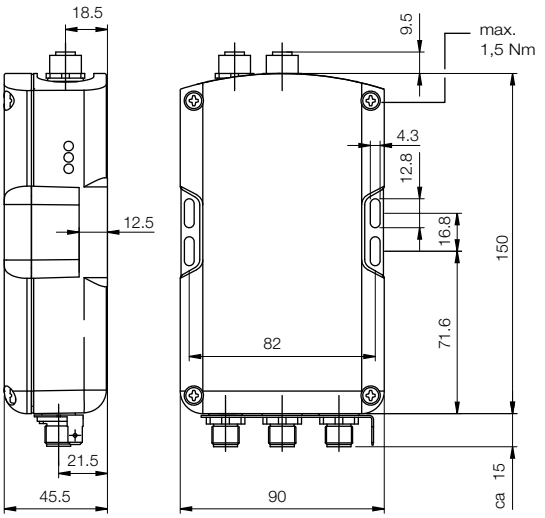

Range of Applications
Selection Criteria
Data carriers
Barrel
Read/write heads
Read/write heads with integrated processor
Block
Read/write heads
Read/write heads with integrated processor
Remote
Read/write heads
Read/write heads with integrated processor
Long range
Read/write heads
Read/write heads with integrated processor
Controller
Antenna
Processors
Gateways
Handheld
Accessories

PROFIBUS-DP

Cost-effective identification – operate 2 read/write heads simultaneously

- Selectable division of the data width on the PROFIBUS-DP, 4 to 128 bytes
- Free assigning of the data width for each read/write head
- Optimum data speed, internal cycle time is shorter than the BUS activation time
- Service friendly, all parameter data are stored in an exchangeable memory
- BUS address selectable with switches
- Accepts all read/write heads

Description		
PROFIBUS-DP	**Ordering code**	
	Part number	
Supply voltage, Ripple		
Current		
Operating temperature		
Storage temperature		
Protection per IEC 60529		
Read/write head ports		
Service interface		
Connection for		
Connection type		
Accessories included		
Connection cable		

The **BIS M-6002 processor** features a small form factor and flexible interface options for use wherever ambient conditions require IP 65 protection.

These models are ideal also when no aggressive media are used with PS plastic.

Small, compact, flexible and cost-effective

Processors

In robust metal housing

Processor	Processor
BIS00EW	**BIS00F0**
BIS M-6002-019-050-03-ST11	BIS M-6022-019-050-03-ST14
24 V DC ±20 %, ≤ 10 %	24 V DC ±20 %, ≤ 10 %
≤ 400 mA	≤ 400 mA
0...+60 °C	0...+60 °C
0...+60 °C	0...+60 °C
IP 65	IP 65
2 external	2 external
RS232	RS232
2 read/write heads BIS M-3_ _-001	2 read/write heads BIS M-3_ _-001
2 connectors round 5-pin, B-coded	2 connectors round 5-pin, B-coded
1 connector round 5-pin	2 connectors round 5-pin
Software GSD file	Software GSD file
See Connectivity section for cable options	See Connectivity section for cable options

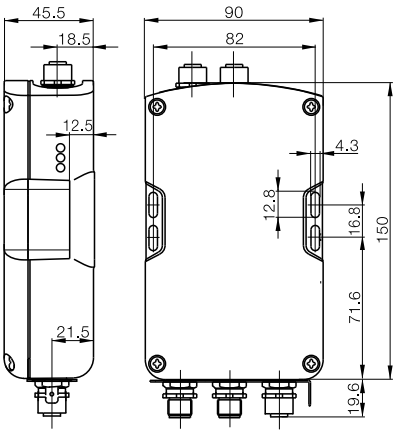

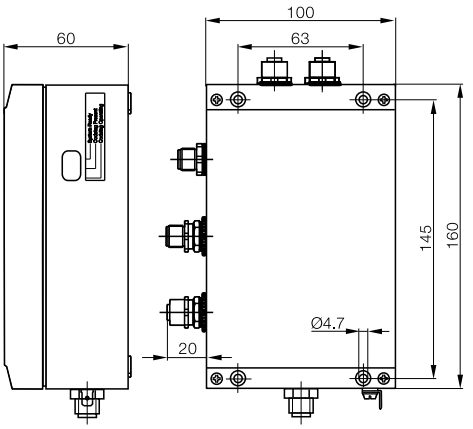

Range of Applications
Selection Criteria
Data carriers
Barrel
Read/write heads
Read/write heads with integrated processor
Block
Read/write heads
Read/write heads with integrated processor
Remote
Read/write heads
Read/write heads with integrated processor
Long range
Read/write heads
Read/write heads with integrated processor
Controller
Antenna
Processors
Gateways
Handheld
Accessories

The rugged BIS M-6022 with the die-cast aluminum housing is a small, flexible processor which is available with various interface options.

Great mechanical stability and high chemical resistance.

Rugged, small and flexible

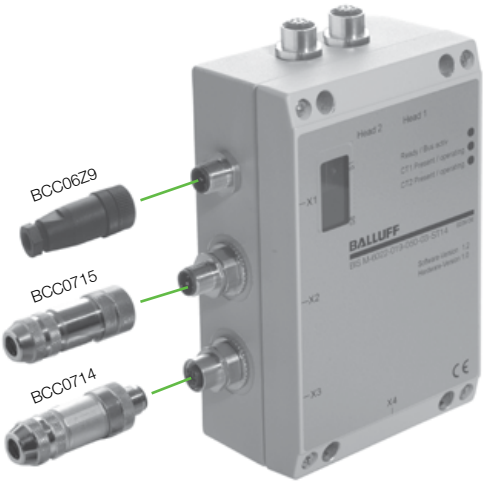

Threaded cover
Ordering code: BAM0114
Part number: BKS 12-CS-01
coded for M12 connector type

Cost-effective identification – operate 2 read/write heads simultaneously

- Freely selectable buffer size between 0 and 256 bytes
- Service friendly, all parameter data are stored in an exchangeable memory
- Accepts all read/write heads

Description		
DeviceNet	**Ordering code**	
	Part number	
Supply voltage, Ripple		
Current		
Operating temperature		
Storage temperature		
Protection per IEC 60529		
Read/write head ports		
Service interface		
Connection for		
Connection type		
Accessories included		
Connection cable		

The **BIS M-6003 processor** features a small form factor and flexible interface options for use wherever ambient conditions require IP 65 protection.

These models are ideal also when no aggressive media are used with PS plastic.

Small, compact, flexible and cost-effective

Processors

In robust metal housing

Processor	Processor
BIS00EY	**BIS00F1**
BIS M-6003-025-050-03-ST12	BIS M-6023-025-050-03-ST13
24 V DC ±20 %, ≤ 10 %	24 V DC ±20 %, ≤ 10 %
≤ 400 mA	≤ 400 mA
0...+60 °C	0...+60 °C
0...+60 °C	0...+60 °C
IP 65	IP 65
2 external	2 external
RS232	RS232
2 read/write heads BIS M-3_ _-001	2 read/write heads BIS M-3_ _-001
3 connectors round 5-pin	4 connectors round 5-pin
Software EDS file	Software EDS file
See Connectivity section for cable options	See Connectivity section for cable options

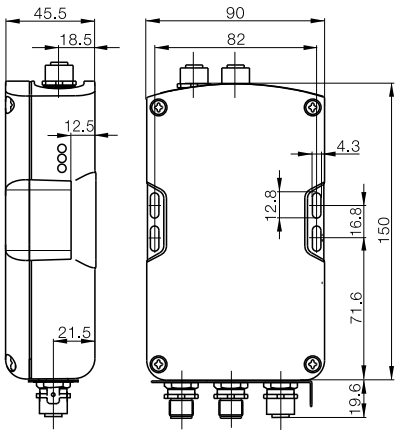

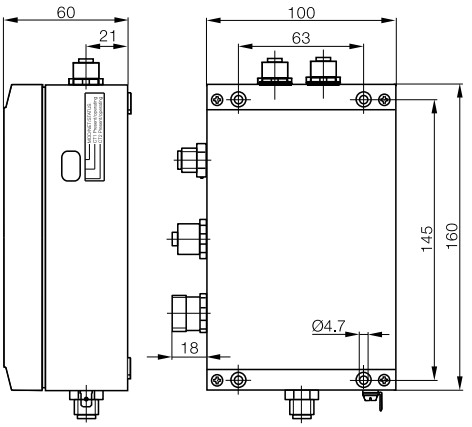

The **rugged BIS M-6023** with the die-cast aluminum housing is a small, flexible processor which is available with various interface options.

Great mechanical stability and high chemical resistance.

Rugged, small and flexible

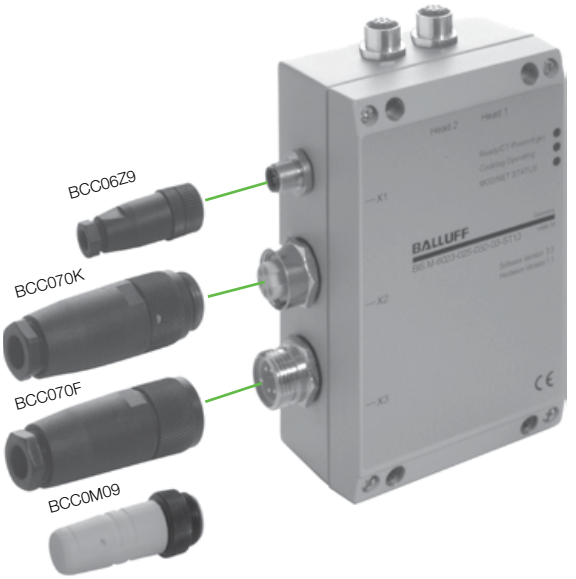

Range of Applications
Selection Criteria
Data carriers
Barrel
Read/write heads
Read/write heads with integrated processor
Block
Read/write heads
Read/write heads with integrated processor
Remote
Read/write heads
Read/write heads with integrated processor
Long range
Read/write heads
Read/write heads with integrated processor
Controller
Antenna
Processors
Gateways
Handheld
Accessories

In robust metal housing

Description		Processor
EtherNet/IP	**Ordering code**	**BIS00F2**
	Part number	BIS M-6026-034-050-06-ST19
Supply voltage, Ripple		24 V DC ±20 %, ≤ 10 %
Current		≤ 400 mA
Operating temperature		0...+60 °C
Storage temperature		0...+60 °C
Protection per IEC 60529		IP 65
Read/write head ports		2 external
Service interface		RS232
Connection for		2 read/write heads BIS M-3_ _
Connection type		Connector round 4-pin, D-coded 1 connector 5-pin 1 connector 4-pin
Accessories included		Configuration software
Connection cable		See Connectivity section for cable options

Cost-effective identification – operate 2 read/write heads simultaneously.

Rugged processor for EtherNet/IP networks

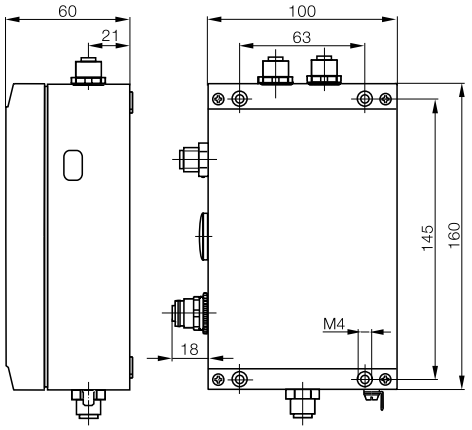

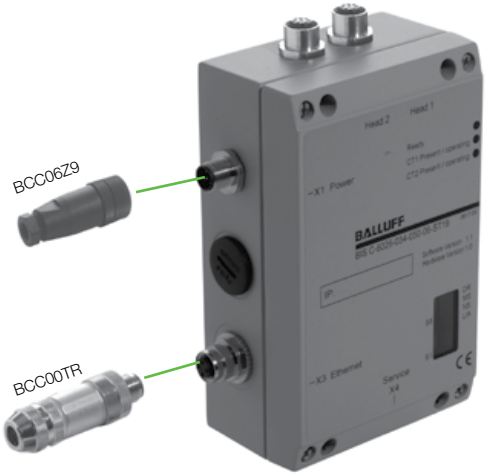

BIS M Industrial RFID Systems

Processors

Description		Processor
EtherNet TCP/IP	**Ordering code**	**BIS00EP**
	Part number	BIS M-407-039-003-06-S115
Supply voltage, Ripple		24 V DC ±20 %, ≤ 10 %
Current		≤ 150 mA
Operating temperature		0...+60 °C
Storage temperature		0...+60 °C
Protection per IEC 60529		IP 67
Read/write head ports		1 external
Service interface		none
Connection for		1 read/write head BIS M-3_ _-003-_ _ _
Connection type		1 connector round 4-pin, D-coded 1 connector round 5-pin
Accessories included		Configuration software
Connection cable		See Connectivity section for cable options

Small and compact –
for one read head
Easy to connect to any
PC-based controller.

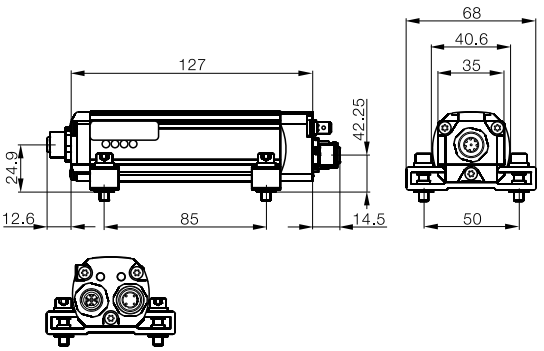

For use only with these read heads
BIS M-300-**003**-S115
BIS M-301-**003**-S115
BIS M-302-**003**-S115
BIS M-304-**003**-S115
see page 56/58/60/66

Range of Applications
Selection Criteria
Data carriers
Barrel
Read/write heads
Read/write heads with integrated processor
Block
Read/write heads
Read/write heads with integrated processor
Remote
Read/write heads
Read/write heads with integrated processor
Long range
Read/write heads
Read/write heads with integrated processor
Controller
Antenna
Processors
Gateways
Handheld
Accessories

Rugged processors for Profinet

Description		Processor
PROFINET RT	**Ordering code**	**BIS00L7**
with IRT-capable 2-PORT switch	Part number	BIS M-6008-048-050-06-ST23
Supply voltage, Ripple		24 V DC ±10 %, ≤ 10 %
Current		≤ 400 mA
Operating temperature		0...+60 °C
Storage temperature		0...+60 °C
Protection per IEC 60529		IP 65
Read/write head ports		2 external
Service interface		RS232 internal
Connection for		Read/write heads BIS M-3_ _-001
Connection type		Connector round 5-pin, A-coded 2 connectors 4-pin, D-coded
Accessories included		Configuration software
Connection cable		See Connectivity section for cable options

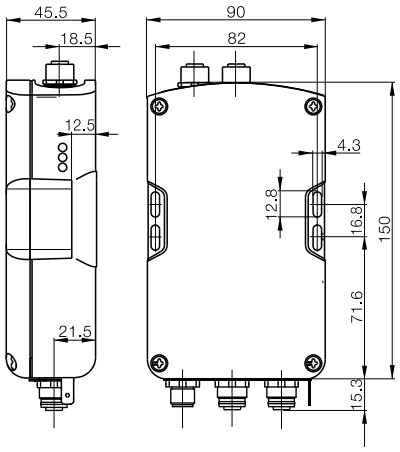

Processors

Processor	Processor
BIS00KZ	**BIS00TW**
BIS M-6028-048-050-06-ST22	BIS M-6028-048-050-06-ST28
24 V DC ±10 %, ≤ 10 %	24 V DC ±10 %, ≤ 10 %
≤ 400 mA	≤ 400 mA
0...+60 °C	0...+60 °C
0...+60 °C	0...+60 °C
IP 65	IP 65
2 external	2 external
RS232	RS232
Read/write heads BIS M-3_ _-001	Read/write heads BIS M-3_ _-001
1 connector 5-pin, Push-pull AIDA	1 connector 7/8" 5-pin
2 connectors 8-pin, Push-pull RJ45 AIDA	2 connectors M-12 D-coded 5-pin
Connector round 4-pin	Connector round 4-pin
Configuration software	Configuration software
See Connectivity section for cable options	See Connectivity section for cable options

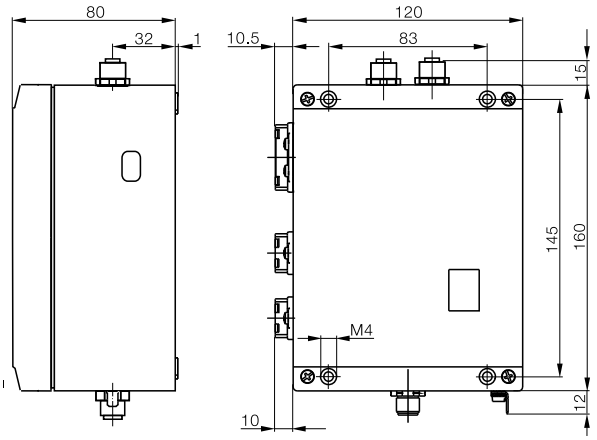

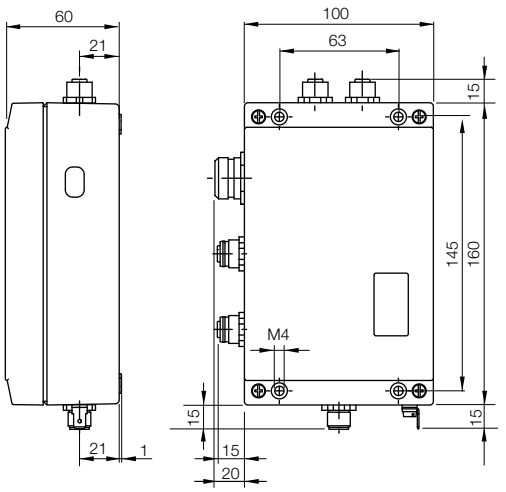

Range of Applications
Selection Criteria
Data carriers
Barrel
Read/write heads
Read/write heads with integrated processor
Block
Read/write heads
Read/write heads with integrated processor
Remote
Read/write heads
Read/write heads with integrated processor
Long range
Read/write heads
Read/write heads with integrated processor
Controller
Antenna
Processors
Gateways
Handheld
Accessories

Processor for Mitsubishi controller

Suitable for every environment

Identification without diversions

Dimensions		Processor
CPU for MELSEC-Q BUS interface by Mitsubishi	**Ordering code**	**BIS00HM**
	Part number	BIS M-688-001
CC Link	**Ordering code**	**BIS00RY**
	Part number	BIS M-688-002
Supply voltage, Ripple		21.6 to 26.4V DC, inclusive
Current		<500mA
Operating temperature		0...+55 °C
Storage temperature		-25...+75 °C
Protection per IEC 60529		IP 20
Read/write head ports		Up to 2
Connection type		BUS direct

For installation see technical section.

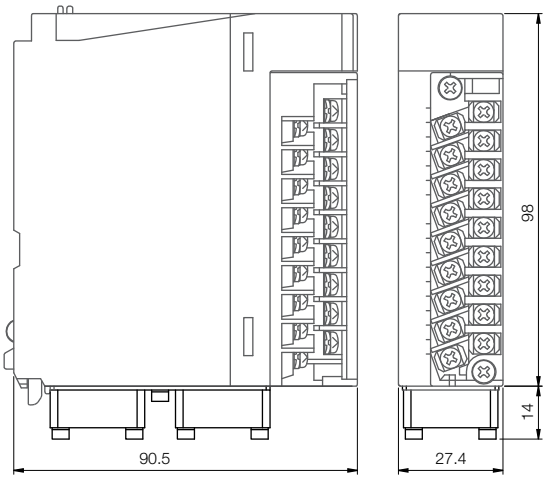

BIS M Industrial RFID Systems

Processor for Mitsubishi controls

- Flexible use due to a wide range of different combinations of data carriers and antennas
- Up to two antennas per processor
- Tested quality with CC-Link certificate
- Make use of timesaving features: Connector-based cabling, robust housing that is easy to install, preassembled function modules and diagnostics function that enable easy commissioning

The CC Link field bus protocol ensures quick, robust communication between different stations. The new BIS M-699 processor can now be used directly in the field. Conformity with standards ISO 15693 and 14443 as well as globally approved frequency of 13.56 MHz allow worldwide use of this CC-Link processor.

Dimensions	Processor
Ordering code	**BIS00LY**
Part number	BIS M-699-052-050-03-ST11
Supply voltage, Ripple	LPS CL. 2 supplied only, 21.6 to 26.4V DC, ≥10%
Current	≤800mA
Operating temperature	0...+55 °C
Storage temperature	-25...+75 °C
Protection per IEC 60529	IP 65 (with connectors)
Read/write head ports	2
Service interface	CC-Link
Connection for	2 read/write heads BIS M-3_ _-001
Connection type	X1=24V DC(5-pin), X2= CC-Link In:(Panel Connector 5-pin), X3=CC-Link Out:(Panel connector 5-pin)
Accessories (please order separately)	For X1=BCC06ZG, X2=BCC06ZN, X3=BCC086A

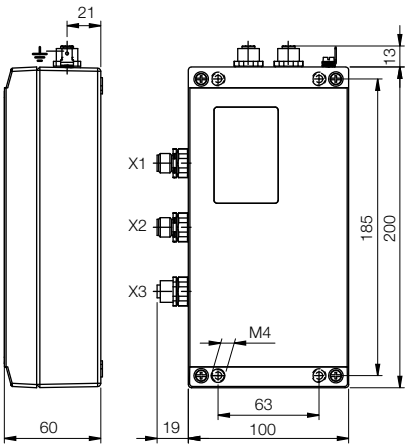

The HF processor BIS M-699 with 13.56 MHz is used directly in the field in all applications where robust controllers are connected directly to CC-Link. Thanks to the wide variety of special data carriers, for example, optimized for flush installation in metal, for temperatures up to 200 °C or for the maximum distance, this HF processor can be used in almost all industrial sectors.

Range of Applications
Selection Criteria
Data carriers
Barrel
Read/write heads
Read/write heads with integrated processor
Block
Read/write heads
Read/write heads with integrated processor
Remote
Read/write heads
Read/write heads with integrated processor
Long range
Read/write heads
Read/write heads with integrated processor
Controller
Antenna
Processors
Gateways
Handheld
Accessories

BIS V New Generation

A new generation system for more flexible RFID:
Combine up to four low and high frequency read/write heads with I/O in one device.
The BIS V Radio Frequency Identification (RFID) system is founded on a new generation of RFID processors that maximize your flexibility by providing a single device for both low frequency 125Khz and high frequency 13.56Mhz read/write heads with an IO-Link master port. Combining up to four heads on either frequency with local analog, valve manifold or I/O access/control provides a solution you can apply to many types of RFID applications.This can save cost and time using a single processor platform across your application installation base. The BIS V system also allows you to draw on a single processor family with a wide array of read/write head and RFID tag options for both manufacturing and logistics solutions.

The BIS V RFID system offers a higher level of performance than other systems to solve today's industrial applications. Designed to maximize performance while improving usability out on the line, the BIS V processor provides a functional display and LED's making status and setup easier. And a USB service interface makes connection for setup to today's PC's simple. The BIS V offers these additional functions:

- Four asynchronous 125Khz and 13.56Mhz read/write antenna channels.
- LCD display with control buttons for setting and displaying the Profibus address and data carrier/tags UID.
- An integrated IO-Link master port for connecting discrete or analog I/O, or valve manifolds.
- Intelligent power plug option for saving parameters on the device.
- Industrial IP rated metal housing for any application environment.
- Flexible mounting options for hard-point or DIN rail.

Description		
PROFIBUS-DP	**Ordering code**	
	Part number	
EtherCAT	**Ordering code**	
	Part number	
CC-Link	**Ordering code**	
	Part number	
Ethernet/IP	**Ordering code**	
	Part number	
Supply voltage, Ripple		
Current		
Operating temperature		
Storage temperature		
Protection per IEC 60529		
Read/write head ports		
Service interface		
Control inputs / outputs		
Connection for		
Connection type		
Accessories included		
Connection cable		

See pages 62, 68, 70, 84, 86 for read/write heads.

The following communication options will become available in 2013/2014:
Ethernet/IP, CC-Link, ProfiNet, and TCP/IP

Processors

	BIS V RFID Unit	**BIS V RFID Unit**	**BIS V RFID Unit**
	BIS00T3		
	BIS V-6102-019-C001		
			BIS00U9
			BIS V-6110-063-C002
	BIS010P		
	BIS V-6111-073-C003		
		BIS0122	
		BIS V-6106-034-C004	
	24V DC ±10% LPS Class 2, ≤ 10%	24V DC ±10% LPS Class 2, ≤ 10%	24V DC ±10% LPS Class 2, ≤ 10%
	≤ 2 A	≤ 2 A	≤ 2 A
	0...+60 °C	0...+60 °C	0...+60 °C
	0...+60 °C	0...+60 °C	0...+60 °C
	IP 65	IP 65	IP 65
	4 - M12 5-pin A-coded	4 - M12 5-pin A-coded	4 - M12 5-pin A-coded
	IO-Link 1.1, USB 2.0	IO-Link 1.1, USB 2.0	IO-Link 1.1, USB 2.0
	IO-Link based	IO-Link based	IO-Link based
	4 Read/write head BIS VM-3_ _ _	4 Read/write head BIS VM-3_ _ _	4 Read/write head BIS VM-3_ _ _
	7/8" plug, 5-pin power	7/8" plug, 4-pin power	7/8" plug, 5-pin power
	Configuration software	Configuration software	Configuration software
	See Connectivity section for cable options	See Connectivity section for cable options	See Connectivity section for cable options

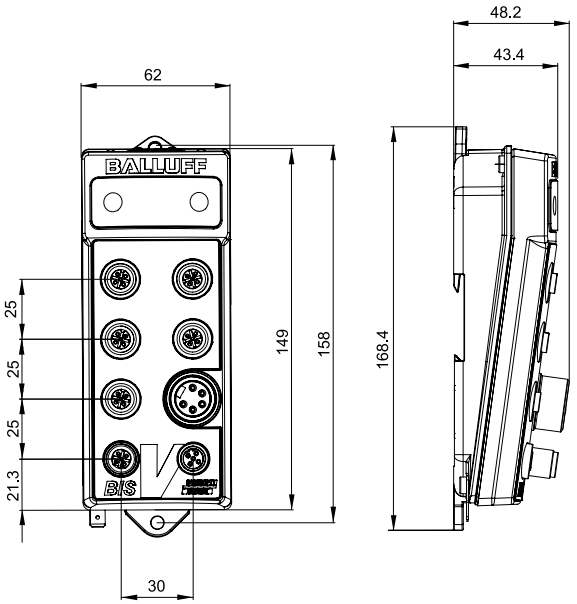

Range of Applications
Selection Criteria
Data carriers
Barrel
Read/write heads
Read/write heads with integrated processor
Block
Read/write heads
Read/write heads with integrated processor
Remote
Read/write heads
Read/write heads with integrated processor
Long range
Read/write heads
Read/write heads with integrated processor
Controller
Antenna
Processors
Gateways
Handheld
Accessories

Subnet16™ Gateways

Dimensions		
Housing material		
RS232	**Ordering code**	
	Part number	
Ethernet/IP Modbus TCP, TCP/IP	**Ordering code**	
	Part number	
Profibus	**Ordering code**	
	Part number	
Ethernet TCP/IP	**Ordering code**	
	Part number	
Supply voltage, Ripple		
Operating temperature		
Protection per IEC 60529		
Service interface		
Connection for		
Connection type		
Connection cables		

For installation see technical section.

See page 78 and 80 for read/write heads or pages 94-95 long range read/write head and controller options.

89x76x32 mm	**89x76x32 mm**	**89x76x32 mm**	**89x76x32 mm**
AL	AL	AL	AL
BAE00JL			
BIS Z-GW-001-RS232			
	BAE00JJ		
	BIS Z-GW-001-IND		
		BAE00JK	
		BIS Z-GW-001-PBS	
			BAE00JM
			BIS Z-GW-001-TCP
10-30V DC by net	10-30V DC by net	10-30V DC by net	10-30V DC by net
0...+50 °C	0...+50 °C	0...+50 °C	0...+50 °C
IP 30	IP 30	IP 30	IP 30
none	none	USB	none
1 RS232 port, 1 RS485 port + Power, M12 8 pin, M12 5 pin	1 Ethernet port, RS485 port + Power, RJ45, M12 5 pin	1 Profibus port, 1 RS485 port + Power, USB type B, M12 Sub D 9 pin, M12 5 pin	1 Ethernet port, RS485 port + Power RJ45, M12 5 pin
M12x2 for BIS M-41_-067	M12x2	M12x2	M12x2
See Connectivity section for cable options	See Connectivity section for cable options	See Connectivity section for cable options	See Connectivity section for cable options

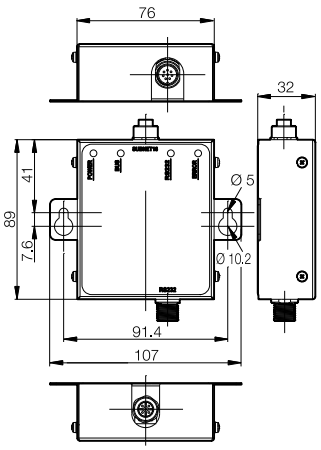

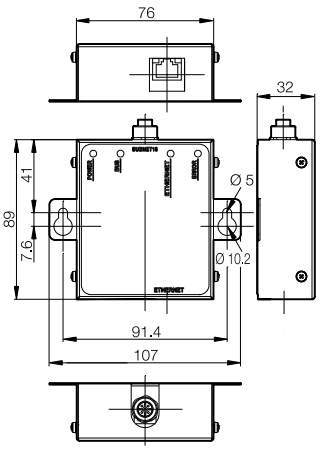

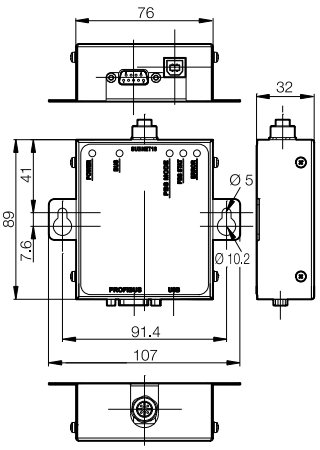

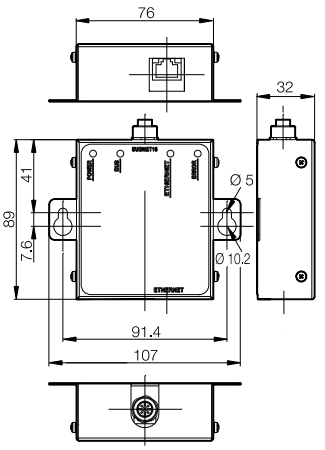

Range of Applications
Selection Criteria
Data carriers
Barrel
Read/write heads
Read/write heads with integrated processor
Block
Read/write heads
Read/write heads with integrated processor
Remote
Read/write heads
Read/write heads with integrated processor
Long range
Read/write heads
Read/write heads with integrated processor
Controller
Antenna
Processors
Gateways
Handheld
Accessories

Standard handheld

For enhanced operating convenience

Allows portable writing and reading of BIS M data carriers.
Easy operation thanks to:
- Touchscreen with large Windows CE® color display
- Pre-installed Balluff software and keyboard or stylus

Ideal for poor light conditions and challenging environments. Data transfer via optional Bluetooth or wired USB. The handheld is also modular for expandability.

Additional convenience

A pistol grip is provided for ergonomic comfort.

Antenna type		
Function		
Housing material		
Standard base	**Ordering code**	
	Part number	
Standard + WLAN module	**Ordering code**	
	Part number	
Standard + 1D code reader	**Ordering code**	
	Part number	
Standard + 2D code reader	**Ordering code**	
	Part number	
Standard + ID code reader + WLAN	**Ordering code**	
	Part number	
Standard +2D code reader + WLAN	**Ordering code**	
	Part number	
Keyboard		
Display		
Supply voltage		
Capacity		
Interface		
Working temperature		
Degree of protection in accordance with IEC 60529		
Read/write head option		
Accessories included		
Appropriate data carrier		
Please order additional accessories separately		

Antenna type:

rod

round

Handheld Standard **BIS M-87_-1-008-x-000_**
Includes charger and stylus

Recommended accessories
(please order separately)

Description	Pistol grip option	Optional docking station with power supply	Replacement battery 4000mAh rechargeable battery	Hand grip for ergonomic use For read/write heads or read/write heads with integrated processors
Part code	**FHW0004**	**FHW0003**	**WA3010**	**BAM012J**
Part number	11023836	11023834	162936	BIS Z-HG-002

BIS M Industrial RFID Systems

Standard handheld

General purpose	Rod	Tool ID	Tool ID remote head
Read/write	Read/write	Read/write	Read/write
ABS	ABS	ABS	ABS
BAE00HT		**BAE00HY**	**BAE00J2**
BIS M-870-1-008-X-000-3000	BIS M-871-1-008-X-000-3000	BIS M-873-1-008-X-000-3000	BIS M-874-1-008-X-000-3000
BIS M-870-1-008-X-001-3000	BIS M-871-1-008-X-001-3000	BIS M-873-1-008-X-001-3000	BIS M-874-1-008-X-001-3000
BIS M-870-1-008-X-002-3000	BIS M-871-1-008-X-002-3000	BIS M-873-1-008-X-002-3000	BIS M-874-1-008-X-002-3000
BIS M-870-1-008-X-003-3000	BIS M-871-1-008-X-003-3000	BIS M-873-1-008-X-003-3000	BIS M-874-1-008-X-003-3000
BIS M-870-1-008-X-004-3000	BIS M-871-1-008-X-004-3000	BIS M-873-1-008-X-004-3000	BIS M-874-1-008-X-004-3000
BAE00HL	**BAE00HM**	**BAE00HP**	
BIS M-870-1-008-X-005-3000	BIS M-871-1-008-X-005-3000	BIS M-873-1-008-X-005-3000	BIS M-874-1-008-X-005-3000
52 buttons, alphanumeric	52 buttons, alphanumeric	52 buttons, alphanumeric	52 buttons, alphanumeric
TFT Touchscreen display	TFT Touchscreen display	TFT Touchscreen display	TFT Touchscreen display
3.7 V rechargeable battery pack	3.7 V rechargeable battery pack	3.7 V rechargeable battery pack	3.7 V rechargeable battery pack
4000 mA/h	4000 mA/h	4000 mA/h	4000 mA/h
RS232/Balluff Dialog	RS232/Balluff Dialog	RS232/Balluff Dialog	RS232/Balluff Dialog
–10...+50 °C	–10...+50 °C	–10...+50 °C	–10...+50 °C
IP 65	IP 65	IP 65	IP 65
Integrated	Integrated	Integrated	Integrated
Charging power supply and stylus	Charging power supply and stylus	Charging power supply and stylus	Charging power supply and stylus
for BIS M-Data carrier	for BIS M-Data carrier	for BIS M-Data carrier	for BIS M-Data carrier
with round coil Ø ≥ 35 mm	with rod antenna	with round coil Ø ≤ 34 mm	with round coil Ø ≤ 34 mm
Docking Station and Pistol Grip	Docking Station and Pistol Grip	Docking Station and Pistol Grip	Docking Station and Pistol Grip

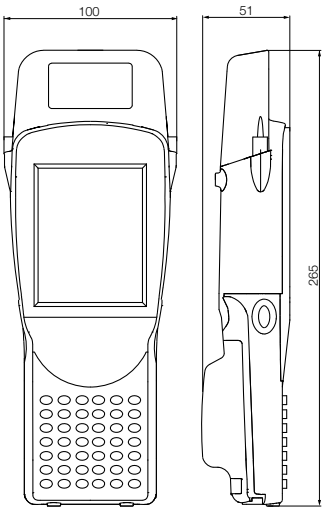

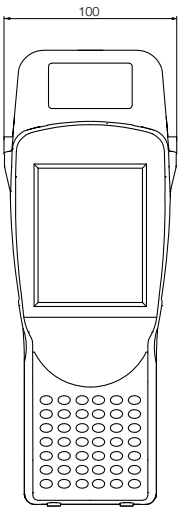

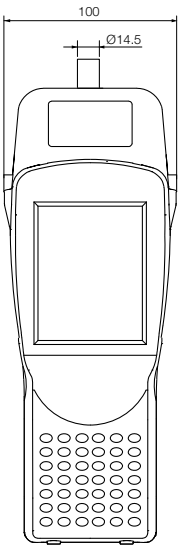

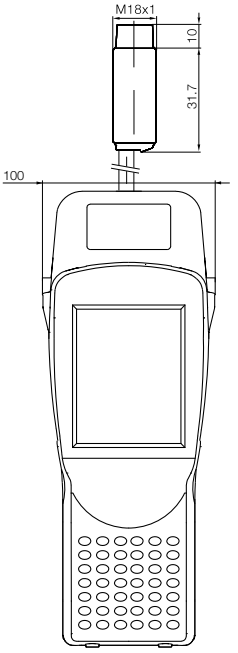

Range of Applications
Selection Criteria
Data carriers
Barrel
Read/write heads
Read/write heads with integrated processor
Block
Read/write heads
Read/write heads with integrated processor
Remote
Read/write heads
Read/write heads with integrated processor
Long range
Read/write heads
Read/write heads with integrated processor
Controller
Antenna
Processors
Gateways
Handheld
Accessories

Template Software Version

For enhanced operating convenience

Allows portable writing and reading of BIS M data carriers.
Easy operation thanks to:
- Touchscreen with large Windows CE® color display
- Pre-installed Balluff software and keyboard or stylus
- Additional pre-installed user-configurable template GUI software for customized user screens.

Ideal for mobile conditions and challenging environments. Data transfer via optional WLAN or wired USB. The handheld is also modular for expandability.

Additional options:
A pistol grip and desktop docking/charging station.

Template software program provides customizable data formatting and screens. See page 126 for details.

Antenna type		
Function		
Housing material		
Standard base	**Ordering code**	
	Part number	
Standard + WLAN module	**Ordering code**	
	Part number	
Standard + 1D code reader	**Ordering code**	
	Part number	
Standard + 2D code reader	**Ordering code**	
	Part number	
Standard + ID code reader + WLAN	**Ordering code**	
	Part number	
Standard +2D code reader + WLAN	**Ordering code**	
	Part number	
Keyboard		
Display		
Supply voltage		
Capacity		
Interface		
Working temperature		
Degree of protection in accordance with IEC 60529		
Read/write head option		
Accessories included		
Appropriate data carrier		
Please order additional accessories separately		

Antenna type:

rod

round

Handheld Standard **BIS M-87_-1-008-x-000_**
Includes charger and stylus

Recommended accessories
(please order separately)

Description	Pistol grip option	Optional docking station with power supply	Replacement battery 4000mAh rechargeable battery	Hand grip for ergonomic use For read/write heads or read/write heads with integrated processors
Part code	**FHW0004**	**FHW0003**	**WA3010**	**BAM012J**
Part number	11023836	11023834	162936	BIS Z-HG-002

BIS M Industrial RFID Systems

Standard handheld with software

General purpose	Rod	Tool ID	Tool ID remote head
Read/write	Read/write	Read/write	Read/write
ABS	ABS	ABS	ABS
BAE00HU	**BAE00K0**		**BAE00J3**
BIS M-870-1-008-X-000-3001	BIS M-871-1-008-X-000-3001	BIS M-873-1-008-X-000-3001	BIS M-874-1-008-X-000-3001
BIS M-870-1-008-X-001-3001	BIS M-871-1-008-X-001-3001	BIS M-873-1-008-X-001-3001	BIS M-874-1-008-X-001-3001
BIS M-870-1-008-X-002-3001	BIS M-871-1-008-X-002-3001	BIS M-873-1-008-X-002-3001	BIS M-874-1-008-X-002-3001
BIS M-870-1-008-X-003-3001	BIS M-871-1-008-X-003-3001	BIS M-873-1-008-X-003-3001	BIS M-874-1-008-X-003-3001
BIS M-870-1-008-X-004-3001	BIS M-871-1-008-X-004-3001	BIS M-873-1-008-X-004-3001	BIS M-874-1-008-X-004-3001
BIS M-870-1-008-X-005-3001	BIS M-871-1-008-X-005-3001	BIS M-873-1-008-X-005-3001	BIS M-874-1-008-X-005-3001
52 buttons, alphanumeric	52 buttons, alphanumeric	52 buttons, alphanumeric	52 buttons, alphanumeric
TFT Touchscreen display	TFT Touchscreen display	TFT Touchscreen display	TFT Touchscreen display
3.7 V rechargeable battery pack	3.7 V rechargeable battery pack	3.7 V rechargeable battery pack	3.7 V rechargeable battery pack
4000 mA/h	4000 mA/h	4000 mA/h	4000 mA/h
RS232/Balluff Dialog	RS232/Balluff Dialog	RS232/Balluff Dialog	RS232/Balluff Dialog
–10...+50 °C	–10...+50 °C	–10...+50 °C	–10...+50 °C
IP 65	IP 65	IP 65	IP 65
Integrated	Integrated	Integrated	Integrated
Charging power supply and stylus	Charging power supply and stylus	Charging power supply and stylus	Charging power supply and stylus
for BIS M-Data carrier	for BIS M-Data carrier	for BIS M-Data carrier	for BIS M-Data carrier
with round coil Ø ≥ 35 mm	with rod antenna	with round coil Ø ≤ 34 mm	with round coil Ø ≤ 34 mm
Docking Station and Pistol Grip	Docking Station and Pistol Grip	Docking Station and Pistol Grip	Docking Station and Pistol Grip

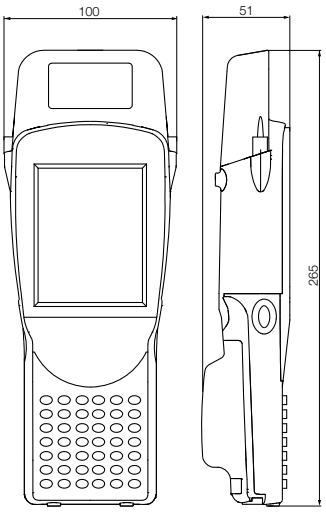

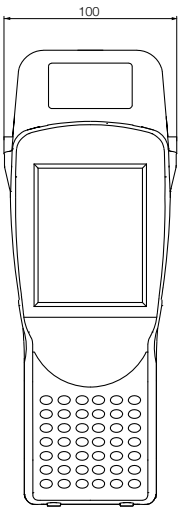

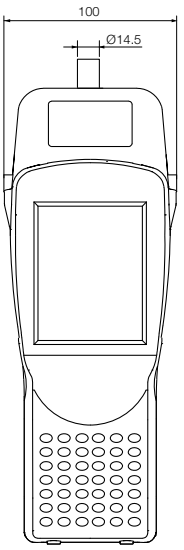

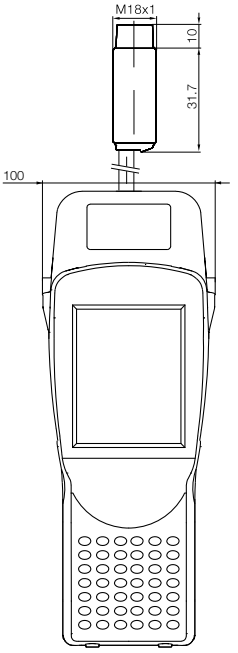

Range of Applications
Selection Criteria
Data carriers
Barrel
Read/write heads
Read/write heads with integrated processor
Block
Read/write heads
Read/write heads with integrated processor
Remote
Read/write heads
Read/write heads with integrated processor
Long range
Read/write heads
Read/write heads with integrated processor
Controller
Antenna
Processors
Gateways
Handheld
Accessories

BIS Portal Software Version

For enhanced operating convenience

Allows portable writing and reading of BIS M data carriers.
Easy operation thanks to:
- Touchscreen with large Windows CE® color display
- Pre-installed Balluff software and keyboard or stylus
- Additional pre-installed user-configurable BIS Portal advanced operation and GUI software for customized user screens and data handling options, including bar code reading integration.

Ideal for mobile conditions and challenging environments. Data transfer via optional WLAN or wired USB. The handheld is also modular for expandability.

Additional options:
A pistol grip and desktop docking/charging station.

BISPortal software program provides data formatting and screens, bar code reading and data queries. See page 126 for details.

Antenna type		
Function		
Housing material		
Standard base	**Ordering code**	
	Part number	
Standard + WLAN module	**Ordering code**	
	Part number	
Standard + 1D code reader	**Ordering code**	
	Part number	
Standard + 2D code reader	**Ordering code**	
	Part number	
Standard + ID code reader + WLAN	**Ordering code**	
	Part number	
Standard +2D code reader + WLAN	**Ordering code**	
	Part number	
Keyboard		
Display		
Supply voltage		
Capacity		
Interface		
Working temperature		
Degree of protection in accordance with IEC 60529		
Read/write head option		
Accessories included		
Appropriate data carrier		
Please order additional accessories separately		

Antenna type:

rod

round

Handheld Standard **BIS M-87_-1-008-x-000_**
Includes charger and stylus

Recommended accessories
(please order separately)

Description	Pistol grip option	Optional docking station with power supply	Replacement battery 4000mAh rechargeable battery	Hand grip for ergonomic use For read/write heads or read/write heads with integrated processors
Part code	**FHW0004**	**FHW0003**	**WA3010**	**BAM012J**
Part number	11023836	11023834	162936	BIS Z-HG-002

BIS M Industrial RFID Systems

Standard handheld with software

General purpose	Rod	Tool ID	Tool ID remote head
Read/write	Read/write	Read/write	Read/write
ABS	ABS	ABS	ABS
		BAE00HJ	**BAE00JO**
BIS M-870-1-008-X-000-3002	BIS M-871-1-008-X-000-3002	BIS M-873-1-008-X-000-3002	BIS M-874-1-008-X-000-3002
		BAE00J7	**BAE00JU**
BIS M-870-1-008-X-001-3002	BIS M-871-1-008-X-001-3002	BIS M-873-1-008-X-001-3002	BIS M-874-1-008-X-001-3002
BIS M-870-1-008-X-002-3002	BIS M-871-1-008-X-002-3002	BIS M-873-1-008-X-002-3002	BIS M-874-1-008-X-002-3002
BIS M-870-1-008-X-003-3002	BIS M-871-1-008-X-003-3002	BIS M-873-1-008-X-003-3002	BIS M-874-1-008-X-003-3002
BAE00JW			
BIS M-870-1-008-X-004-3002	BIS M-871-1-008-X-004-3002	BIS M-873-1-008-X-004-3002	BIS M-874-1-008-X-004-3002
BAE00HR			**BAE00HN**
BIS M-870-1-008-X-005-3002	BIS M-871-1-008-X-005-3002	BIS M-873-1-008-X-005-3002	BIS M-874-1-008-X-005-3002
52 buttons, alphanumeric	52 buttons, alphanumeric	52 buttons, alphanumeric	52 buttons, alphanumeric
TFT Touchscreen display	TFT Touchscreen display	TFT Touchscreen display	TFT Touchscreen display
3.7 V rechargeable battery pack	3.7 V rechargeable battery pack	3.7 V rechargeable battery pack	3.7 V rechargeable battery pack
4000 mA/h	4000 mA/h	4000 mA/h	4000 mA/h
RS232/Balluff Dialog	RS232/Balluff Dialog	RS232/Balluff Dialog	RS232/Balluff Dialog
–10...+50 °C	–10...+50 °C	–10...+50 °C	–10...+50 °C
IP 65	IP 65	IP 65	IP 65
Integrated	Integrated	Integrated	Integrated
Charging power supply and stylus	Charging power supply and stylus	Charging power supply and stylus	Charging power supply and stylus
for BIS M-Data carrier	for BIS M-Data carrier	for BIS M-Data carrier	for BIS M-Data carrier
with round coil Ø ≥ 35 mm	with rod antenna	with round coil Ø ≤ 34 mm	with round coil Ø ≤ 34 mm
Docking Station and Pistol Grip	Docking Station and Pistol Grip	Docking Station and Pistol Grip	Docking Station and Pistol Grip

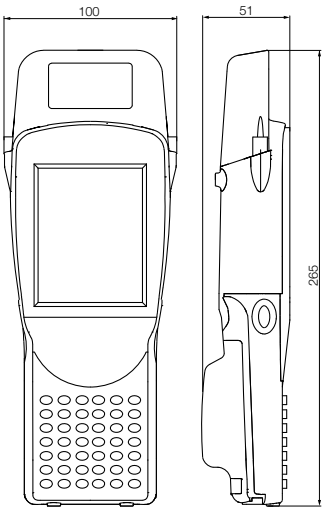

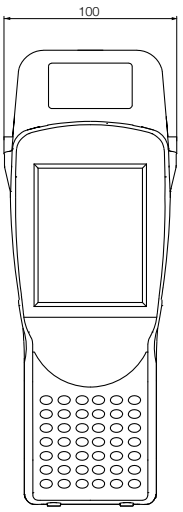

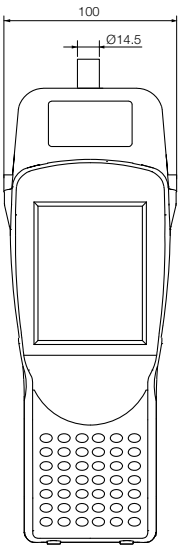

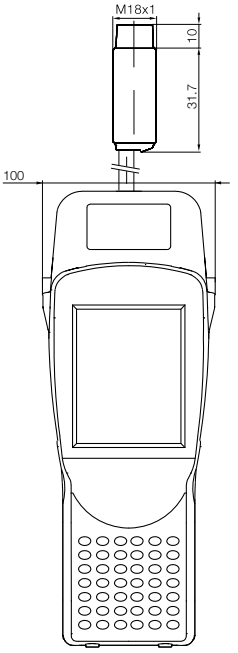

Range of Applications
Selection Criteria
Data carriers
Barrel
Read/write heads
Read/write heads with integrated processor
Block
Read/write heads
Read/write heads with integrated processor
Remote
Read/write heads
Read/write heads with integrated processor
Long range
Read/write heads
Read/write heads with integrated processor
Controller
Antenna
Processors
Gateways
Handheld
Accessories

Mobile ID Solutions Software

Data displayed the way you want it
When you require a way to see your critical RFID based data in a legible and logical manner using a mobile device, having a data display solution you can customize without a great deal of time, expense or programing expertise is the answer.

The BIS Template Software solution for Balluff's handhelds allows you to access the data on your RFID tags and display it the way you want it, maximizing access and increasing visibility to your process. It allows you to read and write data to the tag and store or transfer that data to and from the handheld using a simple to customize and easy to understand software interface.

The BISPortal software solution for Balluff's handhelds allows you to get data from your RFID tags and bar codes, then display and search it the way you want, maximizing access and increasing visibility to your process. It allows you to read data from a tag or bar code, write data to a tag, easily search the read data, compare data to a onboard user created database and store or transfer that data to and from the handheld using a simple to customize and easy to understand software interface.

Simple to customize
The Template software has a simple Windows™ PC based configuration interface that uses menu driven, pull-down selection options to configure and display your RFID tags data in a logical and application specific manner. You decide and configure customized descriptions and what format your data is shown in without the need for any programming.

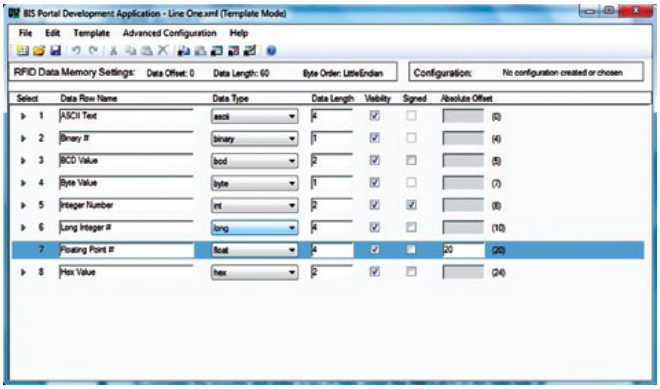

Windows™ PC template Development Application interface

Template driven
The BIS Portal Development Application uses a simple template configuration method to define the RFID and bar code data and setup the way in which that data will be displayed. Using a template format makes it a simple to understand configuration method, allowing you to create your own customized handheld data screens. No need to do your own programming or hire an integrator. This software also makes configuring and uploading your data to the handheld just as easy.

RFID data display types include:
- ASCII
- Binary
- BCD
- Byte
- Integer
- Long integer
- Floating point
- Hexadecimal

Template Software Solution

Benefits of BIS Template software

- Access your RFID data anywhere using a mobile handheld solution.
- Display RFID data the way you want to see it.
- No programming or integration required!

Customizable data display

- Data can be displayed using different data formats.
- Raw data can be grouped together and displayed using defined rows.
- User defined descriptions on each row for easy data identification.

Simple display configuration

- Configure a data "template" using the simple PC configuration interface program.
- Transfer the template to the handheld using the PC interface and USB connection.
- Use the automatically installed icon on the handheld's interface desktop to begin using the created template.

Balluff Tool ID compatibility

The Template software combined with our BIS Tool ID RFID hardware provides a powerful mobile solution to access Tool ID tag data anywhere on the shop floor with the greatest flexibility.

With the use of this software and a Tool ID RFID tag antenna on a handheld, Tool ID data can be accessed, customized and seen the way you need it. Provide unparalleled mobile access to the Tool data at the machine on the shop floor, tool crib, or anywhere in between.

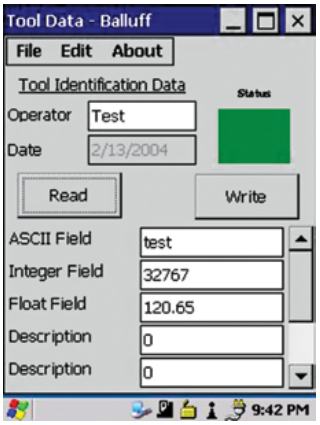

Handheld data display and interface

Portal Software Solution

Benefits of BISPortal software

- Access your RFID and bar code data anywhere using a mobile handheld solution.
- Display and query RFID and bar code data the way you want.
- No programming or integration required!

Customizable data display

- Data can be displayed using different data formats.
- Raw data can be grouped together and displayed using defined rows.
- User defined descriptions on each row make it easy for data identification.

Simple display configuration

- Configure a data "template" using the simple PC configuration interface program.
- Create multiple templates for different applications.
- Easily transfer templates and databases to the handheld using the PC interface and USB connection.

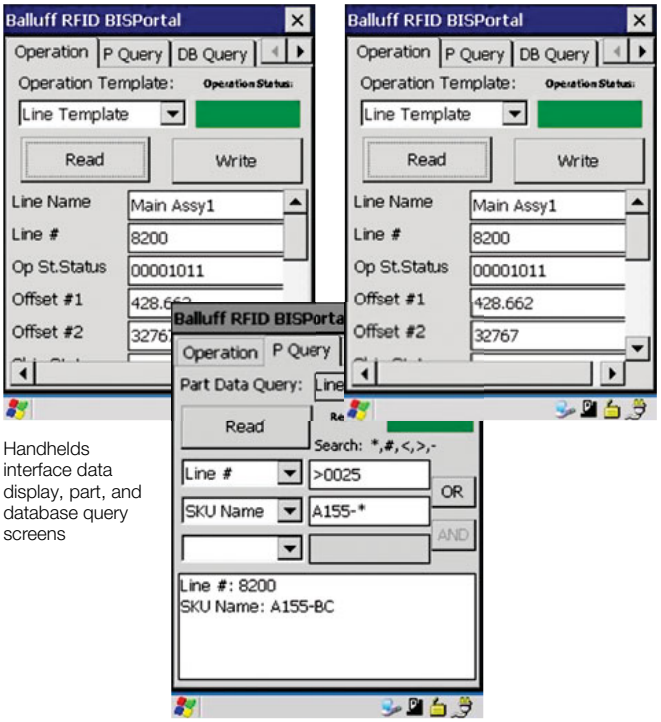

Handhelds interface data display, part, and database query screens

Range of Applications
Selection Criteria
Data carriers
Barrel
Read/write heads
Read/write heads with integrated processor
Block
Read/write heads
Read/write heads with integrated processor
Remote
Read/write heads
Read/write heads with integrated processor
Long range
Read/write heads
Read/write heads with integrated processor
Controller
Antenna
Processors
Gateways
Handheld
Accessories

Access protection

And here's how it works

Individual access codes are allocated via programmable data keys, which can then be disabled to prevent further programming.

Unauthorized personnel cannot manipulate the data key as a result. The data key is read via an antenna fitted to a special bracket. The processor unit then issues the data.

Different interfaces such as serial, PROFIBUS, DeviceNet™, Ethernet/IP or parallel interfaces enable simple connection to the monitored system. Available for systems BIS C, BIS L and BIS M.

The benefits

The programmable data key allows upgrades or replacements without requiring modifications to the system software.

End users are independent of system providers. The access system is easy to integrate in read/write stations that already use an identification system.

Simply connect the access monitoring antenna to the second channel on the existing processor unit. Hardware expenses are reduced to a minimum and software only requires slight modification in order to process both channels.

Version	
Use	
Ordering code	
Part number	
Operating temperature	
Storage temperature	
Protection per IEC 60529	

Electronic key for access control. Easy to implement using the "RFID key"

Mechanical accessories

Access protection	Data carrier + Bracket
Attachment for read/write head	Used with BIS Z-ZA-001
BIS M-304	
BAM012N	**BIS0049**
BIS Z-ZA-001	BIS M-122-01/A-ZC1
0...+70 °C	–25...+70 °C
–20...+85 °C	–25...+85 °C
	IP 67

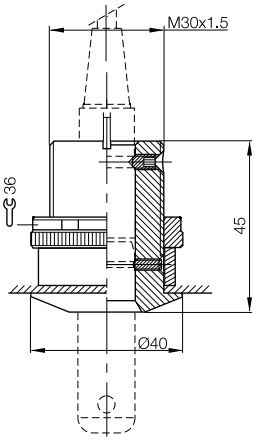

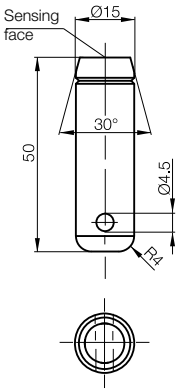

Range of Applications
Selection Criteria
Data carriers
Barrel
Read/write heads
Read/write heads with integrated processor
Block
Read/write heads
Read/write heads with integrated processor
Remote
Read/write heads
Read/write heads with integrated processor
Long range
Read/write heads
Read/write heads with integrated processor
Controller
Antenna
Processors
Gateways
Handheld
Accessories

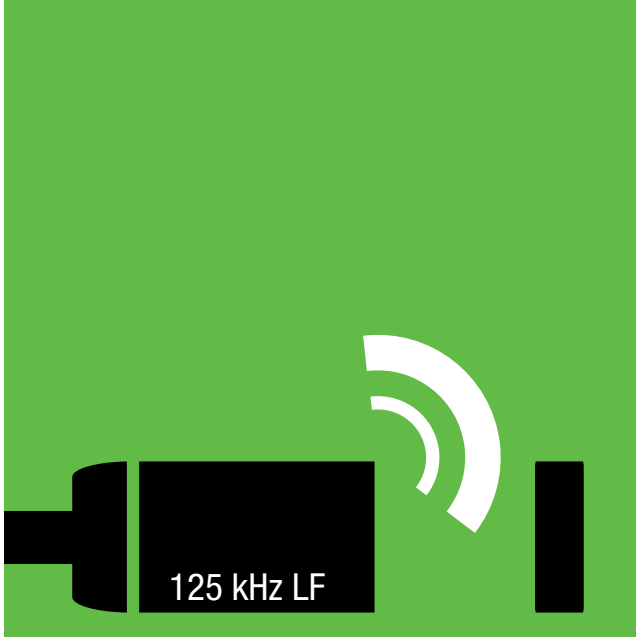

BIS L Industrial RFID System

Inductive Identification

The BIS L system uses a Low Frequency or LF 125KHz inductively coupled technology along with passive tags to provide shorter range RFID solutions up to 100mm for WIP (work in process) or production control such as palletized production and quality traceability applications. The BIS L system is also used for lower cost read-only tracking applications when only an identifier is required. This system can be used on or off metal and provides hardened re-usable tagging options.

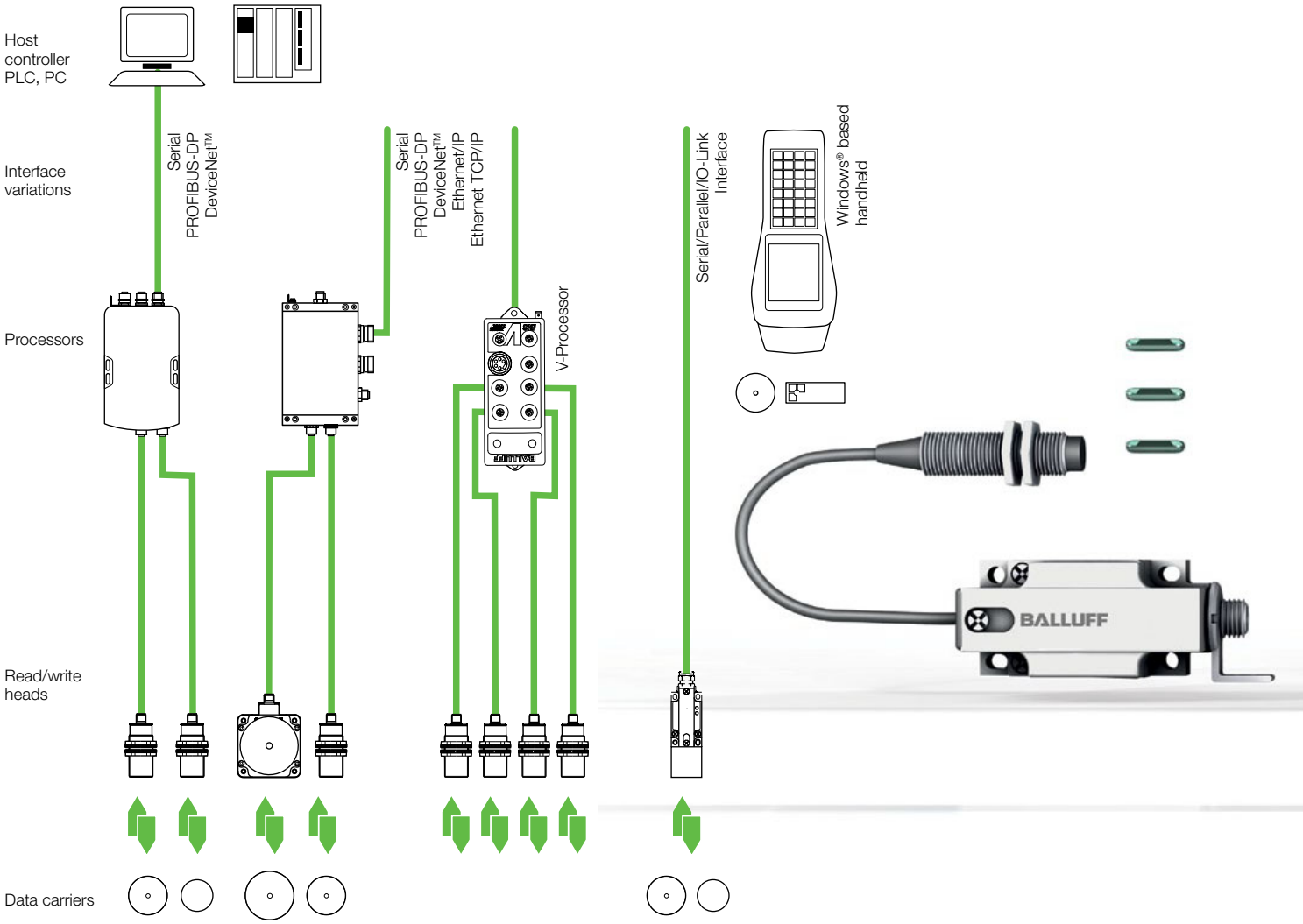

BIS L Industrial RFID System
Inductive identification

Range of applications	132
Selection criteria for read/write distances	134
Data carriers read/write	138
Data carriers read only	140
Read/write heads	142
Data couplers	154
Read/write heads with integrated processors – Parallel	156
Read/write heads with integrated processors – Serial	158
Read/write heads with integrated processors – IO-Link	160
Read/write heads with integrated processors – easy loop®	162
Processors – Serial	164
Processors – PROFIBUS-DP	166
Processors – DeviceNet™	168
Processors – EtherNet/IP™	170
Processors – EtherNet TCP/IP	171
Processors – BIS V	172
Communication module for easy loop®	174
Handheld	176
Mechanical accessories	178

125 kHz LF

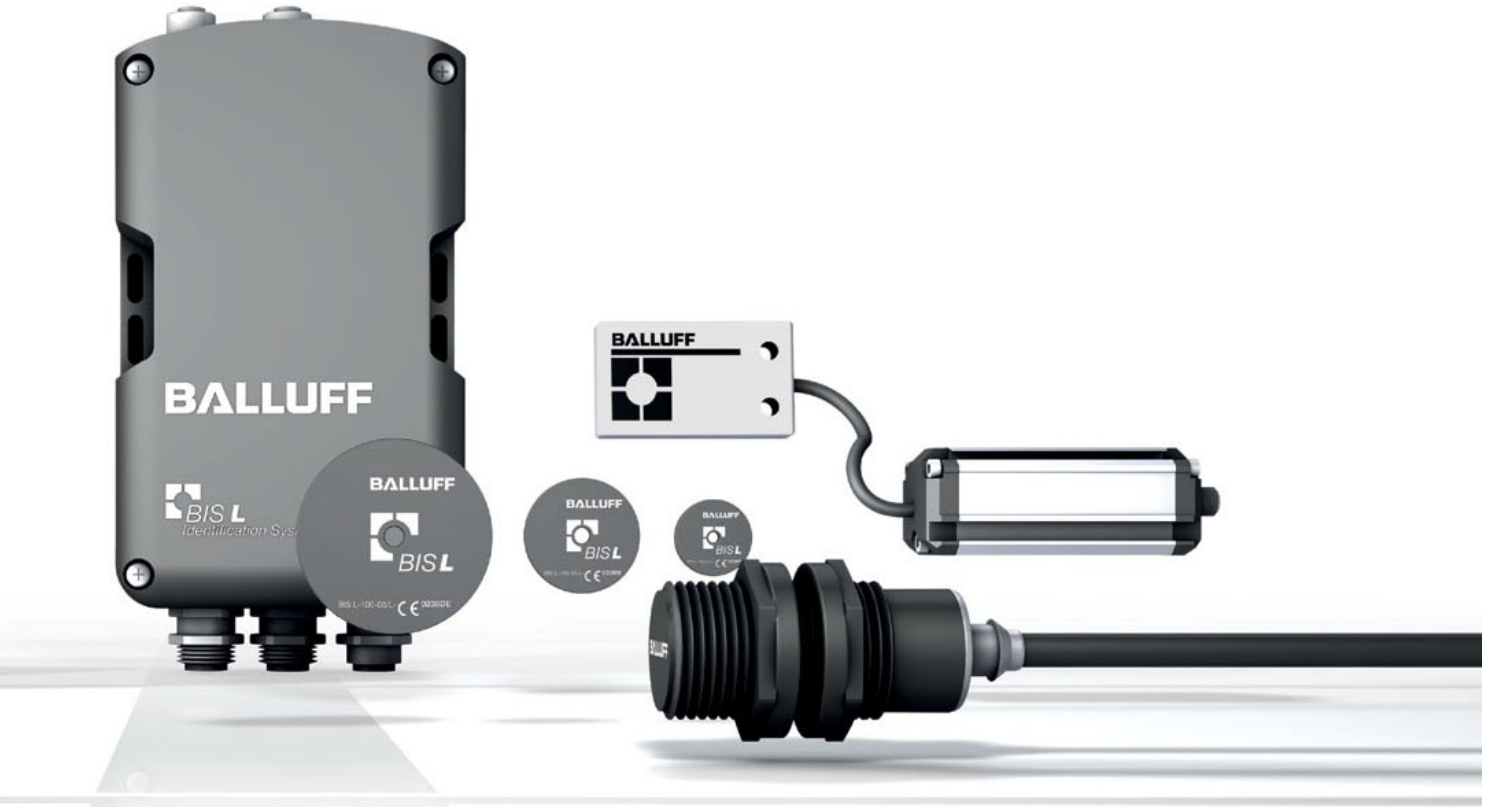

Technical information and definitions can be found on **page 354**

BIS L Industrial RFID System

Wide range of applications, many different variants

Select the most suitable BIS L system for your application from the table and benefit from the outstanding performance and quality of economical industrial RFID systems.

How much data do you require?
How dynamic is your application?

In three steps you will have selected your BIS L system:

1. First choose the appropriate form factor for your data carrier and the associated read/write heads.
2. Then determine your read/write distance, which also depends on the speed of your system: the faster the data carrier moves, the closer the distance needs to be.
3. Finally, determine the desired memory capacity. This will give you the maximum data security.

Questions?
Whatever your need, whether analysis, selection and return on investment, formats, interfaces and software, installation, disassembly and retrofitting – we are here to help you in every way.

Contact ust to take advantage of our personal consultation, individual support and worldwide service.

Data carrier		Page
BIS0033	BIS L-100-01/L	138
BIS0035	BIS L-100-05/L-RO	141
BIS0036	BIS L-101-01/L	139
BIS0038	BIS L-101-05/L-RO	141
BIS0039	BIS L-102-01/L	139
BIS003C	BIS L-102-05/L-RO	141
BIS003E	BIS L-103-05/L	139
BIS003F	BIS L-103-05/L-RO	141
BIS00ZY	BIS L-103-05/L-ZC1	179
BIS003N	BIS L-150-05/A	139
BIS003R	BIS L-200-03/L	141
BIS003T	BIS L-201-03/L	141
BIS003U	BIS L-202-03/L	141
BIS003W	BIS L-203-03/L	141

BIS L Industrial RFID System
Typical application

	Production			Intralogistics						Access and object control										
	Tool and die management		Assembly conveying systems	Closed logistics circuits		Storage and retrieval equipment		Driverless vehicles		Object detection		Access and entry control						Read/write EEPROM	Read only	
	On tool	Dies	Pallets	Retainer/workpiece carrier	Pallets	Retainer/workpiece carrier	Workpiece carrier skid	Guiding, steering	Identification	In component	On component	Reliable access control	Process access	Part ID	Read/write	Installation in metal	Long distances (> 16 mm)	192 Byte	3 Byte + CRC	5 Byte
			■	■	■										■			■		
			■	■	■				■										■	
			■		■	■		■							■		■	■		
			■		■	■			■								■		■	
			■	■		■	■								■		■	■		
			■	■		■	■		■								■		■	
	■	■									■	■	■		■			■		
	■	■							■										■	
												■	■		■			■		
	■	■								■				■	■	■		■		
			■		■	■			■								■			■
			■		■	■			■								■			■
			■	■		■	■										■			■
		■		■					■					■						■

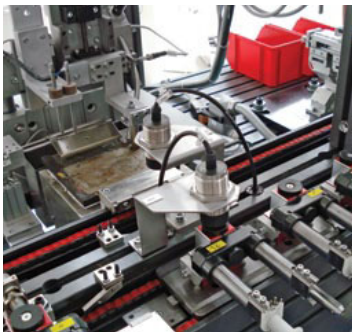

BIS L Industrial RFID System

Selection criteria for read/write distances

How much data do you require?
How dynamic is your application?

In three steps you will have selected your BIS L system:

- First choose the appropriate form factor for your data carrier and the associated read/write heads.
- Then determine your read/write distance, which also depends on the speed of your system: the faster the data carrier moves, the closer the distance needs to be.
- Finally, determine the desired memory capacity. This will give you the maximum data security.

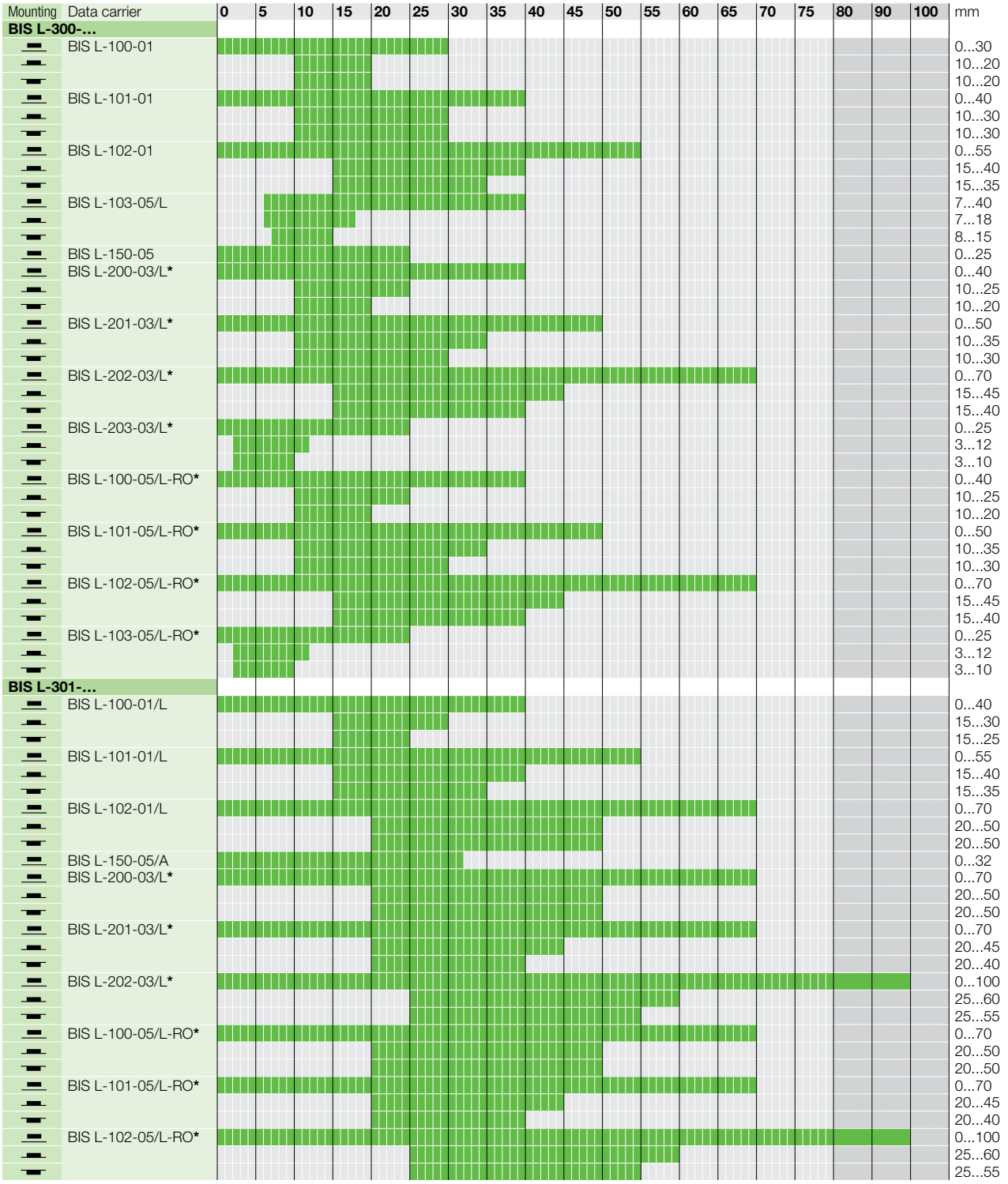

BIS L Industrial RFID System

Selection criteria for read/write distances

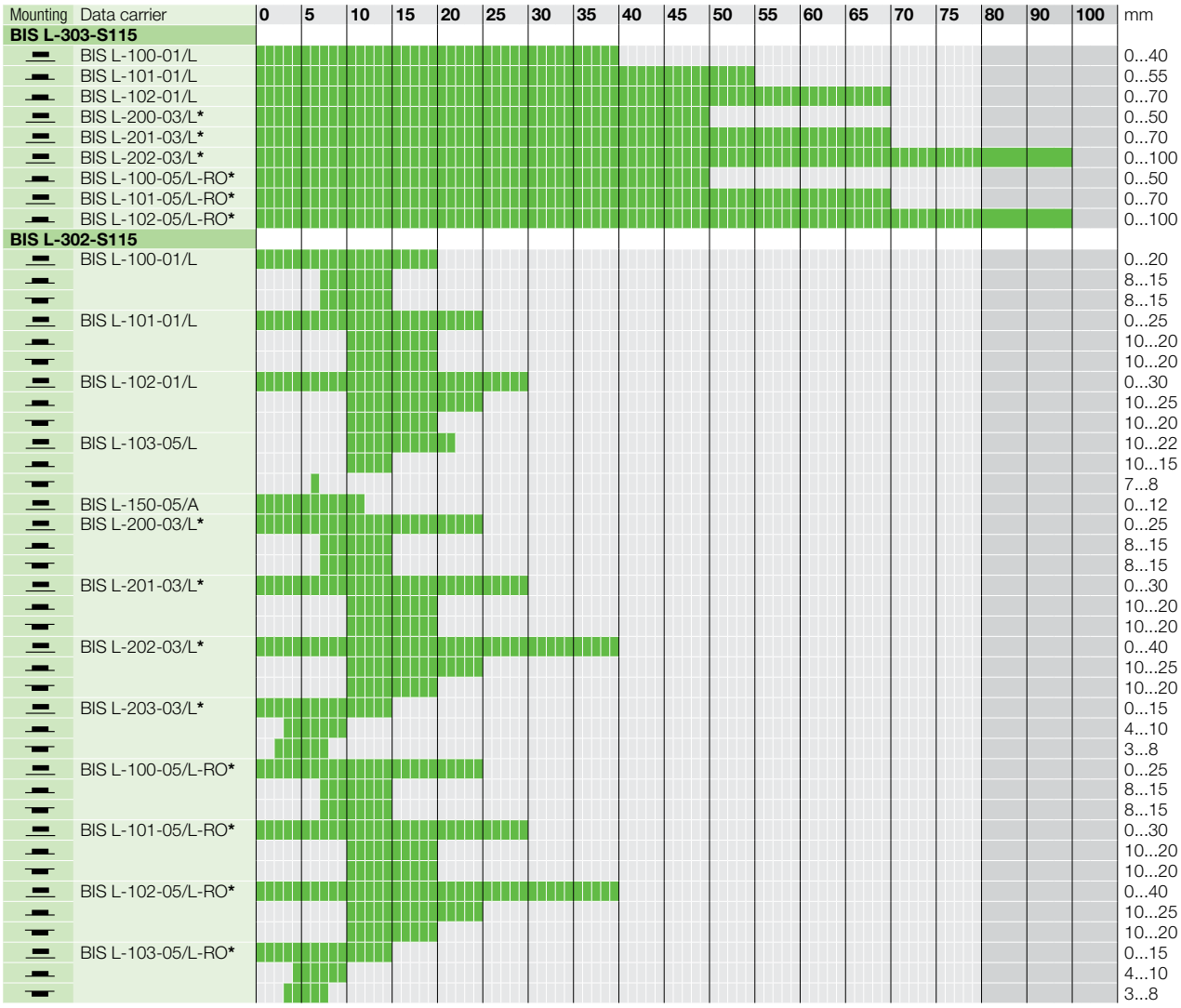

BIS L Industrial RFID System

Selection criteria for read/write distances

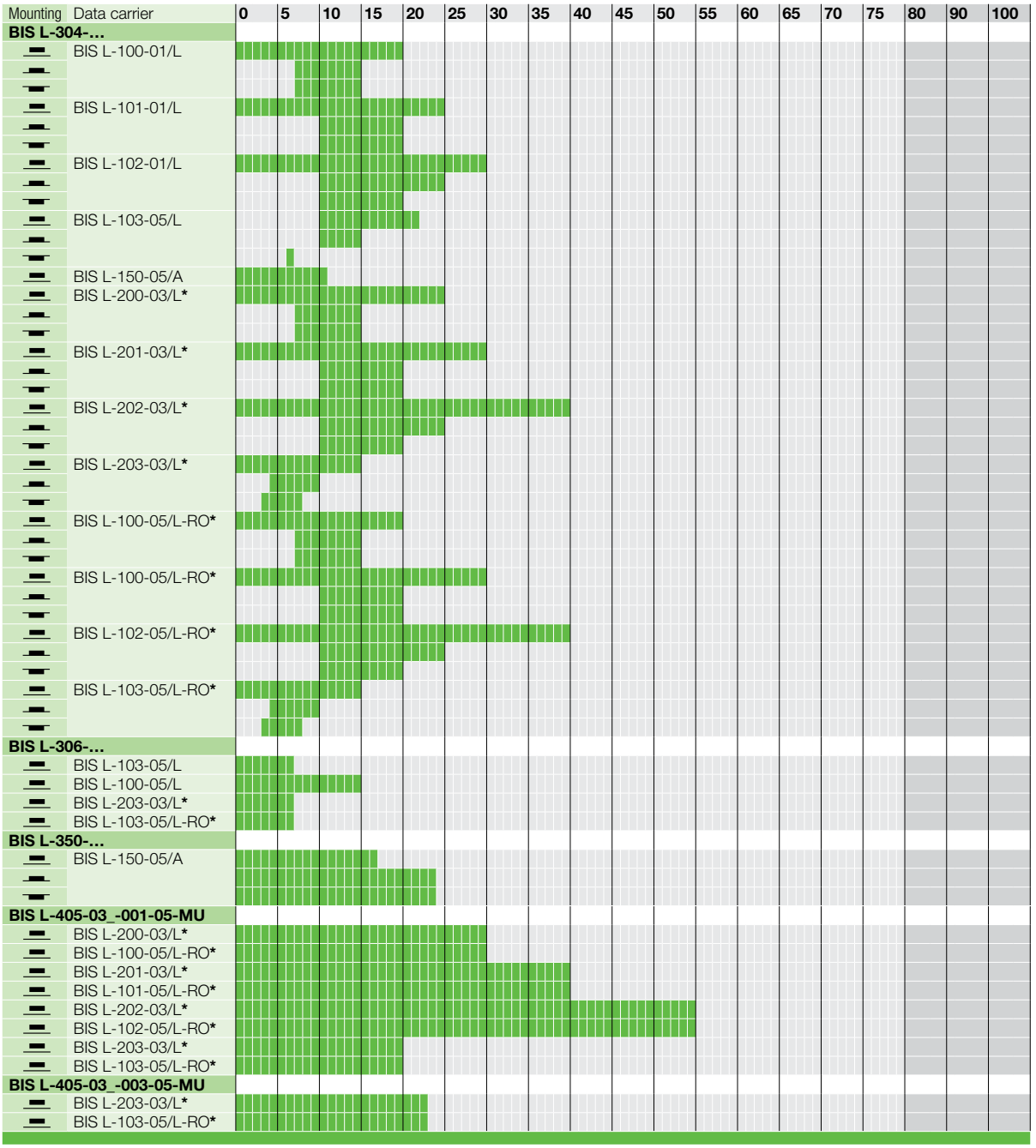

BIS L Industrial RFID System

Selection criteria for read/write distances

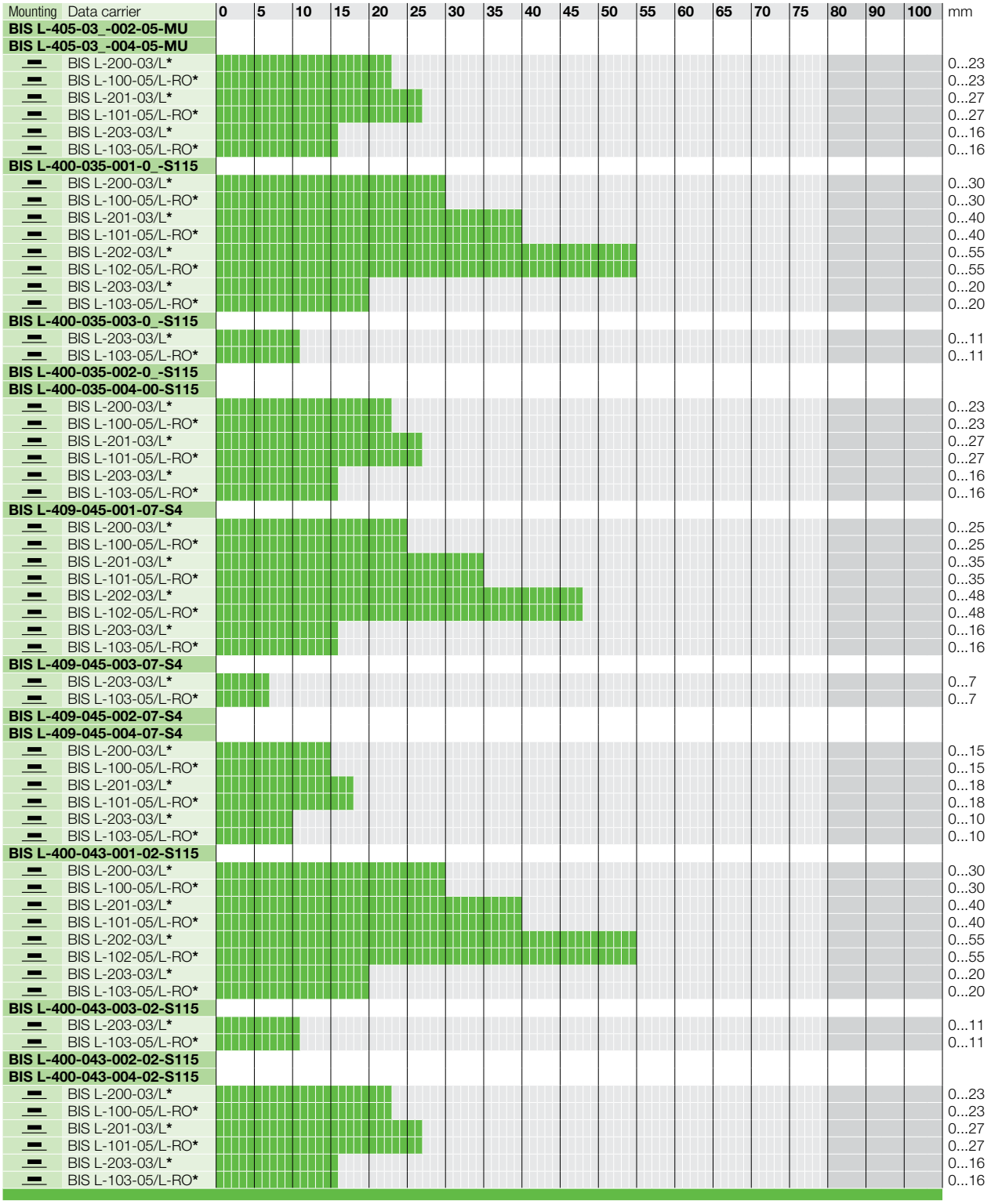

For harsh environments
Housing material extremely resistant to chemicals

Compact designs for special applications

Dimensions		**Ø 20×1.6**
Housing material		EP

BIS L Programmable

192 bytes	**Ordering code**	**BIS0033**
	Part number	BIS L-100-01/L
Operating temperature		–25...+85 °C
Storage temperature		–40...+95 °C
Protection per IEC 60529		IP 67

Appropriate read/write head with max. read/write distance

Mounting			
BIS L-300	30 mm	20 mm	20 mm
BIS L-301	40 mm	30 mm	25 mm
BIS L-302	20 mm	15 mm	15 mm
BIS L-303	50 mm	14 mm	
BIS L-304	20 mm	15 mm	15 mm
BIS L-306	15 mm		
BIS L-350			

For installation see technical section.

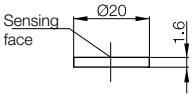

Mounting (see technical section for details):

flush in steel

non-flush on steel

non-metal

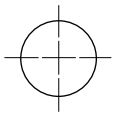

Antenna type:

rod

round

Data carriers read/write

	Ø 30×1.6			**Ø 50×1.6**			**Ø 12.4×2**			**Ø 3.15×13.3**		
	EP			EP			EP			Glass		
	BIS0036			**BIS0039**			**BIS003E**			**BIS003N**		
	BIS L-101-01/L			BIS L-102-01/L			BIS L-103-05/L			BIS L-150-05/A		
	–25...+85 °C			–25...+85 °C			–25...+85 °C			–40...+85 °C		
	–40...+95 °C			–40...+95 °C			–40...+130 °C			–40...+90 °C		
	IP 67			IP 67			IP 68			IP 68		
	40 mm	30 mm	30 mm	55 mm	40 mm	35 mm	10 mm	18 mm	12 mm	25 mm		
	55 mm	40 mm	35 mm	70 mm	50 mm	50 mm				32 mm		
	25 mm	20 mm	20 mm	30 mm	25 mm	20 mm	22 mm	15 mm	8 mm	12 mm		
	65 mm	25 mm	15 mm	85 mm	30 mm	25 mm						
	25 mm	20 mm	20 mm	30 mm	25 mm	20 mm	22 mm	15 mm	8 mm	12 mm		
							7 mm					
										17 mm	24 mm	24 mm

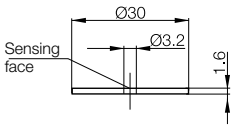

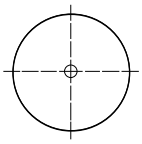

Tightening torque max. 1 Nm

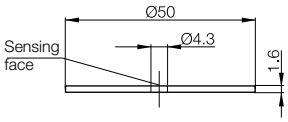

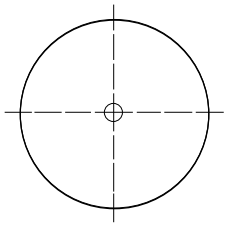

Tightening torque max. 1 Nm

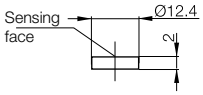

For metal

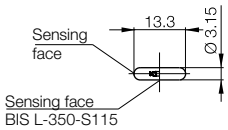

Glass data carrier – chemically resistant!

Order coding: BIS003L
Part number: BIS L-130-05/L-SA1
for radial data retrieval from rotating parts, positioning not required.
Contact us.

For maximum data security

The CRC_16 procedure involves writing a test code to the data carrier to allow you to control data anywhere at any time. The benefit to you: high level of data security even in non-active phase (data carrier outside of R/W head)

The procedure is only possible with data carriers of type BIS L-1_ _-05/L, which are converted into read-only format.

BIS L-1_ _-05/L-RO are read-only data carriers that can be programmed according to your requirements. Please ask for the order form or download it from our website. 3 bytes of user data as well as 2 bytes for the CRC are stored. Data consistency is queried by the processor.

The BIS L-2_ _-03/L uses read-only data carriers with a fixed "unique number" of 5 bytes (40 bits). No repetition of the unique number or delivery of sequential numbers is possible.

Read-only data carriers:
preprogram your individual data and benefit from maximum data security

Dimensions		
Housing material		

BIS L Read-only

24 bits + CRC	**Ordering code**	
	Part number	
40 bits	**Ordering code**	
	Part number	
Operating temperature		
Storage temperature		
Protection per IEC 60529		

Appropriate read/write head with max. read/write distance

Mounting	
BIS L-300	
BIS L-301	
BIS L-302	
BIS L-303	
BIS L-304	
BIS L-306	

For installation see technical section.

Mounting (see technical section for details):

flush in steel

non-flush on steel

non-metal

Antenna type:

rod

round

Mazak™ Machine Tool ID
These read-only machine tool tags are specifically designed to work for Mazak tool ID systems. They come premounted in the retention knobs and are available in either Cat 40 or Cat 50 sizes. These tool tags are 100% compatible to existing Mazak systems.

Cat 50

Order code: BIS00KK
Part number: BIS L-245-03/L

Cat 40

Order code: BIS00KJ
Part number: BIS L-244-03/L

Use a **BIS-L-400-047-010-20-S115** processor and **BIS L-306-PU1-05-S49/A** head preprogrammed with the Mazak communication protocol for 100% compatibility to existing Mazak tool ID systems. **BKS-S115-SA4-PU-01** power/communication cable is also available for easy connectivity.

Data carriers read only

	Ø 20×1.6			**Ø 30×1.6**			**Ø 50×1.6**			**Ø 12.4×2**		
	EP			EP			EP			EP		
	BIS0035			**BIS0038**			**BIS003C**			**BIS003F**		
	BIS L-100-05/L-RO			BIS L-101-05/L-RO			BIS L-102-05/L-RO			BIS L-103-05/L-RO		
	BIS003R			**BIS003T**			**BIS003U**			**BIS003W**		
	BIS L-200-03/L			BIS L-201-03/L			BIS L-202-03/L			BIS L-203-03/L		
	-40...+85 °C			-40...+85 °C			-40...+85 °C			-25...+85 °C		
	-40...+95 °C			-40...+95 °C			-40...+95 °C			-40...+130 °C		
	IP 67*			IP 67*			IP 67*			IP 68		
	40 mm	25 mm	20 mm	50 mm	35 mm	30 mm	70 mm	45 mm	40 mm	25 mm		10 mm
	50 mm	35 mm	30 mm	70 mm	45 mm	40 mm	100 mm	60 mm	55 mm			
	25 mm	15 mm	15 mm	30 mm	20 mm	20 mm	40 mm	25 mm	20 mm	15 mm		8 mm
	55 mm			70 mm	30 mm	15 mm	100 mm	45 mm	40 mm			
	25 mm	15 mm	15 mm	30 mm	20 mm	20 mm	40 mm	25 mm	20 mm	15 mm		8 mm
										7 mm		

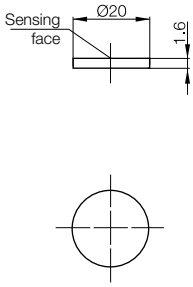

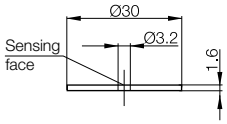

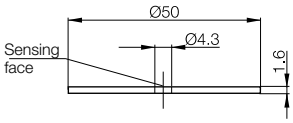

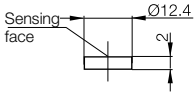

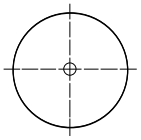

Tightening torque max. 1 Nm

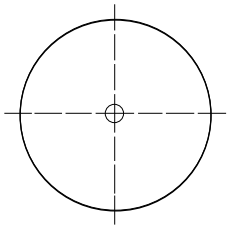

Tightening torque max. 1 Nm

Read/write heads

Dimensions		**M30**
Housing material		PA66
For standard processor	**Ordering code**	**BIS004R**
	Part number	BIS L-300-S115
For BIS V processor	**Ordering code**	**BIS00UL**
New Generation*	Part number	BIS VL-300-001-S4
Mounting		
Operating temperature		0...+70 °C (minus temperatures on request)
Storage temperature		–20...+85 °C
Protection per IEC 60529		IP 67
Connection to		Processor
Connection cable		See Connectivity section for cable options

Appropriate data carrier		**BIS0033**			**BIS0036**			**BIS0039**		
		BIS L-100-01			BIS L-101-01			BIS L-102-01		
Mounting										
Write distance in mm		0-30	10-20	10-20	0-40	10-30	10-30	0-55	15-40	15-35
Read distance in mm		0-30	10-20	10-20	0-40	10-30	10-30	0-55	15-40	15-35
Offset in mm at distance	0 mm	±18			±28			±30		
	3 mm	±18			±28			±30		
	8 mm	±18			±28			±30		
	10 mm	±18	±8	±8	±28	±15	±13	±30		
	12 mm	±18	±8	±8	±28	±15	±13	±30		
	15 mm	±18	±5	±5	±28	±15	±10	±30	±20	±20
	20 mm	±18	±0	±0	±28	±15	±10	±30	±20	±15
	25 mm	±18			±28	±10	±5	±30	±15	±15
	30 mm	±18			±28	±0	±0	±30	±15	±10
	35 mm				±28			±30	±15	±0
	40 mm				±28			±30	±0	
	45 mm							±30		
	50 mm							±30		
	55 mm									
	60 mm									
	70 mm									

For installation see technical section.

*See page 172.

Mounting (see technical section for details):

flush in steel

non-flush on steel

non-metal

Antenna type:

rod

round

BIS003E			**BIS003N**			**BIS003R**			**BIS003T**			**BIS003U**			**BIS003W**		
BIS L-103-05/L			BIS L-150-05			BIS L-200-03/L			BIS L-201-03/L			BIS L-202-03/L			BIS L-203-03/L		
						BIS0035			**BIS0038**			**BIS003C**			**BIS003F**		
						BIS L-100-05/L-RO			BIS L-101-05/L-RO			BIS L-102-05/L-RO			BIS L-103-05/L-RO		
7-40	7-18	8-15	0-25														
7-40	7-18	8-15	0-25			0-40	10-25	10-20	0-50	10-35	10-30	0-70	15-45	15-40	0-25	3-12	3-10
			±18			±20			±28			±35			±15		
			±18			±20			±28			±35			±15	±12	±9
±15	±10	±5	±18			±20			±28			±35			±15	±12	±8
±15	±10	±5	±18			±20	±15	±10	±28	±20	±17	±35			±15	±9	±7
±15	±10	±5	±17			±20	±15	±10	±28	±20	±17	±35			±15		
±15	±10	±3	±17			±20	±10	±10	±28	±20	±17	±35	±25	±20	±15		
±15			±17			±20	±10	±0	±28	±20	±17	±35	±25	±20	±15		
±15			±14			±20	±0		±28	±20	±15	±35	±20	±20	±13		
±15						±20			±28	±15	±0	±35	±20	±20			
±5						±20			±28	±0		±35	±15	±15			
						±20			±28			±35	±12	±0			
									±28			±35	±0				
									±28			±35					
												±35					
												±35					
												±35					

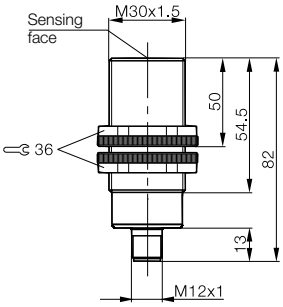

Example:

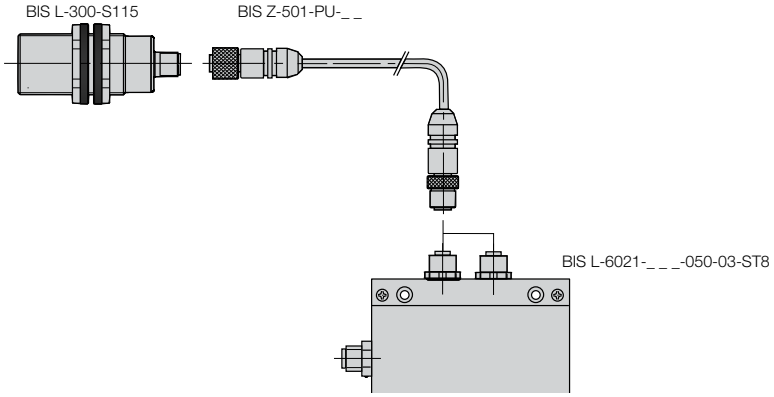

Dimensions		
Housing material		
For standard processor	**Ordering code**	
	Part number	
For BIS V processor	**Ordering code**	
New Generation*	Part number	
Mounting		
Operating temperature		
Storage temperature		
Protection per IEC 60529		
Connection to		
Connection cable		

Appropriate data carrier

Mounting		
Write distance in mm		
Read distance in mm		
Offset in mm at distance	0 mm	
	3 mm	
	8 mm	
	10 mm	
	15 mm	
	20 mm	
	25 mm	
	30 mm	
	35 mm	
	40 mm	
	45 mm	
	50 mm	
	55 mm	
	60 mm	
	70 mm	
	100 mm	

For installation see technical section.

*See page 172.

Connector orientation

Mounting (see technical section for details):

flush in steel

non-flush on steel

non-metal

Antenna type:

rod

round

	80×80×40 mm
	PBT
	BIS004T
	BIS L-301-S115
	BIS00U6
	BIS VL-301-001-S4
	0...+70 °C (minus temperatures on request)
	–20...+85 °C
	IP 67
	Processor
	See Connectivity section for cable options

BIS0033			**BIS0036**			**BIS0039**			**BIS003N**			**BIS003R**			**BIS003T**			**BIS003U**		
BIS L-100-01/L			BIS L-101-01/L			BIS L-102-01/L			BIS L-150-05/A			BIS L-200-03/L			BIS L-201-03/L			BIS L-202-03/L		
												BIS0035			**BIS0038**			**BIS003C**		
												BIS L-100-05/L-R0			BIS L-101-05/L-R0			BIS L-102-05/L-R0		
0-40	15-30	15-25	0-55	15-40	15-35	0-70	20-50	20-50	0-32											
0-40	15-30	15-25	0-55	15-40	15-35	0-70	20-50	20-50	0-32			0-70	20-50	20-50	0-70	20-45	20-40	0-100	25-60	25-55
±30			±35			±40			±24			±40			±40			±45		
±30			±35			±40			±24			±40			±40			±45		
±30			±35			±40			±24			±40			±40			±45		
±30			±35			±40			±24			±40			±40			±45		
±30	±20	±15	±35	±20	±20	±40			±24			±40			±40			±45		
±30	±15	±10	±35	±20	±20	±40	±25	±22	±24			±40	±25	±22	±40	±24	±20	±45		
±30	±10	±0	±35	±20	±15	±40	±25	±22	±24			±40	±25	±22	±40	±24	±20	±45	±30	±30
±30	±0		±35	±20	±15	±40	±25	±22	±24			±40	±25	±22	±40	±20	±20	±45	±30	±30
±30			±35	±15	±0	±40	±20	±15				±40	±20	±15	±40	±20	±15	±45	±30	±25
±30			±35	±0		±40	±15	±15				±40	±15	±15	±40	±18	±0	±45	±30	±25
			±35			±40	±15	±10				±40	±15	±10	±40	±0		±45	±25	±20
			±35			±40	±0	±0				±40	±0	±0	±40			±45	±20	±20
			±35			±40						±40			±40			±45	±10	±0
						±40						±40			±40			±45	±0	
						±40						±40			±40			±45		
																		±45		

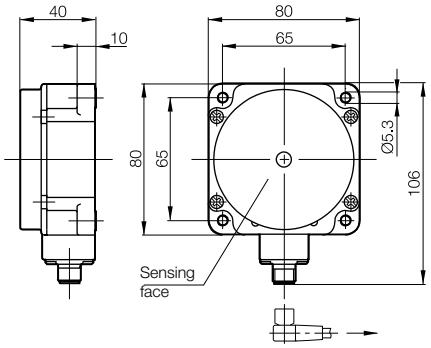

Suitable for roller conveyors/internal company logistics

Dimensions		
Housing material		
For standard processor	**Ordering code**	
	Part number	
Mounting		
Operating temperature		
Storage temperature		
Protection per IEC 60529		
Connection to		
Connection cable		

Appropriate data carrier

Mounting		
Write distance in mm		
Read distance in mm		
Offset in mm at distance	0 mm	
	3 mm	
	8 mm	
	10 mm	
	15 mm	
	20 mm	
	25 mm	
	30 mm	
	35 mm	
	40 mm	
	45 mm	
	50 mm	
	55 mm	
	60 mm	
	70 mm	
	100 mm	

For installation see technical section.

Mounting (see technical section for details):

flush in steel

non-flush on steel

non-metal

Antenna type:

rod

round

Read/write heads

	170×80×50 mm
	PBT
	BIS004Y
	BIS L-303-S115
	0...+70 °C (minus temperatures on request)
	–20...+85 °C
	IP 67
	Processor
	See Connectivity section for cable options

BIS0033	**BIS0036**	**BIS0039**	**BIS003R**	**BIS003T**	**BIS003U**
BIS L-100-01/L	BIS L-101-01/L	BIS L-102-01/L	BIS L-200-03/L	BIS L-201-03/L	BIS L-202-03/L
			BIS0035	**BIS0038**	**BIS003C**
			BIS L-100-05/L-R0	BIS L-101-05/L-R0	BIS L-102-05/L-R0
0-40	0-55	0-70			
0-40	0-55	0-70	0-50	0-70	0-100
±30	±35	±40	±35	±40	±45
±30	±35	±40	±35	±40	±45
±30	±35	±40	±35	±40	±45
±30	±35	±40	±35	±40	±45
±30	±35	±40	±35	±40	±45
±30	±35	±40	±35	±40	±45
±30	±35	±40	±35	±40	±45
±30	±35	±40	±35	±40	±45
±30	±35	±40	±35	±40	±45
±30	±35	±40	±35	±40	±45
±30	±35	±40	±35	±40	±45
	±35	±40	±35	±40	±45
	±35	±40	±35	±40	±45
	±35	±40		±40	±45
		±40		±40	±45
		±40		±40	±45
					±45

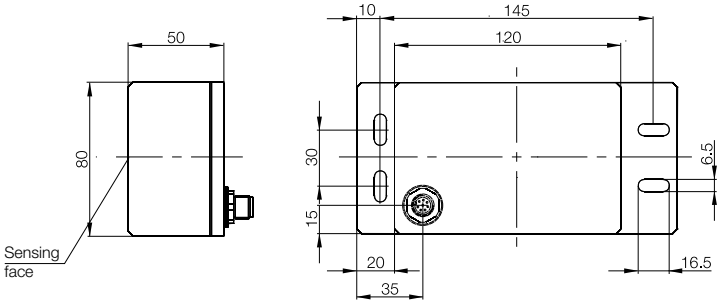

Compact Antenna Style BIS V New Generation

Use small read heads with processor electronics if the available width is limited

Dimensions		**M18**
Housing material		CuZn
For standard processor	**Ordering code**	**BIS004U**
	Part number	BIS L-302-S115
For BIS V processor	**Ordering code**	**BIS00UF**
New Generation*	Part number	BIS VL-302-001-S4
Mounting		
Operating temperature		0...+70 °C (minus temperatures on request)
Storage temperature		–20...+85 °C
Protection per IEC 60529		IP 67
Connection to		Processor
Connection cable		See Connectivity section for cable options

Appropriate data carrier

		BIS0033			**BIS0036**			**BIS0039**		
		BIS L-100-01/L			BIS L-101-01/L			BIS L-102-01/L		
Mounting										
Write distance in mm		0-20	8-15	8-15	0-25	10-20	10-20	0-30	10-25	10-20
Read distance in mm		0-20	8-15	8-15	0-25	10-20	10-20	0-30	10-25	10-20
Offset in mm at distance	0 mm	±10			±12			±15		
	3 mm	±10			±12			±15		
	4 mm	±10			±12			±15		
	7 mm	±10			±12			±15		
	8 mm	±10	±6	±6	±12			±15		
	10 mm	±10	±5	±5	±12	±10	±8	±15	±15	±10
	12 mm	±10	±4	±4	±12	±10	±8	±15	±15	±10
	15 mm	±10	±0	±0	±12	±5	±5	±15	±15	±5
	20 mm	±10			±12	±0	±0	±15	±10	±0
	25 mm				±12			±15	±0	
	30 mm							±15		
	35 mm									
	40 mm									

For installation see technical section.

*See page 172.

Mounting (see technical section for details):

flush in steel

non-flush on steel

non-metal

Antenna type:

rod

round

BIS003E			**BIS003N**			**BIS003R**			**BIS003T**			**BIS003U**			**BIS003W**					
BIS L-103-05/L			BIS L-150-05/A			BIS L-200-03/L			BIS L-201-03/L			BIS L-202-03/L			BIS L-203-03/L					
						BIS0035			**BIS0038**			**BIS003C**			**BIS003F**					
						BIS L-100-05/L-R0			BIS L-101-05/L-R0			BIS L-102-05/L-R0			BIS L-103-05/L-R0					
10-22	10-15	7-8	0-12																	
10-22	10-15	7-8	0-12			0-25	8-15	8-15	0-30	10-20	10-20	0-40	10-25	10-20	0-15	4-10	3-8			
			±8			±13			±15			±20			±6					
			±8			±13			±15			±20			±6	±7	±5			
			±8			±13			±15			±20			±6	±7	±5			
		±3	±8			±13			±15			±20			±6	±7	±4			
		±2	±8			±13	±8	±6	±15			±20			±6	±6	±3			
±10	±6		±8			±13	±8	±6	±15	±10	±10	±20	±15	±8	±6	±5				
±10	±6		±8			±13	±8	±6	±15	±10	±10	±20	±15	±8	±6					
±10	±2					±13	±0	±0	±15	±10	±8	±20	±15	±6	±6					
±5						±13			±15	±0	±0	±20	±10	±0						
						±13			±15			±20	±0							
									±15			±20								
												±20								
												±20								

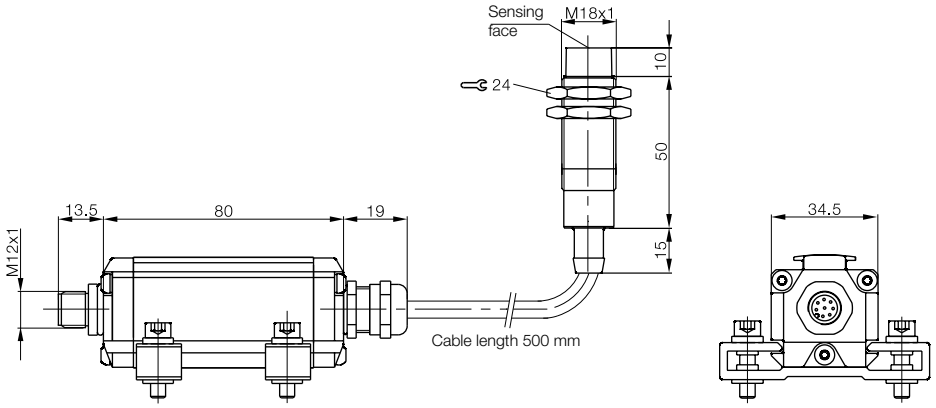

Compact Antenna Style BIS V New Generation

Select a flat design if the available height is limited

Dimensions		**25×50×10 mm**
Housing material		ABS
For standard processor	**Ordering code**	**BIS004Z**
	Part number	BIS L-304-S115
For BIS V processor	**Ordering code**	**BIS00UH**
New Generation*	Part number	BIS VL-304-001-S4
Mounting		
Operating temperature		0...+70 °C (minus temperatures on request)
Storage temperature		–20...+85 °C
Protection per IEC 60529		IP 67
Connection to		Processor
Connection cable		See Connectivity section for cable options

Appropriate data carrier		**BIS0033**			**BIS0036**			**BIS0039**			**BIS003E**			**BIS003N**		
		BIS L-100-01/L			BIS L-101-01/L			BIS L-102-01/L			BIS L-103-05/L			BIS L-150-05/A		
Mounting																
Write distance in mm		0-20	8-15	8-15	0-25	10-20	10-20	0-30	10-25	10-20	10-22	10-15	7-8	0-12		
Read distance in mm		0-20	8-15	8-15	0-25	10-20	10-20	0-30	10-25	10-20	10-22	10-15	7-8	0-12		
Offset in mm at distance	0 mm	±10			±12			±15						±8		
	3 mm	±10			±12			±15						±8		
	4 mm	±10			±12			±15						±8		
	7 mm	±10			±12			±15					±3	±8		
	8 mm	±10	±6	±6	±12			±15					±2	±8		
	10 mm	±10	±5	±5	±12	±10	±8	±15	±15	±10	±10	±6		±8		
	12 mm	±10	±3	±3	±12	±10	±8	±15	±15	±10	±10	±6		±8		
	15 mm	±10	±0	±0	±12	±5	±5	±15	±15	±5	±10	±2				
	20 mm	±10			±12	±0	±0	±15	±10	±0	±5					
	25 mm				±12			±15	±0							
	30 mm							±15								
	35 mm															
	40 mm															

For installation see technical section.

*See page 172.

Mounting (see technical section for details):

flush in steel

non-flush on steel

non-metal

Antenna type:

rod

round

	M12x1
	CuZn
	BIS00RN
	BIS L-306-S115
	BIS00UJ
	BIS VL-306-001-S4
	▬
	0...+70 °C
	–20...+85 °C
	IP 67
	Processor
	See Connectivity section for cable options

	BIS003R			**BIS003T**			**BIS003U**			**BIS003W**			**BIS003W**			**BIS003E**			**BIS0033**		
	BIS L-200-03/L			BIS L-201-03/L			BIS L-202-03/L			BIS L-203-03/L			BIS L-203-03/L			BIS L-103-05/L			BIS L-100-05/L		
	BIS0035			**BIS0035**			**BIS003C**			**BIS003F**			**BIS003F**								
	BIS L-100-05/L-R0			BIS L-100-05/L-R0			BIS L-102-05/L-R0			BIS L-103-05/L-R0			BIS L-103-05/L-R0								
	▬	▬	▬	▬	▬	▬	▬	▬	▬	▬	▬	▬	▬			▬			▬		
																0-7			0-15		
	0-25	8-15	8-15	0-30	10-20	10-20	0-40	10-25	10-20	0-15	4-10	3-8	0-7			0-7			0-15		
	±13			±15			±20			±6			±4			±4			±7		
	±13			±15			±20			±6	±7	±5	±4			±4			±7		
	±13			±15			±20			±6	±7	±5	±4			±4			±7		
	±13			±15			±20			±6	±6	±3	±2			±4			±7		
	±13	±8	±6	±15			±20			±6	±6	±3							±7		
	±13	±8	±6	±15	±10	±10	±20	±15	±8	±6	±5								±7		
	±13	±8	±6	±15	±10	±10	±20	±15	±8	±6									±7		
	±13	±0	±0	±15	±10	±8	±20	±15	±6	±6									±7		
	±13			±15	±0	±0	±20	±10	±0												
	±13			±15			±20	±0													
				±15			±20														
							±20														
							±20														

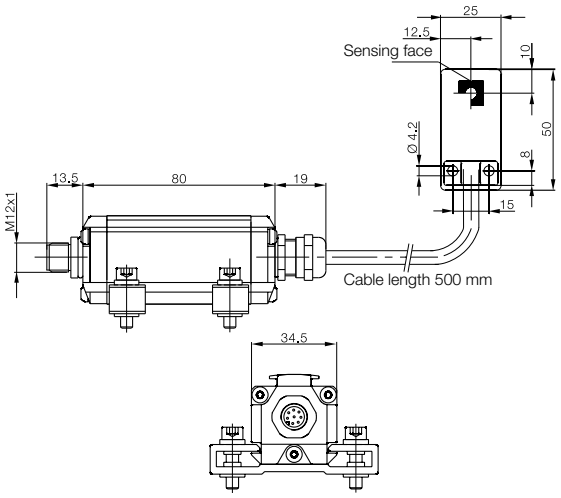

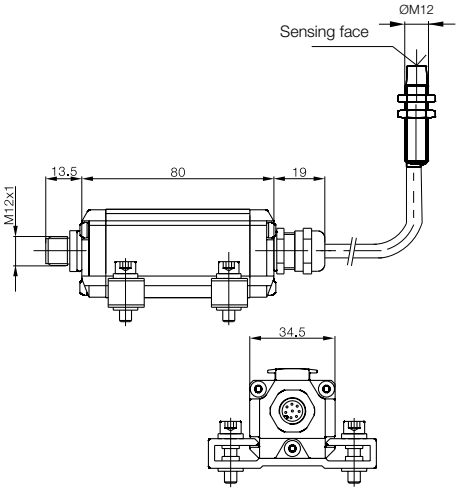

Compact Antenna Style BIS V New Generation

For limited space, even on metal
Small read heads with processor electronics for glass data carriers

Dimensions		
Housing material		
For standard processor	**Ordering code**	
	Part number	
For BIS V processor	**Ordering code**	
New Generation*	Part number	
Mounting		
Operating temperature		
Storage temperature		
Protection per IEC 60529		
Connection to		
Connection cable		

For use with BIS L-150-05/A

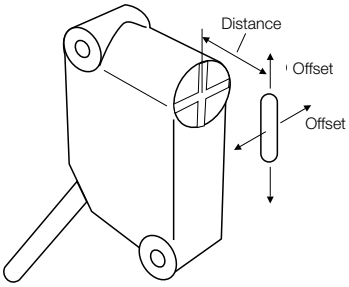

Appropriate data carrier

Mounting		
Write distance in mm		
Read distance in mm		
Offset in mm at distance	0 mm	
	10 mm	
	15 mm	
	20 mm	
	25 mm	

For installation see technical section.

*See page 172.

Mounting (see technical section for details):

flush in steel

non-flush on steel

non-metal

Antenna type:

rod

round

Read/write heads

	26×40×12 mm
	ABS
	BIS0051
	BIS L-350-S115
	BIS00UK
	BIS VL-350-001-S4
	0...+70 °C (minus temperatures on request)
	–20...+85 °C
	IP 67
	Processor
	See Connectivity section for cable options

BIS003N		
BIS L-150-05/A		
0-17	0-24	0-24
0-17	0-24	0-24
±18	±20	±20
±18	±20	±20
±10	±20	±20
	±14	±14
	±14	±14

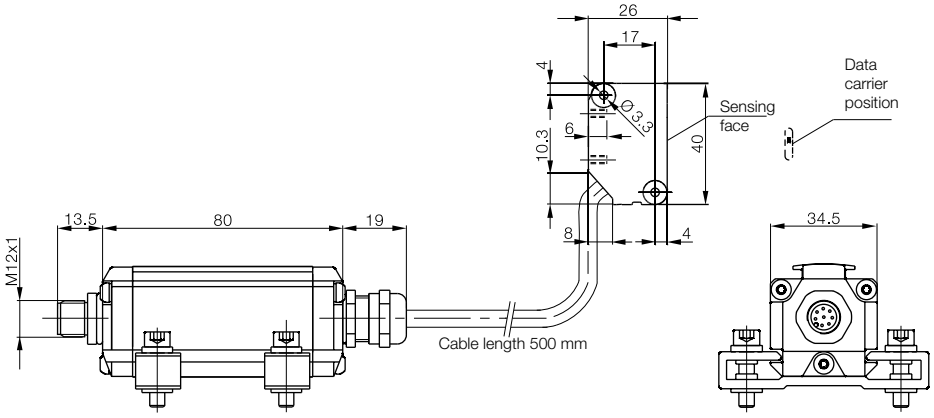

For maximum flexibility from pallet to pallet – with 2-way air interface

Dimensions		**M30×1.5×57.5**
Housing material		CuZn
Base coupler for r/w head	**Ordering code**	**BIS00K1**
	Part number	BIS L-380-ST/10
Data coupler for data carrier	**Ordering code**	
	Part number	
Data coupler for data carrier	**Ordering code**	
	Part number	
Mounting		
Operating temperature		0...+70 °C
Storage temperature		–20...+85 °C
Protection per IEC 60529		IP 67
Connection type		4-pin round connector
For use with		BIS L-300-S115

Appropriate data carrier

For installation see technical section.

Mounting (see technical section for details):

flush in steel

non-flush on steel

non-metal

Antenna type:

rod

round

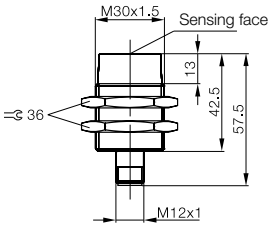

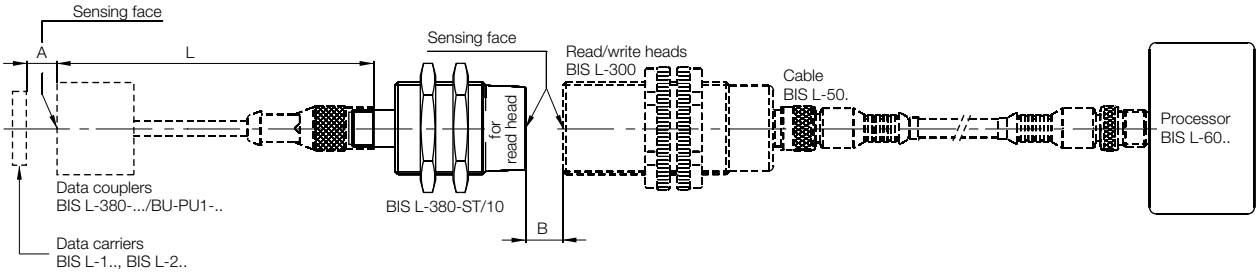

Data couplers

M18×1×45.5	**25×50×10 mm**	**M30×1,5×48,5 mm**
CuZn	ABS	CuZn
BIS00JT	**BIS00JW**	**BIS00JZ**
BIS L-380-02/BU-PU1-00,15	BIS L-380-05/BU-PU1-00,15	BIS L-380-10/BU-PU1-00,5
BIS00JU	**BIS00JY**	
BIS L-380-02/BU-PU1-00,5	BIS L-380-05/BU-PU1-00,5	
—	—	—
0...+70 °C	0...+70 °C	0...+70 °C
–20...+85 °C	–20...+85 °C	–20...+85 °C
IP 67	IP 67	IP 67
4-pin, female	4-pin, female	4-pin, female
BIS L-380-ST/10	BIS L-380-ST/10	BIS L-380-ST/10
BISL003E	**BISL003E**	**BISL0036**
BIS L-103-05/L	BIS L-103-05/L	BIS L-101-01/L

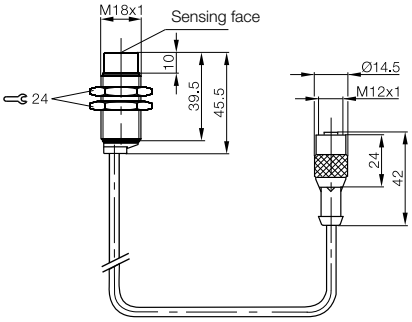

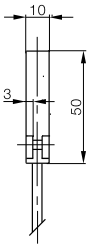

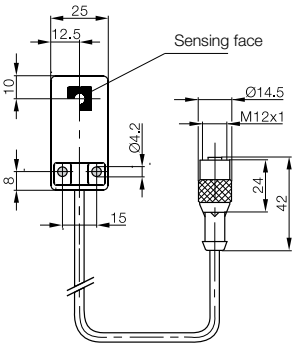

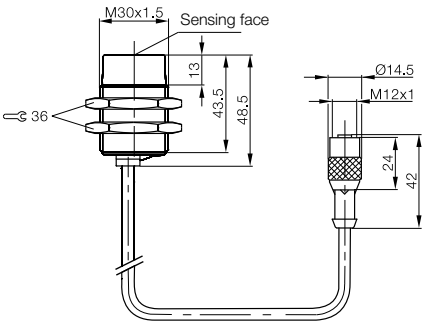

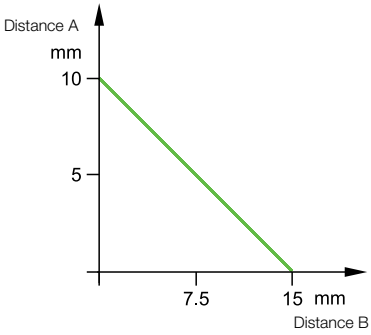

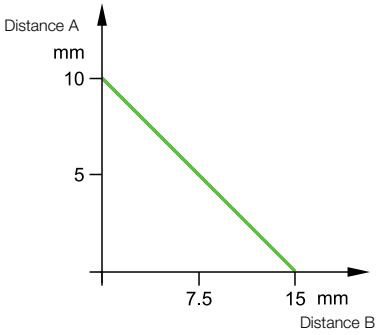

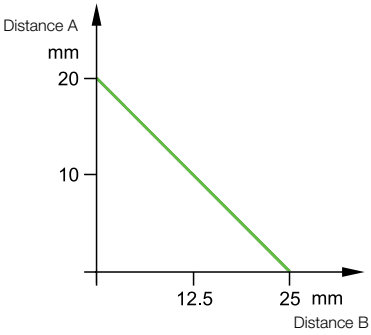

Parallel Read Only

For applications with no controller:
for direct activation of actuators, switches, etc.
Parallel signals for easier integration.
The processors are compact, handy and very easy to install and the recessed antennas, which are available in different designs, make them ideal for a wide variety of different applications.
These simple processors can also be used in dynamic processes: the data from the data carrier last accessed is stored in the cache until retrieved again. The data is available for longer and programming is simplified as a result.
Different antenna characteristics and data carriers are used depending on application requirements.
The selection does not depend on the interface being used – only the design is a decisive factor.
The BIS L-**2**_ _-03/L are read-only data carriers with a fixed 5-byte (40 bits) "unique number".
No repetition of the unique number or delivery of sequential numbers is possible – other options are available here. These data carrier types are used with BIS L-405-**033**-... processors.

Secure is secure: CRC test
The CRC 16 check sum can be used for applications with higher demands for data integrity. A check sum that allows the validity of data to be checked anywhere and at any time is stored on the data carrier. Discrepancies are diagnosed immediately.
The BIS L-405-**037**-... processor checks the correctness of the read data using a CRC-16 check sum. The CRC value is calculated automatically using the data in bytes 0, 1 and 2 of the data carrier. Stored in bytes 3 and 4 of the data carrier, this CRC 16 check sum guarantees an extremely high degree of data integrity without requiring additional programming work.

In order to use the CRC-16 check sum, the type BIS L-10_-05/L data carriers must first be initialized using a BIS L-60_ _ processor and BISCOMRW.EXE software. 3 bytes are available for the user data.
The BIS L-405-037-... processor can only be operated using initialized type BIS L-10_-05/L data carriers.

LED function indicators included

Description/Dimensions			**Module 40×41×120 mm**
Housing material			PBT
Parallel		**Ordering code**	**BIS00CM**
		Part number	BIS L-405-033-001-05-MU
CRC check		**Ordering code**	**BIS00CT**
		Part number	BIS L-405-037-001-05-MU
Sensor base	5 m cable	**Ordering code**	
		Part number	
	10 m cable	**Ordering code**	
		Part number	
	15 m cable	**Ordering code**	
		Part number	
	20 m cable	**Ordering code**	
		Part number	
Mounting			
Supply voltage, Ripple			24 V DC ± 10 %/-20 %, ≤ 10 %
Current			≤ 50 mA no load
Operating temperature			0...+70 °C
Protection per IEC 60529			IP 67 when assembled
Connection type			requires mounting base
Control I/O			
Connection base (please order separately)			BIS L-503-PU/_ _ _

Appropriate data carrier		**BIS003R** BIS L-200-03/L	**BIS0035** BIS L-100-05/L-RO	**BIS003T** BIS L-201-03/L	**BIS0038** BIS L-101-05/L-RO	**BIS003U** BIS L-202-03/L	**BIS003C** BIS L-102-05/L-RO	**BIS003W** BIS L-203-03/L	**BIS003F** BIS L-103-05/L-RO
Mounting									
Read distance in mm		0-30		0-40		0-55		0-20	
Offset in mm at distance	0 mm	±15		±20		±30		±10	
	5 mm	±15		±20		±30		±10	
	8 mm	±15		±20		±30		±10	
	10 mm	±15		±20		±30		±10	
	15 mm	±15		±20		±30		±10	
	20 mm	±15		±20		±30			
	25 mm	±15		±20		±30			
	30 mm			±20		±30			
	35 mm			±20		±30			
	40 mm					±30			
	45 mm					±30			

Mounting (see technical section for details):

- flush in steel
- non-flush on steel
- non-metal

Antenna type:

- rod
- round

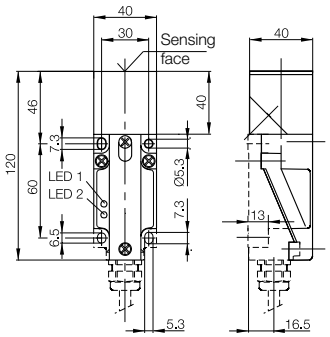

BIS L Industrial RFID System

Read/write heads with integrated processors

Module M18	**M12**	**25×50×10 mm**	**Connection**
CuZn	CuZn	ABS	PBT
BIS00CN	**BIS00CP**	**BIS00CR**	
BIS L-405-033-002-05-MU	BIS L-405-033-003-05-MU	BIS L-405-033-004-05-MU	
BIS00CU	**BIS00CW**	**BIS00CY**	
BIS L-405-037-002-05-MU	BIS L-405-037-003-05-MU	BIS L-405-037-004-05-MU	
			BCC00R2
			BIS L-503-PU1-05
			BCC00R3
			BIS L-503-PU1-10
			BCC00R4
			BIS L-503-PU1-15
			BCC00R5
			BIS L-503-PU1-20
24 V DC ± 10 %/-20 %, ≤ 10 %	24 V DC ± 10 %/-20 %, ≤ 10 %	24 V DC ± 10 %/-20 %, ≤ 10 %	
≤ 50 mA no load	≤ 50 mA no load	≤ 50 mA no load	
0...+70 °C	0...+70 °C	0...+70 °C	0...+70 °C
IP 67 when assembled	IP 67 when assembled	IP 67 when assembled	IP 67 when assembled
requires mounting base	requires mounting base	requires mounting base	
			2 inputs / 10 outputs
BIS L-503-PU/_ _ _	BIS L-503-PU/_ _ _	BIS L-503-PU/_ _ _	

BIS003R BIS L-200-03/L	**BIS0035** BIS L-100-05/L-RO	**BIS003T** BIS L-201-03/L	**BIS0038** BIS L-101-05/L-RO	**BIS003W** BIS L-203-03/L	**BIS003F** BIS L-103-05/L-RO	**BIS003W** BIS L-203-03/L	**BIS003F** BIS L-103-05/L-RO	**BIS003R** BIS L-200-03/L	**BIS0035** BIS L-100-05/L-RO	**BIS003T** BIS L-201-03/L	**BIS0038** BIS L-101-05/L-RO	**BIS003W** BIS L-203-03/L	**BIS003F** BIS L-103-05/L-RO
0-23		0-27		0-16		0-11		0-23		0-27		0-16	
±12		±15		±8		±6		±12		±15		±8	
±12		±15		±8		±6		±12		±15		±8	
±12		±15		±8		±4		±12		±15		±8	
±12		±15		±8		±2		±12		±15		±8	
±12		±15		±4				±12		±15		±4	
		±15						±8		±15			
		±6								±6			

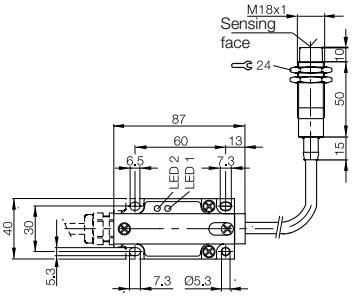

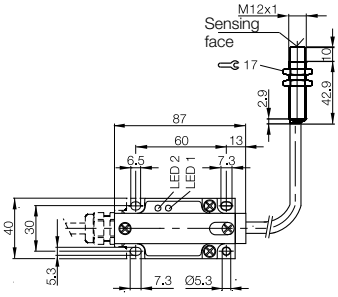

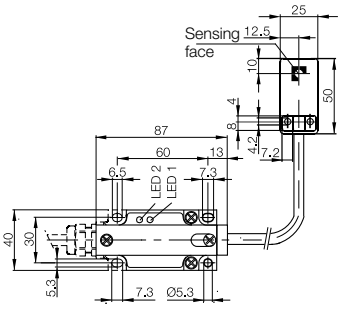

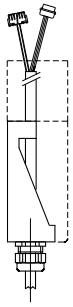

Serial Read Only

LED function indicators included

Description/Dimensions			**40×41×120 mm**
Housing material			PBT
Serial	RS232	**Ordering code**	**BIS00C5**
		Part number	BIS L-400-035-001-00-S115
	RS422	**Ordering code**	**BIS00C6**
		Part number	BIS L-400-035-001-02-S115
Mounting			
Supply voltage, Ripple			24 V DC +10 %/–20 %, ≤ 10 %
Current			≤ 50 mA
Operating temperature			0...+70 °C
Protection per IEC 60529			IP 67
Connection type			8-pin M12 male
Connection cable			See Connectivity section for cable options

Easy ID solutions are not only available with a parallel interface, but also with a serial interface, which is why they are suitable for smart, single-celled production platforms. Balluff offers different point-to-point connections specific to each device.
The range extends from interfaces such as RS232, RS422 to IO-Link. A "daisy chain" configuration with RS232 or Ethernet TCP/IP is also possible.
Systems with or without recessed antennas are available to allow a flexible response to different installation situations such as cramped spaces, for example.
These simple processors can also be used in dynamic processes: the data from the data carrier last accessed is stored in the cache until retrieved again. The data is available for longer and programming is simplified as a result.
A distinction is made between use of the type BIS L-2_ _-03/L data carrier and the programmed data carrier with type BIS L-10_-05/L CRC check. The processors must be parameterized accordingly using the relevant configuration software. Different antenna characteristics and data carriers are used depending on application requirements.
The selection does not depend on the interface being used – only the design is a decisive factor.

BIS L at a glance
- Tough
- Compact
- Read only
- Simple to integrate

For simple connection to the controller: readable data carriers only

Appropriate data carrier		**BIS003R** BIS L-200-03/L	**BIS0035** BIS L-100-05/L-RO	**BIS003T** BIS L-201-03/L	**BIS0038** BIS L-101-05/L-RO	**BIS003U** BIS L-202-03/L	**BIS003C** BIS L-102-05/L-RO	**BIS003W** BIS L-203-03/L	**BIS003F** BIS L-103-05/L-RO
Mounting									
Read distance in mm		0-30		0-40		0-55		0-20	
Offset in mm at distance	0 mm	±15		±20		±30		±10	
	5 mm	±15		±20		±30		±10	
	8 mm	±15		±20		±30		±10	
	10 mm	±15		±20		±30		±10	
	15 mm	±15		±20		±30		±10	
	20 mm	±15		±20		±30			
	25 mm	±15		±20		±30			
	30 mm	±4		±20		±30			
	35 mm			±20		±30			
	40 mm					±30			
	45 mm					±30			
	50 mm					±6			

For installation see technical section.

Mounting (see technical section for details):

flush in steel

non-flush on steel

non-metal

Antenna type:

rod

round

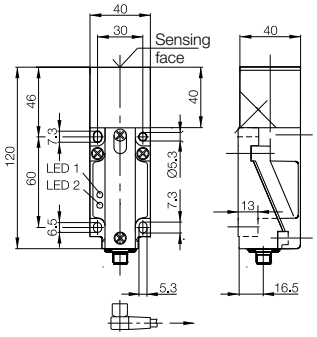

BIS L Industrial RFID System

Read/write heads with integrated processors

M18	**M12**	**25×50×10 mm**
CuZn	CuZn	ABS
BIS00C7	**BIS00C9**	**BIS00CC**
BIS L-400-035-002-00-S115	BIS L-400-035-003-00-S115	BIS L-400-035-004-00-S115
BIS00C8	**BIS00CA**	
BIS L-400-035-002-02-S115	BIS L-400-035-003-02-S115	
24 V DC +10 %/–20 %, ≤ 10 %	24 V DC ±10 %/–20 %, ≤ 10 %	24 V DC ±10 %/–20 %, ≤ 10 %
≤ 50 mA no load	≤ 50 mA no load	≤ 50 mA no load
0...+70 °C	0...+70 °C	0...+70 °C
IP 67	IP 67	IP 67
8-pin M12 male	8-pin M12 male	8-pin M12 male
See Connectivity section for cable options	See Connectivity section for cable options	See Connectivity section for cable options

BIS003R BIS L-200-03/L	**BIS0035** BIS L-100-05/L-RO	**BIS003T** BIS L-201-03/L	**BIS0038** BIS L-101-05/L-RO	**BIS003W** BIS L-203-03/L	**BIS003F** BIS L-103-05/L-RO	**BIS003W** BIS L-203-03/L	**BIS003F** BIS L-103-05/L-RO	**BIS003R** BIS L-200-03/L	**BIS0035** BIS L-100-05/L-RO	**BIS003T** BIS L-201-03/L	**BIS0038** BIS L-101-05/L-RO	**BIS003W** BIS L-203-03/L	**BIS003F** BIS L-103-05/L-RO
0-23		0-27		0-16		0-11		0-23		0-27		0-16	
±12		±15		±8		±6		±12		±15		±8	
±12		±15		±8		±6		±12		±15		±8	
±12		±15		±8		±8		±12		±15		±8	
±12		±15		±8		±2		±12		±15		±8	
±12		±15		±4				±12		±15		±4	
±12		±15						±8		±15			
		±6								±6			

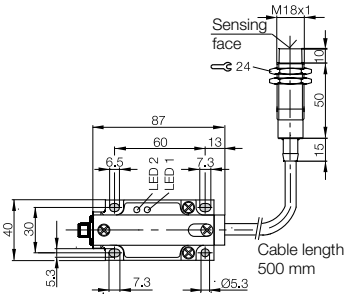

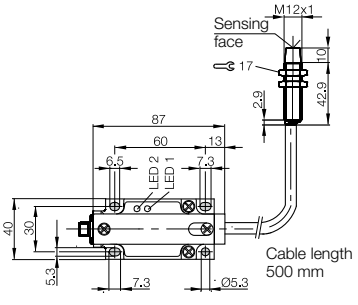

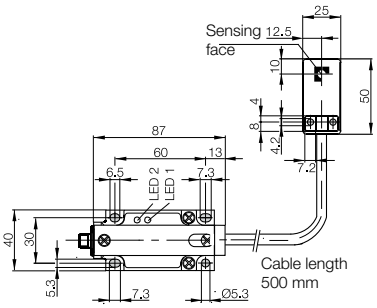

BIS L Industrial RFID System

Read/write heads with integrated processors

IO-Link
Read Only

IO-Link

Easy ID solutions are not only available with a parallel interface, but also with a serial interface, which is why they are suitable for smart, single-celled production platforms. Balluff offers different point-to-point connections specific to each device.
The range extends from interfaces such as RS232, RS422 to IO-Link. A "daisy chain" configuration with RS232 or Ethernet TCP/IP is also possible. Systems with or without recessed antennas are available to allow a flexible response to different installation situations such as cramped spaces, for example.
These simple processors can also be used in dynamic processes: the data from the data carrier last accessed is stored in the cache until retrieved again. The data is available for longer and programming is simplified as a result.
A distinction is made between use of the type BIS L-2_ _-03/L data carrier and the programmed data carrier with type
BIS L-10_-05/L CRC check. The processors must be parameterized accordingly using the relevant configuration software. Different antenna characteristics and data carriers are used depending on application requirements.
The selection does not depend on the interface being used – only the design is a decisive factor.

BIS L at a glance

- Tough
- Compact
- Read only
- Simple to integrate

LED funtion indicators included

Description/Dimensions		**40×41×120 mm**
Housing material		PBT
IO-Link 8 byte	**Ordering code**	**BIS00CZ**
	Part number	BIS L-409-045-001-07-S4
Mounting		
Supply voltage, Ripple		24 V DC +10 %/–20 %, ≤ 10 %
Current		≤ 150 mA
Operating temperature		0...+70 °C
Protection per IEC 60529		IP 67
Connection type		4-pin M12 male
Connection cable		See Connectivity section for cable options

Appropriate data carrier		**BIS003R** BIS L-200-03/L	**BIS0035** BIS L-100-05/L-RO	**BIS003T** BIS L-201-03/L	**BIS0038** BIS L-101-05/L-RO	**BIS003U** BIS L-202-03/L	**BIS003C** BIS L-102-05/L-RO	**BIS003W** BIS L-203-03/L	**BIS003F** BIS L-103-05/L-RO
Mounting									
Read distance in mm		0-25		0-35		0-48		0-16	
Offset in mm at distance	0 mm	±15		±20		±25		±10	
	3 mm	±15		±20		±25		±10	
	4 mm	±15		±20		±25		±10	
	5 mm	±15		±20		±25		±10	
	7 mm	±15		±20		±25		±10	
	8 mm	±15		±20		±25		±10	
	10 mm	±15		±20		±25		±10	
	12 mm	±15		±20		±25		±10	
	15 mm	±15		±20		±25		±10	
	20 mm	±15		±20		±25			
	25 mm	±8		±20		±25			
	30 mm			±20		±25			
	35 mm			±20		±25			
	40 mm					±25			
	45 mm					±25			
IO-Link									
Mode		COM 2							
Transfer rate		38.4 baud							

For installation see technical section.

Mounting (see technical section for details):

- flush in steel
- non-flush on steel
- non-metal

Antenna type:

- rod
- round

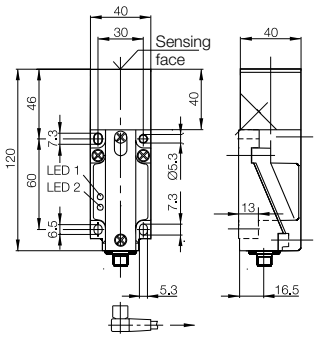

For information on other IO-Link and networking products, refer to our "Industrial Networking and Connectivity" catalog or visit us online at **www.balluff.com**

Read/write heads with integrated processors

	M18										**M12**								**25×50×10 mm**										
	CuZn										CuZn								ABS										
	BIS00E0										**BIS00E1**								**BIS00E2**										
	BIS L-409-045-002-07-S4										BIS L-409-045-003-07-S4								BIS L-409-045-004-07-S4										
	▬										▬								▬										
	24 V DC +10 %/–20 %, ≤ 10 %										24 V DC ±10 %/–20 %, ≤ 10 %								24 V DC ±10 %/–20 %, ≤ 10 %										
	≤ 150 mA										≤ 150 mA no load								≤ 150 mA no load										
	0...+70 °C										0...+70 °C								0...+70 °C										
	IP 67										IP 67								IP 67										
	8-pin M12 male										8-pin M12 male								8-pin M12 male										
	See Connectivity section for cable options										See Connectivity section for cable options								See Connectivity section for cable options										
	BIS003R	**BIS0035**	**BIS003T**	**BIS0038**	**BIS003W**	**BIS003F**					**BIS003W**	**BIS003F**							**BIS003R**	**BIS0035**	**BIS003T**	**BIS0038**	**BIS003W**	**BIS003F**					
	BIS L-200-03/L	BIS L-100-05/L-RO	BIS L-201-03/L	BIS L-101-05/L-RO	BIS L-203-03/L	BIS L-103-05/L-RO					BIS L-203-03/L	BIS L-103-05/L-RO							BIS L-200-03/L	BIS L-100-05/L-RO	BIS L-201-03/L	BIS L-101-05/L-RO	BIS L-203-03/L	BIS L-103-05/L-RO					
	▬		▬		▬						▬								▬		▬		▬						
	0-15		0-18		0-10						0-7								0-15		0-18		0-10						
	±10		±12		±4						±4								±10		±12		±4						
	±10		±12		±4						±4								±10		±12		±4						
	±10		±12		±4						±4								±10		±12		±4						
	±10		±12		±4						±4								±10		±12		±4						
	±10		±12		±4														±10		±12		±4						
	±10		±12		±4														±10		±12		±4						
	±10		±12		±4														±10		±12		±4						
			±12																		±12								
			±12																		±12								
	COM 2										COM 2								COM 2										
	38.4 kbaud										38.4 kbaud								38.4 kbaud										

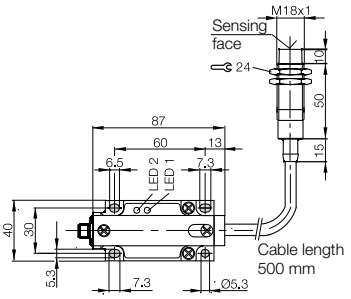

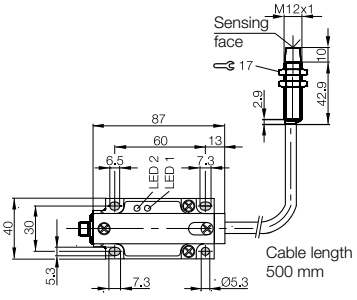

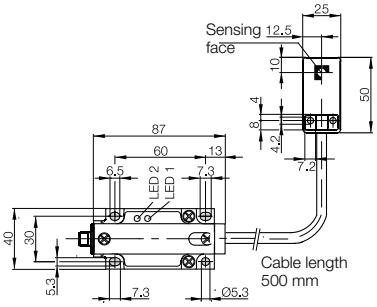

BIS L Industrial RFID System

Read/write heads with integrated processors

easy loop® Read Only

LED function indicators included

Description/Dimensions		**40×41×120 mm**
Housing material		PBT
RS422/easy loop®	**Ordering code**	**BIS00CH**
	Part number	BIS L-400-043-001-02-S115
Mounting		▬
Supply voltage, Ripple		24 V DC +10 %/–20 %, ≤ 10 %
Current		≤ 50 mA
Operating temperature		0...+70 °C
Protection per IEC 60529		IP 67
Connection type		8-pin M12 male
Connection cable		See Connectivity section for cable options

Appropriate data carrier		**BIS003R** BIS L-200-03/L	**BIS0035** BIS L-100-05/L-RO	**BIS003T** BIS L-201-03/L	**BIS0038** BIS L-101-05/L-RO	**BIS003U** BIS L-202-03/L	**BIS003C** BIS L-102-05/L-RO	**BIS003W** BIS L-203-03/L	**BIS003F** BIS L-103-05/L-RO
Mounting		▬		▬		▬		▬	
Read distance in mm		0-30		0-40		0-55		0-20	
Offset in mm at distance	0 mm	±15		±20		±30		±10	
	3 mm	±15		±20		±30		±10	
	4 mm	±15		±20		±30		±10	
	5 mm	±15		±20		±30		±10	
	7 mm	±15		±20		±30		±10	
	8 mm	±15		±20		±30		±10	
	10 mm	±15		±20		±30		±10	
	12 mm	±15		±20		±30		±10	
	15 mm	±15		±20		±30		±10	
	20 mm	±15		±20		±30			
	25 mm	±15		±20		±30			
	30 mm			±20		±30			
	35 mm			±20		±30			
	40 mm					±30			
	45 mm					±30			
	50 MM					±6			

Easy ID solutions are not only available with a parallel interface, but also with a serial interface, which is why they are suitable for smart, single-celled production platforms. Balluff offers different point-to-point connections specific to each device.
The range extends from interfaces such as RS232, RS422 to IO-Link. A "daisy chain" configuration with RS232 or Ethernet TCP/IP is also possible. Systems with or without recessed antennas are available to allow a flexible response to different installation situations such as cramped spaces, for example.
These simple processors can also be used in dynamic processes: the data from the data carrier last accessed is stored in the cache until retrieved again. The data is available for longer and programming is simplified as a result.
A distinction is made between use of the type BIS L-2_ _-03/L data carrier and the programmed data carrier with type BIS L-10_-05/L CRC check. The processors must be parameterized accordingly using the relevant configuration software. Different antenna characteristics and data carriers are used depending on application requirements.
The selection does not depend on the interface being used – only the design is a decisive factor.

BIS L at a glance

- Tough
- Compact
- Read only
- Simple to integrate

For installation see technical section.

Mounting (see technical section for details):

▬ flush in steel

▬ non-flush on steel

▬ non-metal

Antenna type:

rod

round

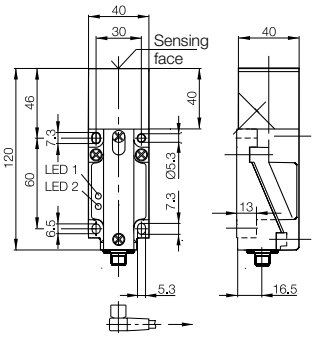

BIS L Industrial RFID System

Read/write heads with integrated processors

M18	**M12**	**25×50×10 mm**
CuZn	CuZn	ABS
BIS00CJ	**BIS00CK**	**BIS00CL**
BIS L-400-043-002-02-S115	BIS L-400-043-003-02-S115	BIS L-400-043-004-02-S115
▬	▬	▬
24 V DC +10 %/–20 %, ≤ 10 %	24 V DC ±10 %/–20 %, ≤ 10 %	24 V DC ±10 %/–20 %, ≤ 10 %
≤ 50 mA	≤ 50 mA no load	≤ 50 mA no load
0...+70 °C	0...+70 °C	0...+70 °C
IP 67	IP 67	IP 67
8-pin M12 male	8-pin M12 male	8-pin M12 male
See Connectivity section for cable options	See Connectivity section for cable options	See Connectivity section for cable options

BIS003R BIS L-200-03/L	**BIS0035** BIS L-100-05/L-RO	**BIS003T** BIS L-201-03/L	**BIS0038** BIS L-101-05/L-RO	**BIS003W** BIS L-203-03/L	**BIS003F** BIS L-103-05/L-RO	**BIS003W** BIS L-203-03/L	**BIS003F** BIS L-103-05/L-RO	**BIS003R** BIS L-200-03/L	**BIS0035** BIS L-100-05/L-RO	**BIS003T** BIS L-201-03/L	**BIS0038** BIS L-101-05/L-RO	**BIS003W** BIS L-203-03/L	**BIS003F** BIS L-103-05/L-RO
▬		▬		▬		▬		▬		▬		▬	
0-23		0-27		0-16		0-11		0-23		0-27		0-16	
±12		±15		±8		±6		±12		±15		±8	
±12		±15		±8		±6		±12		±15		±8	
±12		±15		±8		±6		±12		±15		±8	
±12		±15		±8		±4		±12		±15		±8	
±12		±15		±8		±4		±12		±15		±8	
±12		±15		±8		±4		±12		±15		±8	
±12		±15		±8		±2		±12		±15		±8	
±12		±15		±4				±12		±15		±4	
±12		±15		±4				±12		±15		±4	
±12		±15						±8		±15			
		±6								±6			

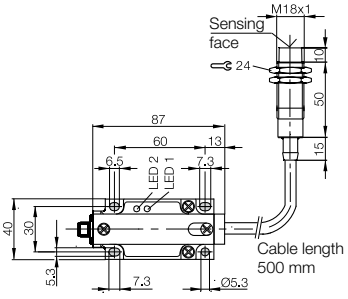

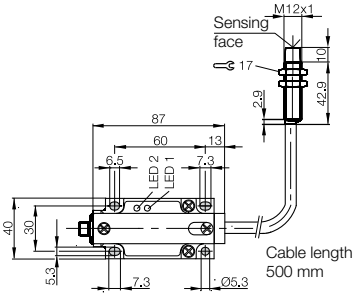

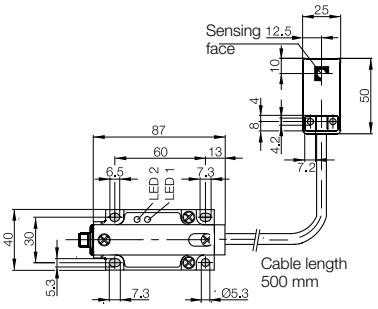

Cost-effective identification – operate 2 read/write heads simultaneously

- Sequential reading of the data carrier ID number on both read/write heads
- Service-friendly, all parameter data are stored in an interchangeable memory
- Accepts all read/write heads
- Interface-compatible with BIS C, BIS S and BIS M identification systems

Easy integration in all controllers

The **compact class BIS L-600_** with its reduced dimensions and various interface options can be used wherever ambient conditions require higher protection.

The devices are ideal for IP 65 and applications involving media that is not aggressive to PS plastic.

Small, compact, flexible and economical

The **ruggedized version BIS L-602_** is in spite of the mechanically rugged die-cast aluminum housing a small, flexible processor which is available with various interface options.

Suitable for all applications with demanding requirements for mechanical rigidity and chemical resistance.

Description		
RS232/Balluff Dialog	**Ordering code**	
	Part number	
Supply voltage, Ripple		
Current		
Operating temperature		
Storage temperature		
Protection per IEC 60529		
Read/write head ports		
Connection for		
Connection type		
Accessories included		
Connection cable		

Processors

	Processor	Processor
	BIS00E3	**BIS00E8**
	BIS L-6000-007-050-00-ST15	BIS L-6020-007-050-00-ST15
	24 V DC ±20 %, ≤ 10 %	24 V DC ±20 %, ≤ 10 %
	≤ 400 mA	≤ 400 mA
	0...+60 °C	0...+60 °C
	0...+60 °C	0...+60 °C
	IP 65	IP 65
	2 external	2 external
	2 read/write heads BIS L-3_ _	2 read/write heads BIS L-3_ _
	2 connector round 5-pin	2 connector round 5-pin
	Configuration software	Configuration software
	See Connectivity section for cable options	See Connectivity section for cable options

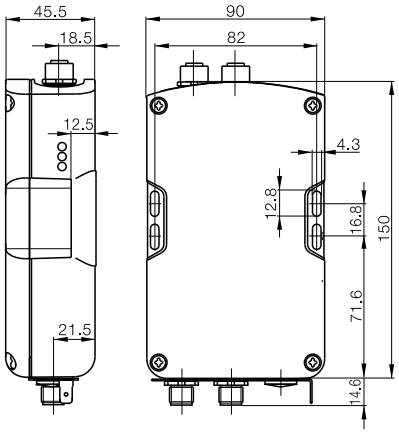

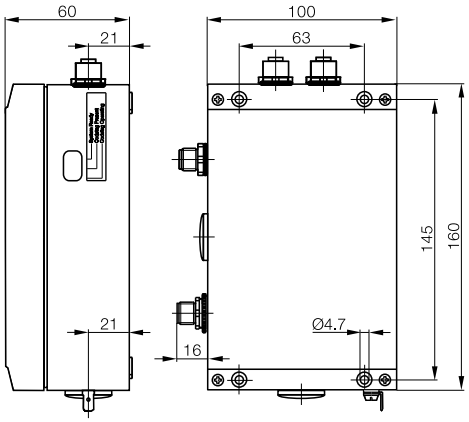

PROFIBUS-DP

Cost-effective identification – operate 2 read/write heads simultaneously

- Selectable division of the data width on the PROFIBUS-DP, 4 to 128 bytes
- Free assigning of the data width for each read/write head
- Optimum data speed, internal cycle time is shorter than the BUS activation time
- Service-friendly, all parameter data are stored in an interchangeable memory
- BUS address selectable with switches
- Accepts all read/write heads
- Interface-compatible with BIS C and BIS M identification systems

Description		
PROFIBUS-DP	**Ordering code**	
	Part number	
Supply voltage, Ripple		
Current		
Operating temperature		
Storage temperature		
Protection per IEC 60529		
Read/write head ports		
Service interface		
Connection for		
Connection type		
Accessories included		
Connection cable		

The **compact class BIS L-600_** with its reduced dimensions and various interface options can be used wherever ambient conditions require higher protection.

The devices are ideal for IP 65 and applications involving media that is not aggressive to PS plastic.

Small, compact, flexible and economical

Processors

	Processor	Processor
	BIS00E6	**BIS00EC**
	BIS L-6002-019-050-03-ST11	BIS L-6022-019-050-03-ST14
	24 V DC ±20 %, ≤ 10 %	24 V DC ±20 %, ≤ 10 %
	≤ 400 mA	≤ 400 mA
	0...+60 °C	0...+60 °C
	0...+60 °C	0...+60 °C
	IP 65	IP 65
	2 external	2 external
	RS232	RS232
	2 read/write heads BIS L-3_ _	2 read/write heads BIS L-3_ _
	2 connector round 5-pin, B-coded	2 connector round 5-pin, B-coded
	1 connector round 5-pin	2 connector round 4-pin
	Software GSD-file	Software GSD-file
	See Connectivity section for cable options	See Connectivity section for cable options

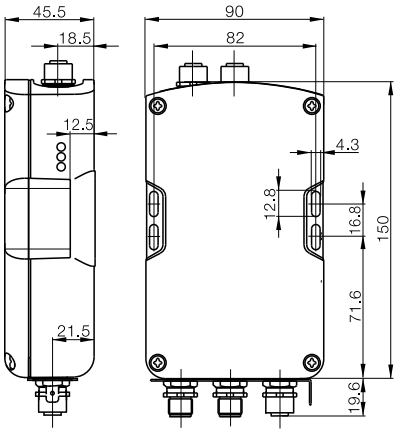

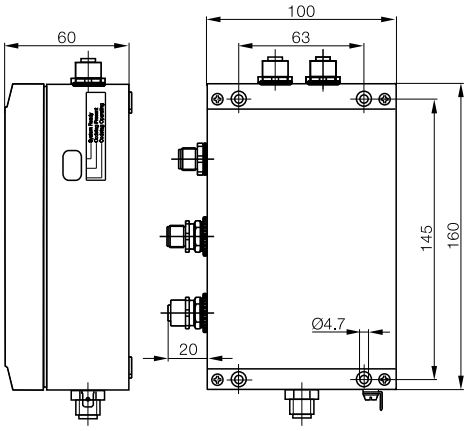

The **ruggedized version BIS L-602_** is in spite of the mechanically rugged die-cast aluminum housing a small, flexible processor which is available with various interface options.

Suitable for all applications with demanding requirements for mechanical rigidity and chemical resistance.

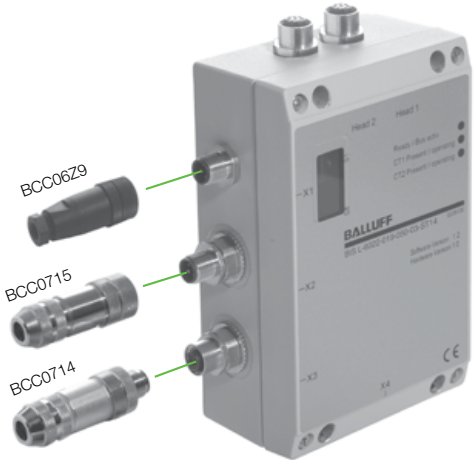

Threaded cover
Ordering code: BAM0114
Part number: BKS 12-CS-01
coded for M12 B connector type

DeviceNet™

Cost-effective identification – operate 2 read/write heads simultaneously

- Freely selectable buffer size between 0 and 256 bytes
- Service-friendly, all parameter data are stored in an interchangeable memory
- Accepts all read/write heads
- Interface-compatible with BIS C and BIS M identification systems

Description		
DeviceNet	**Ordering code**	
	Part number	
Supply voltage, Ripple		
Current		
Operating temperature		
Storage temperature		
Protection per IEC 60529		
Read/write head ports		
Service interface		
Connection for		
Connection type		
Accessories included		
Connection cable		

The **compact class BIS L-600_** with its reduced dimensions and various interface options can be used wherever ambient conditions require higher protection.

The devices are ideal for IP 65 and applications involving media that is not aggressive to PS plastic.

Small, compact, flexible and economical

Processors

Processor	Processor
BIS00E7	**BIS00EE**
BIS L-6003-025-050-03-ST12	BIS L-6023-025-050-03-ST13
24 V DC ±20 %, ≤ 10 %	24 V DC ±20 %, ≤ 10 %
≤ 600 mA	≤ 600 mA
0...+60 °C	0...+60 °C
0...+60 °C	0...+60 °C
IP 65	IP 65
2 external	2 external
RS232	RS232
2 read/write heads BIS L-3_ _	2 read/write heads BIS L-3_ _
3 round, 5-pin connectors	4 round, 5-pin connectors
Software EDS-file	Software EDS-file
See Connectivity section for cable options	See Connectivity section for cable options

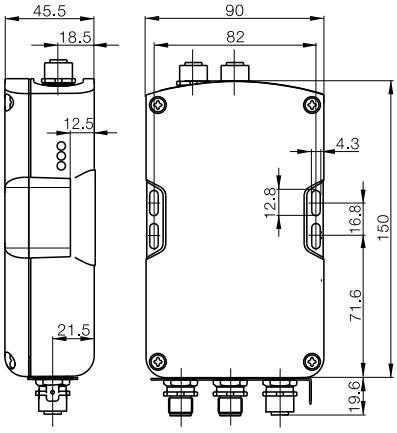

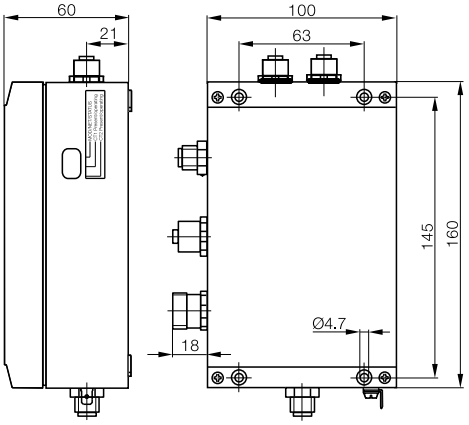

The **ruggedized version BIS L-60_ _** is in spite of the mechanically rugged die-cast aluminum housing a small, flexible processor which is available with various interface options.

Suitable for all applications with demanding requirements for mechanical rigidity and chemical resistance.

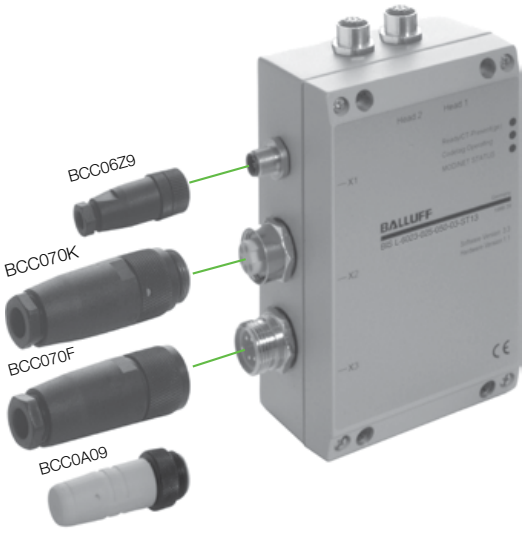

Cost-effective identification – operate 2 read/write heads simultaneously.

Description		Processor
EtherNet/IP	**Ordering code**	**BIS00EF**
	Part number	BIS L-6026-034-050-06-ST19
Supply voltage, Ripple		24 V DC ±20 %, ≤ 10 %
Current		≤ 400 mA
Operating temperature		0...+60 °C
Storage temperature		0...+60 °C
Protection per IEC 60529		IP 65
Read/write head ports		2 external
Service interface		RS232
Connection for		Read/write heads BIS L-3_ _
Connection type		Connector round 4-pin, D-coded 1 connector 5-pin 1 connector 4-pin
Accessories included		Configuration software
Connection cable		See Connectivity section for cable options

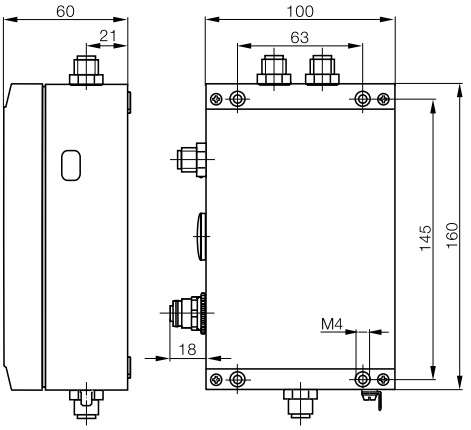

Ethernet TCP/IP

BIS L Industrial RFID System
Processors

Operate 2 read/write heads sequentially.

Description		Processor
EtherNet TCP/IP	**Ordering code**	**BIS00EH**
	Part number	BIS L-6027-039-050-06-ST19
Supply voltage, Ripple		24 V DC ±20 %, ≤ 10 %
Current		≤ 400 mA
Operating temperature		0...+60 °C
Storage temperature		0...+60 °C
Protection per IEC 60529		IP 65
Read/write head ports		2 external
Service interface		RS232
Connection for		Read/write heads BIS L-3_ _
Connection type		Connector round 4-pin, D-coded 1 connector 5-pin 1 connector 4-pin
Accessories included		Configuration software
Connection cable		See Connectivity section for cable options

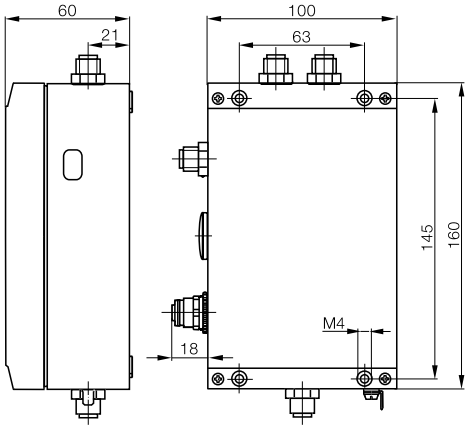

BIS V New Generation

A new generation system for more flexible RFID:
Combine up to four low and high frequency read/write heads with I/O in one device.
The BIS V Radio Frequency Identification (RFID) system is founded on a new generation of RFID processors that maximize your flexibility by providing a single device for both low frequency 125Khz and high frequency 13.56Mhz read/write heads with an IO-Link master port. Combining up to four heads on either frequency with local analog, valve manifold or I/O access/control provides a solution you can apply to many types of RFID applications.This can save cost and time using a single processor platform across your application installation base. The BIS V system also allows you to draw on a single processor family with a wide array of read/write head and RFID tag options for both manufacturing and logistics solutions.

The BIS V RFID system offers a higher level of performance than other systems to solve today's industrial applications. Designed to maximize performance while improving usability out on the line, the BIS V processor provides a functional display and LED's making status and setup easier. And a USB service interface makes connection for setup to today's PC's simple. The BIS V offers these additional functions:

- Four asynchronous 125Khz and 13.56Mhz read/write antenna channels.
- LCD display with control buttons for setting and displaying the Profibus address and data carrier/tags UID.
- An integrated IO-Link master port for connecting discrete or analog I/O, or valve manifolds.
- Intelligent power plug option for saving parameters on the device.
- Industrial IP rated metal housing for any application environment.
- Flexible mounting options for hard-point or DIN rail.

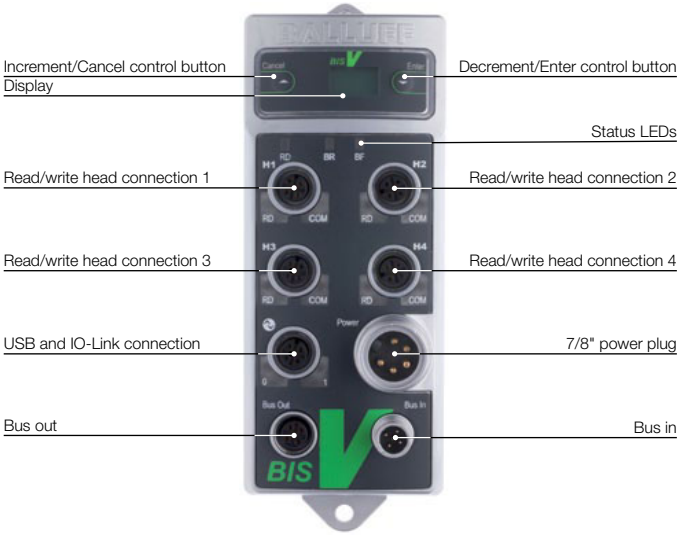

Description		
PROFIBUS-DP	**Ordering code**	
	Part number	
EtherCAT	**Ordering code**	
	Part number	
CC-Link	**Ordering code**	
	Part number	
Ethernet/IP	**Ordering code**	
	Part number	
Supply voltage, Ripple		
Current		
Operating temperature		
Storage temperature		
Protection per IEC 60529		
Read/write head ports		
Service interface		
Control inputs / outputs		
Connection for		
Connection type		
Accessories included		
Connection cable		

See pages 142, 144, 148, 150, 152 for read/write heads.

The following communication options will become available in 2013/2014:
Ethernet/IP, CC-Link, ProfiNet, and TCP/IP

Processors

BIS V RFID Unit	**BIS V RFID Unit**	**BIS V RFID Unit**
BIS00T3		
BIS V-6102-019-C001		
		BIS00U9
		BIS V-6110-063-C002
BIS010P		
BIS V-6111-073-C003		
	BIS0122	
	BIS V-6106-034-C004	
24V DC ±10% LPS Class 2, ≤ 10%	24V DC ±10% LPS Class 2, ≤ 10%	24V DC ±10% LPS Class 2, ≤ 10%
≤ 2 A	≤ 2 A	≤ 2 A
0...+60 °C	0...+60 °C	0...+60 °C
0...+60 °C	0...+60 °C	0...+60 °C
IP 65	IP 65	IP 65
4 - M12 5-pin A-coded	4 - M12 5-pin A-coded	4 - M12 5-pin A-coded
IO-Link 1.1, USB 2.0	IO-Link 1.1, USB 2.0	IO-Link 1.1, USB 2.0
IO-Link based	IO-Link based	IO-Link based
4 Read/write head BIS VM-3_ _ _	4 Read/write head BIS VM-3_ _ _	4 Read/write head BIS VM-3_ _ _
7/8" plug, 5-pin power	7/8" plug, 4-pin power	7/8" plug, 5-pin power
Configuration software	Configuration software	Configuration software
See Connectivity section for cable options	See Connectivity section for cable options	See Connectivity section for cable options

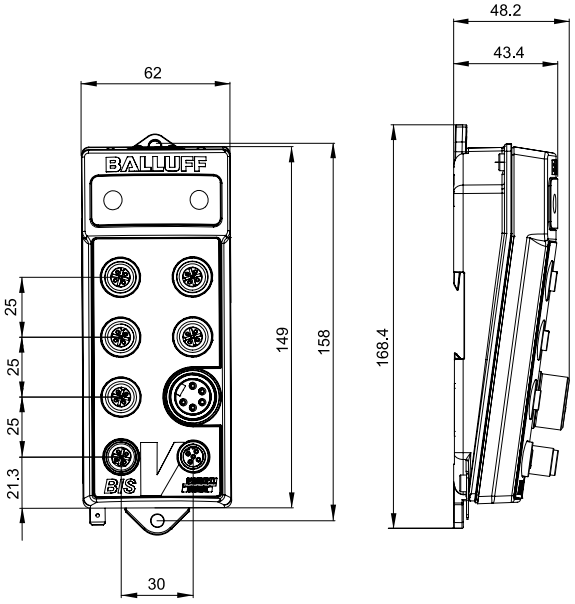

Communication module for easy loop®

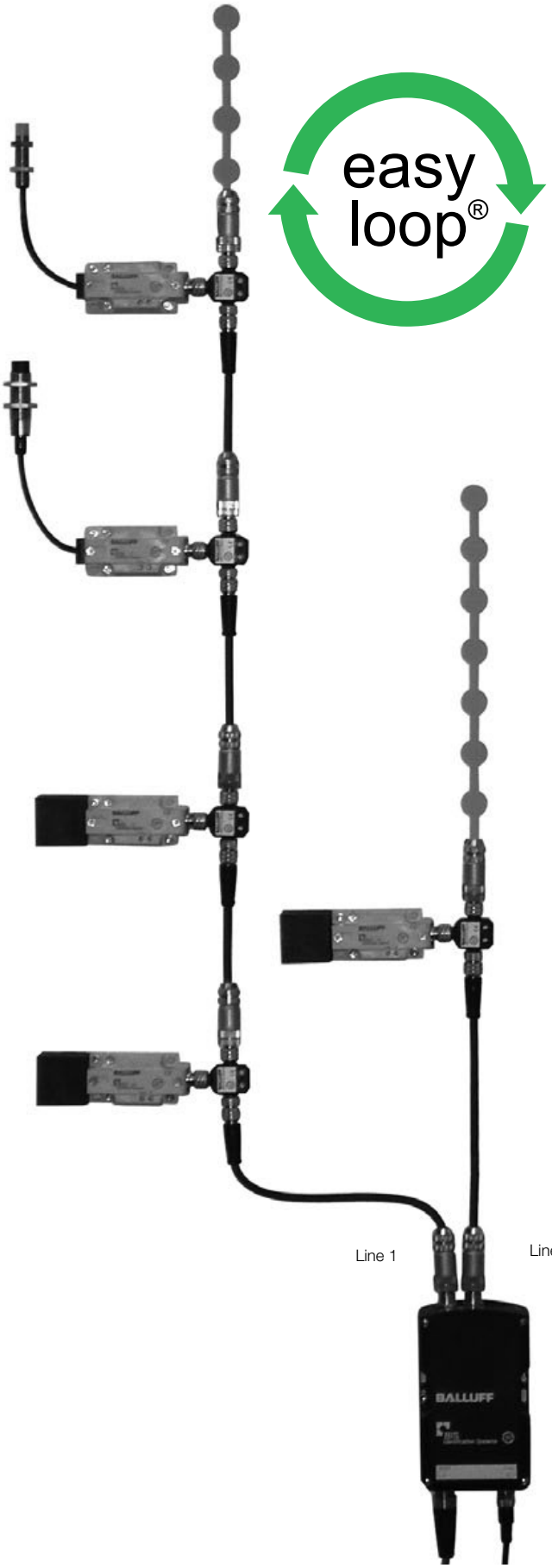

For simple installation
Use easy loop® to extend the BIS L system at minimal cost: compact read heads and the communication module for simple connection to the controller. Prefabricated cable and connectors for rapid, correct wiring. No address settings.
Install the BIS L simply by connecting a maximum of eight read heads with easy loop® interface to two lines.
A single cable will suffice and a separate power supply is no longer necessary.

All processor units function independently to allow dynamic operation: Data is transferred reliably when the data carrier passes by.

Maximum of 8 processor units on each line
All lines can be extended up to 80 m!

Terminator
BCC00TM
BKS-S117-RO1

Tee
BCC00TK
BKS-S115-TW2-03

Connection cables
BIS Z-501-PU-_ _

Line 1

Line 2

Communication module
RS232 or Ethernet

BIS L Industrial RFID System

Communication module for easy loop®

Description		Communication interface
RS232	**Ordering code**	**BAE003W**
	Part number	BIS Z-EL-002-RS232
Ethernet TCP/IP	**Ordering code**	**BAE003U**
	Part number	BIS Z-EL-001-Ethernet
Supply voltage, Ripple		24 V DC ±20 %, ≤ 10 %
Current		≤ 500 mA +50 mA for each connected read head
Operating temperature		0...+60 °C
Storage temperature		0...+60 °C
Protection per IEC 60529		IP 65
Read/write head ports		2 external
Connection for		read/write heads/Line 1 and 2, 2 connectors round 8-pin
Connection type		1 connector round 4-pin (power) 1 connector round 5-pin (bus)
Connection cable		See Connectivity section for cable options

Please order accessories separately

Tee
BCC00TK
BKS-S115-TW2-03

Terminator
BCC00TM
BKS-S117-RO1

Operating voltage
BCC00T8
BKS-S 79-00

Ethernet connector
BCC00WZ
BCC M474-0000-2D-000-51X475-000

RS-232 connector
BCC00PM
BIS C-522-PVC-02

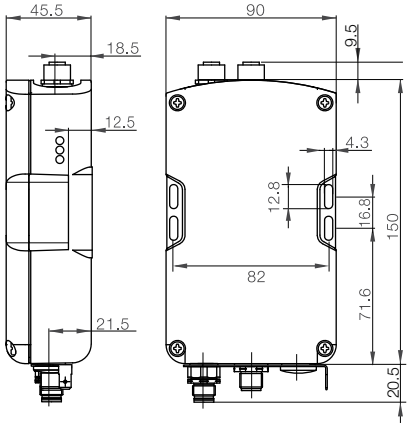

RS232 version shown

BIS L Industrial RFID System
Handheld

For enhanced operating convenience

Allows portable writing and reading of BIS L data carriers.
Easy operation thanks to
- Touchscreen with large color Windows CE® display and
- Pre-installed Balluff software and keyboard or stylus.

Ideal for poor light conditions and challenging environments. Data transfer via optional WLAN, Bluetooth or wired USB. The Handheld is also modular for expandability.

Additional convenience

A pistol grip is provided for ergonomic comfort.

Antenna type		
Function		
Housing material		
Standard base	**Ordering code**	
	Part number	
Standard + WLAN module	**Ordering code**	
	Part number	
Standard + 1D code reader	**Ordering code**	
	Part number	
Standard + 2D code reader	**Ordering code**	
	Part number	
Standard + ID code reader + WLAN	**Ordering code**	
	Part number	
Standard +2D code reader + WLAN	**Ordering code**	
	Part number	
Keyboard		
Display		
Supply voltage		
Capacity		
Interface		
Working temperature		
Degree of protection in accordance with IEC 60529		
Read/write head option		
Accessories included		
Appropriate data carrier		
Please order additional accessories separately		

Antenna type:

rod

round

Handheld Standard **BIS L-87_-1-008-x-000_**
Includes charger and stylus

Recommended accessories
(please order separately)

Description	Pistol grip option	Optional docking station with power supply	Replacement battery 4000mAh rechargeable battery
Part code	**FHW0004**	**FHW0003**	**WA3010**
Part number	11023836	11023834	162936

Handheld

	General purpose
	Read/write
	ABS
	BAE00J1
	BIS L-870-1-008-X-000-3000
	BIS L-870-1-008-X-001-3000
	BIS L-870-1-008-X-002-3000
	BIS L-870-1-008-X-003-3000
	BIS L-870-1-008-X-004-3000
	BIS L-870-1-008-X-005-3000
	52 buttons, alphanumeric
	TFT Touchscreen display
	3.7 V rechargeable battery pack
	4000 mA/h
	RS232/Balluff Dialog
	–10...+50 °C
	IP 65
	Integrated
	Charging power supply and stylus
	for BIS L-Data carrier with round coil Ø ≥ 35 mm
	Docking Station and Pistol Grip

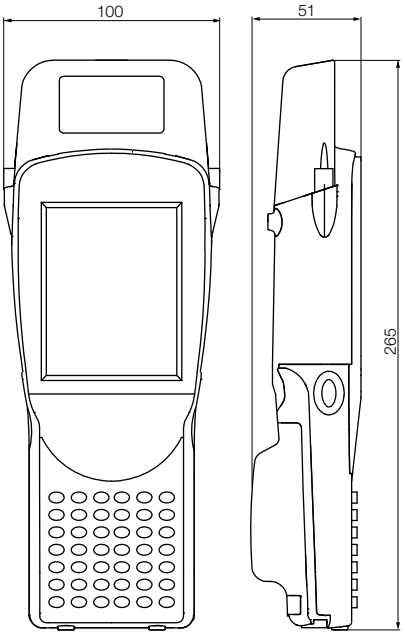

Access protection

And here's how it works

Individual access codes are allocated via programmable data keys, which can then be disabled to prevent further programming.

Unauthorized personnel cannot manipulate the data key as a result. The data key is read via an antenna fitted to a special bracket. The processor unit then issues the data.
Different interfaces such as serial, PROFIBUS, DeviceNet™, Ethernet/IP or parallel interfaces enable simple connection to the monitored system. Available for systems BIS C, BIS L and BIS M.

The benefits to you

Simple upgrade and rapid replacement without modifying the system software. End users are independent of system providers. The access system is easy to integrate in read/write stations that already use an identification system. Simply connect the access monitoring antenna to the second channel on the existing processor unit. Hardware expenses are reduced to a minimum and software only requires slight modification in order to process both channels.

Description	
Version	
Use	
Ordering code	
Part number	
Operating temperature	
Storage temperature	
Protection per IEC 60529	

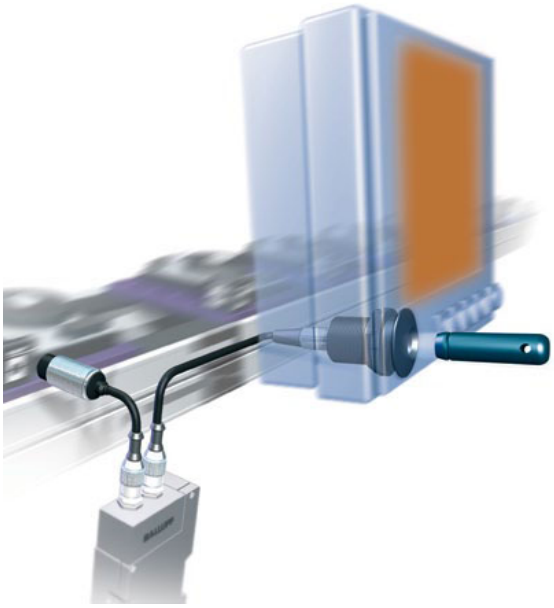

Tag Recepticle Access protection	Access Key Data carrier + Bracket	Tag Holder POM
Attachment for read/write head BIS M-304	Used with BIS Z-ZA-001	
BAM012N	**BIS00ZY**	**BAM012H**
BIS Z-ZA-001	BIS L-103-05/L-ZC1	BIS L-203-ZH1
0...+70 °C	–25...+70 °C	–25...+85 °C
–20...+85 °C	–25...+85 °C	
	IP 67	IP 67

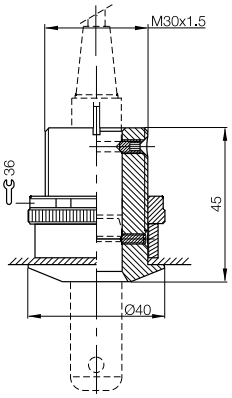

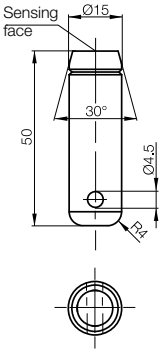

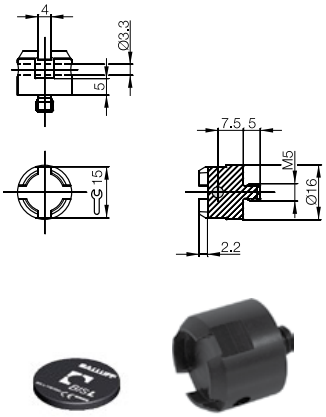

Interchangeable with data carriers BIS L-103 and BIS L-203, easy to mount – even on metal

The mount and prism clamp secure the data carrier and prevent it from falling out.

Electronic key for access control. Easy to implement using the "RFID key".

Mounting a data carrier

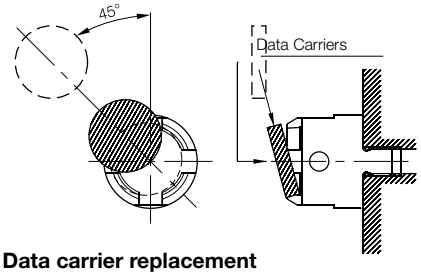

Data carrier replacement

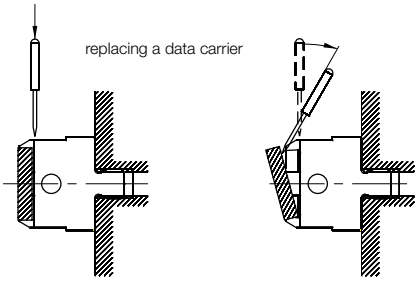

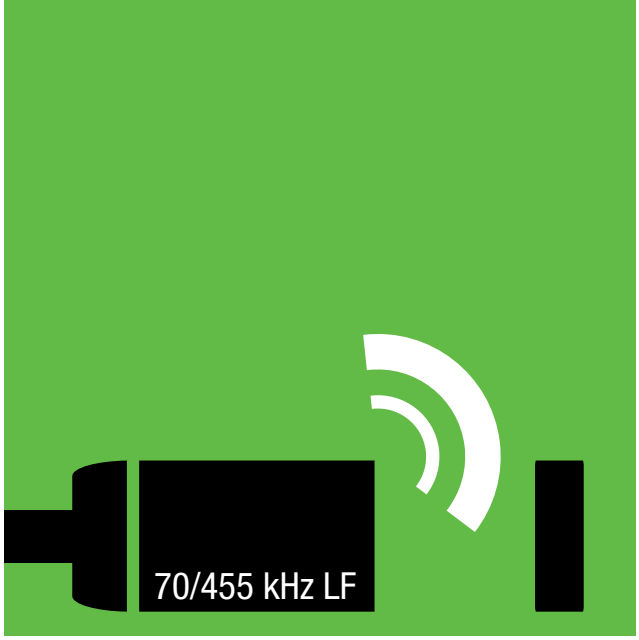

BIS C Industrial RFID System

Inductive Identification

The BIS C system uses a Dual Low Frequency 433KHz read and 70KHz write inductively coupled technology along with passive tags to provide short range RFID solutions up to 100mm for WIP (work in process) or production control such as palletized production or "on part" tracking and quality traceability applications. The BIS C system is also uniquely designed for solving machine tool identification applications. This system can be used flush in, on or off metal and provides hardened re-usable tagging options.

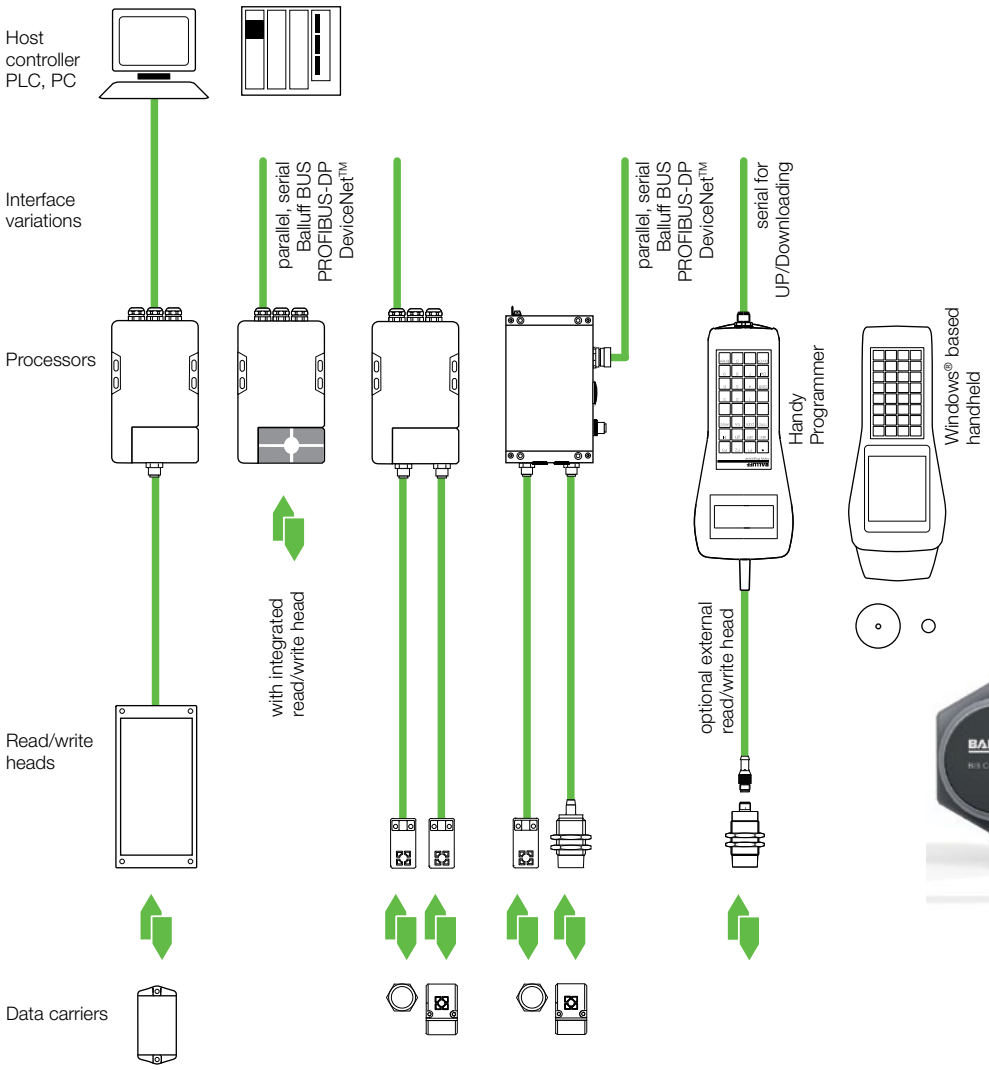

BIS C Industrial RFID System
Inductive identification

Range of applications	182
Selection criteria for read/write distances	184
Data carriers read/write – Tool ID	188
Data carriers read/write – Palletizing/Logistics	189
Data carriers read/write – Speciality	192
Read/write heads – Tool ID	194
Read/write heads – Palletizing/Logistics	196
Read/write heads	199
Read/write heads with connector	202
Read/write heads – Long Distances	204
Data couplers	208
8-bit processor for read-only mode – I/O Interface	210
Processors – Parallel	212
Processors – Serial	214
Processors – PROFIBUS-DP	216
Processors – DeviceNet™	220
Processors – EtherNet/IP™	224
Processors – Ethernet TCP/IP	225
Processors – PROFINET	226
Standard handheld	228
Handy programmer	236
Read/write gun	238
Accessories	239

70/455 kHz LF

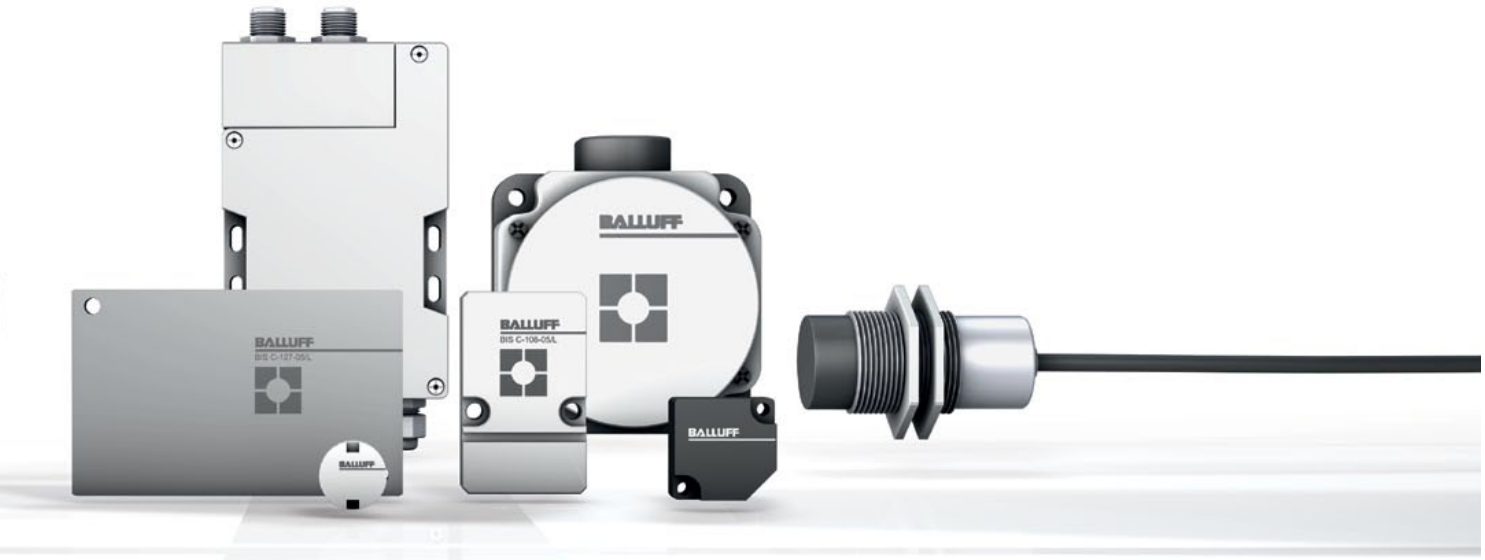

Technical information and definitions can be found on **page 354**

BIS C Industrial RFID System

Wide range of applications, many different variants

The versatile BIS C is ideal for a wide range of applications. Select the most suitable BIS C system for your application from the table.

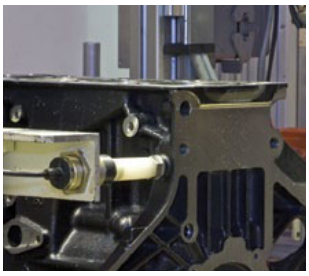

Data carrier		Page
BIS0002	BIS C-100-05/A	189
BIS0004	BIS C-103-05/A	188
BIS0006	BIS C-104-11/A	190
BIS0007	BIS C-104-32/A	190
BIS0009	BIS C-105-05/A	188
BIS000C	BIS C-108-05/L	190
BIS000H	BIS C-108-11/L	190
BIS000K	BIS C-108-32/L	190
BIS000F	BIS C-108-05/L-SA2	192
BIS000J	BIS C-108-11/L-SA2	192
BIS000M	BIS C-117-05/A	189
BIS000N	BIS C-117-05/L	189
BIS000R	BIS C-117-11/L	189
BIS000T	BIS C-121-04/L	188
BIS000W	BIS C-121-04/L-SA1	192
BIS0011	BIS C-122-04/L	188
BIS0015	BIS C-122-11/L	188
BIS0017	BIS C-127-05/L	190
BIS0019	BIS C-128-05/L	189
BIS001C	BIS C-128-11/L	189
BIS001E	BIS C-130-05/L	189
BIS001H	BIS C-130-05/L-SA1	192
BIS001Z	BIS C-133-05/L	193
	BIS C-133-11/L	193
BIS0020	BIS C-134-05/L-H120	193
BIS0021	BIS C-134-11/L	193
BIS00J4	BIS C-140-05/L-M6	193
BIS00J2	BIS C-140-05/L-M8	193
BIS00J3	BIS C-140-11/L-M6	193
BIS00J1	BIS C-140-11/L-M8	193
BIS0028	BIS C-150-05/A	191
BIS002A	BIS C-150-11/A	191
BIS002E	BIS C-150-32/A	191
BIS002K	BIS C-190-05/L	191
BIS002M	BIS C-190-11/L	191
BIS002N	BIS C-190-32/L	191
BIS002P	BIS C-191-05/L	191
BIS002R	BIS C-191-11/L	191

BIS C Industrial RFID System
Typical applications

	Tools		Production				Intralogistics						Access and object control												
	Data storage on machine tools		Tool and die management		Assembly conveying systems		Closed logistics circuits		Storage and retrieval equipment		Driverless vehicles		Object detection		Access and entry control										
	Tool holder collar	Retention knob	On tool	Dies	Pallets	On part	Retainer/workpiece carrier	Pallets	Retainer/workpiece carrier	Workpiece carrier skid	Guiding, steering	Identification	In component	On component	Reliable access control	Process access	Part ID	Read/write	Dynamic or static	Installation in metal	For harsh environments	Long distances (> 16 mm)	EEPROM	FRAM
	■		■			■	■						■					■		■	■		■	
	■	■		■	■	■	■	■										■	■	■	■		■	
					■			■	■	■								■	■	■	■		■	
					■			■	■	■								■	■	■	■			■
	■	■	■	■		■			■					■				■		■	■		■	
				■	■			■	■		■			■				■	■		■		■	
				■	■			■	■		■			■				■	■				■	
				■	■			■	■		■			■				■	■					■
					■		■	■										■	■		■		■	
					■		■	■										■	■		■		■	
				■	■			■		■		■						■	■	■	■		■	
				■	■			■		■		■						■	■				■	
				■	■			■		■		■						■	■				■	
	■		■			■									■		■	■		■	■		■	
					■			■	■								■	■					■	
	■	■	■			■									■		■	■		■	■		■	
	■	■	■			■									■		■	■		■	■		■	
										■	■							■	■		■	■	■	
				■	■	■	■	■						■				■	■		■		■	
				■	■	■	■	■						■				■	■		■		■	
			■		■		■	■	■								■	■	■		■		■	
			■		■		■	■						■			■	■	■		■		■	
					■		■	■										■	■		■		■	
					■		■	■										■	■		■		■	
				■	■		■	■										■	■		■		■	
				■	■		■	■										■	■		■		■	
			■	■		■	■		■								■	■	■	■	■		■	
			■	■		■	■		■								■	■	■	■	■		■	
			■	■		■	■		■								■	■	■	■	■		■	
			■	■		■	■		■								■	■	■	■	■		■	
					■			■		■	■							■	■		■	■	■	
					■			■		■	■							■	■		■	■	■	
					■			■		■	■							■	■		■	■		■
					■		■	■	■					■				■					■	
					■		■	■	■					■				■					■	
					■		■	■	■					■				■						■
					■		■	■	■					■				■					■	
					■		■	■	■					■				■					■	

70/455 kHz LF

Range of applications

Selection criteria

Data carriers read/write

Tool ID

Palletizing/ Logistics

Speciality

Read/write heads

Tool ID

Palletizing/ Logistics

Read/write heads

With connector

Long Distances

Data couplers

Processors

I/O Interface

Serial

Parallel

PROFIBUS-DP

DeviceNet™

EtherNet/IP™

Ethernet TCP/IP

PROFINET

Handheld

Handy programmer

Read/write gun

Accessories

BIS C Industrial RFID System

Selection criteria for read/write distances

How much data do you require?
How dynamic is your application?
Use the table and combine the BIS C components as you need them.

In three steps you will have selected your BIS C system:

1. First choose the appropriate form factor for your data carrier and
the associated read/write heads.
2. Then determine your read/write distance, which also depends on the speed of your system: the faster the data carrier moves, the closer the distance needs to be.
3. Finally determine the desired memory capacity. This will give you the maximum data security.

Questions?
Whatever your need, whether analysis, selection and return on investment, formats, interfaces and software, installation, disassembly and retrofitting – we are here to help you in every way.

Contact us to take advantage of our personal consultation, individual support and worldwide service.

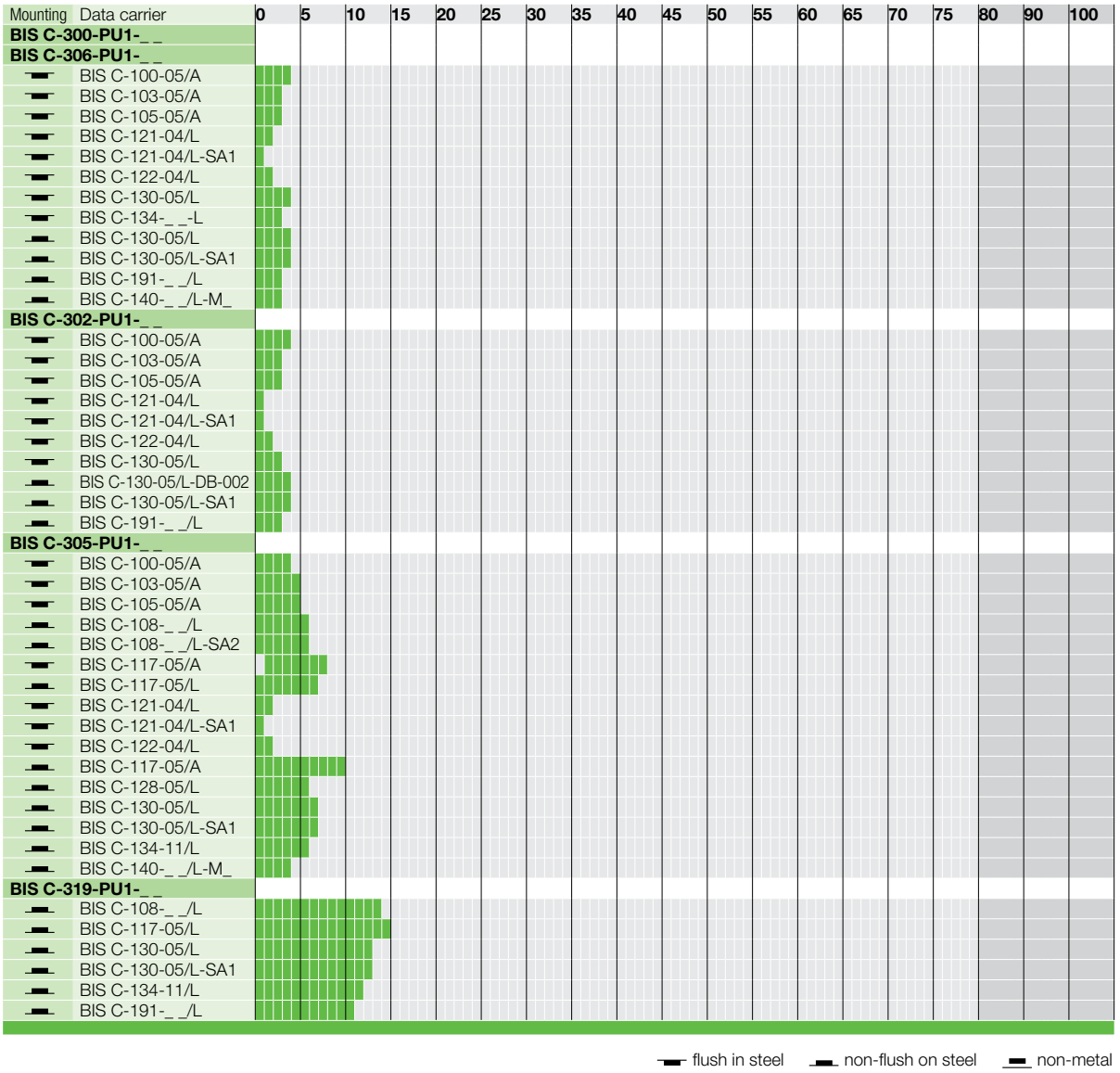

Selection criteria for read/write distances

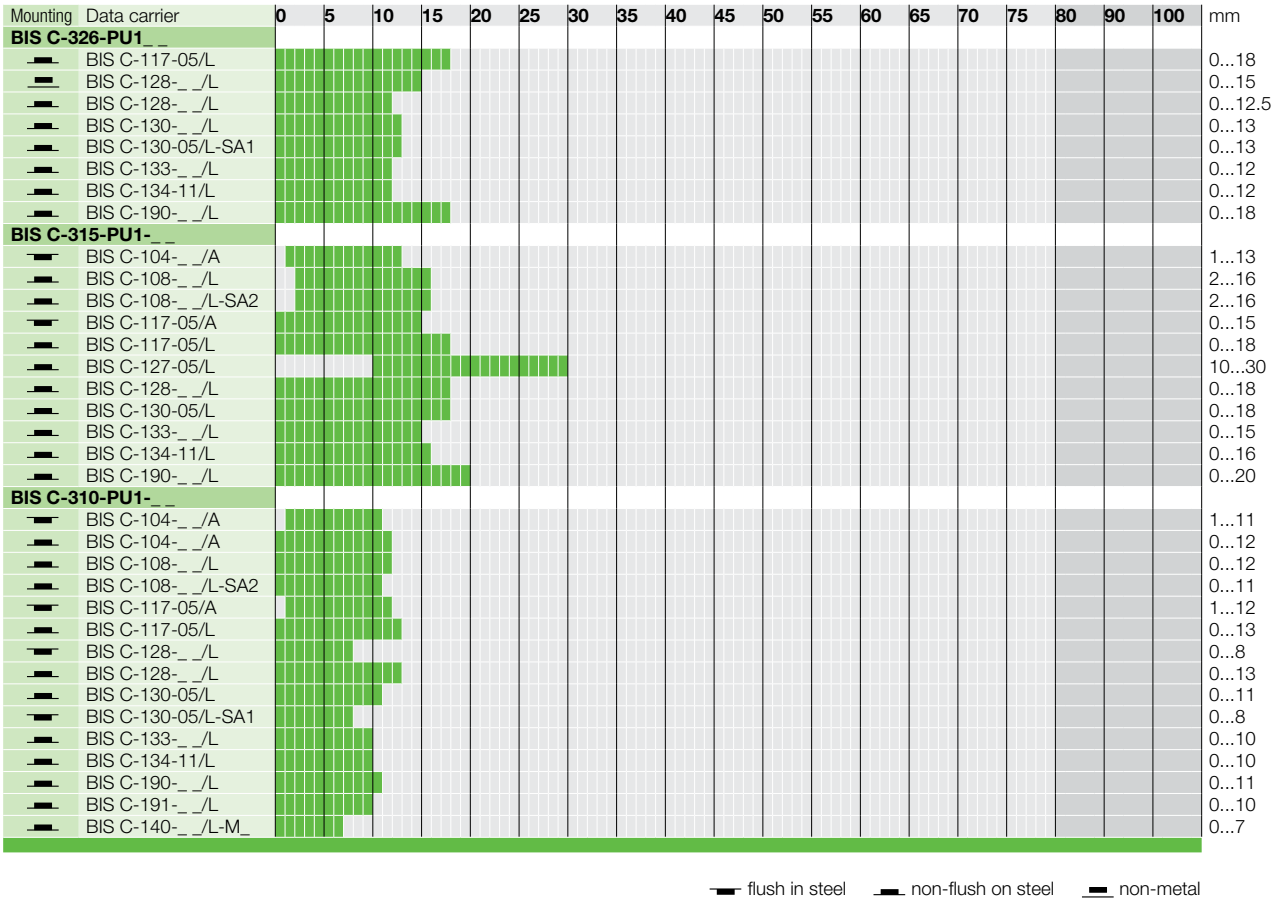

Selection criteria for read/write distances

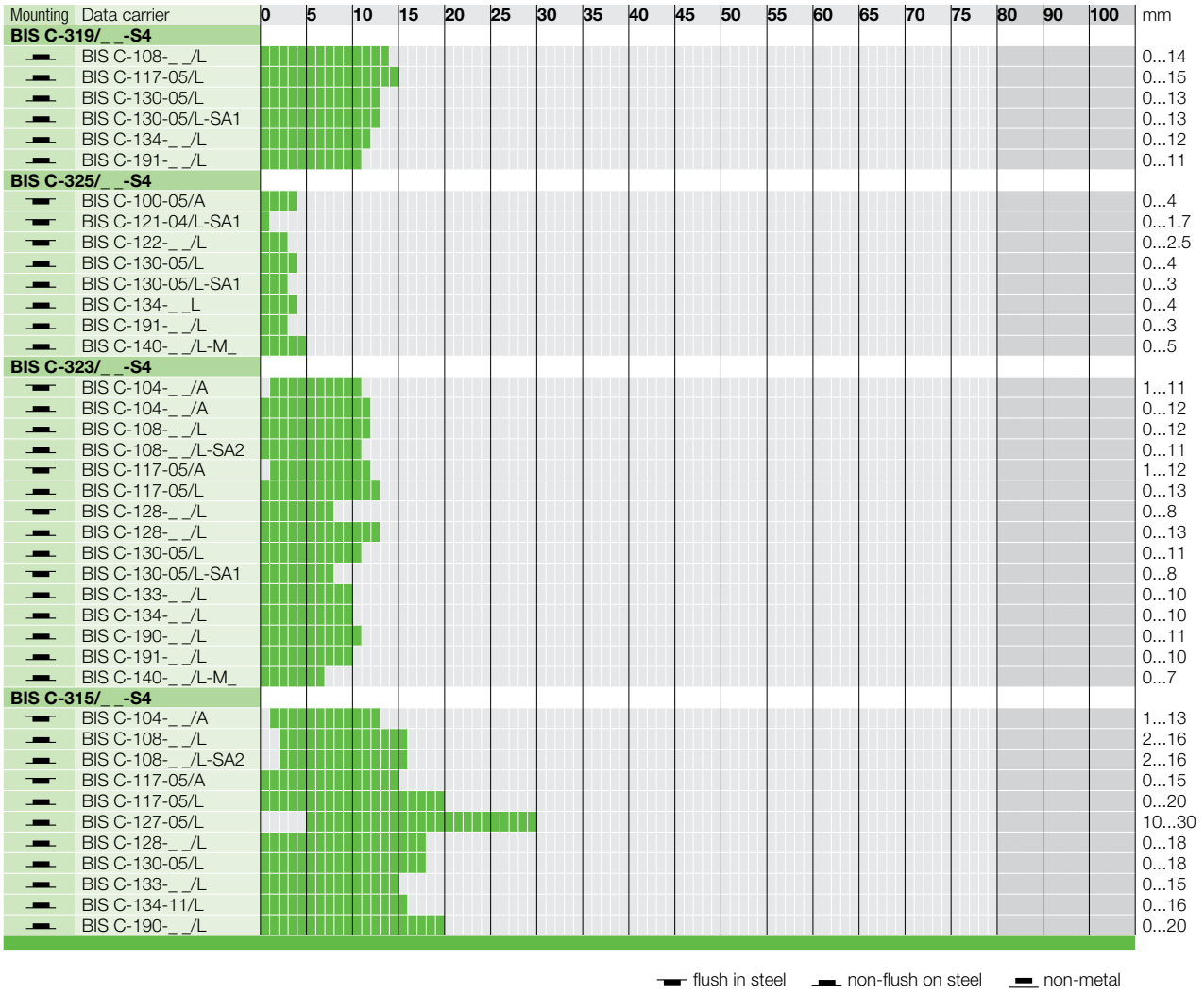

BIS C Industrial RFID System

Selection criteria for read/write distances

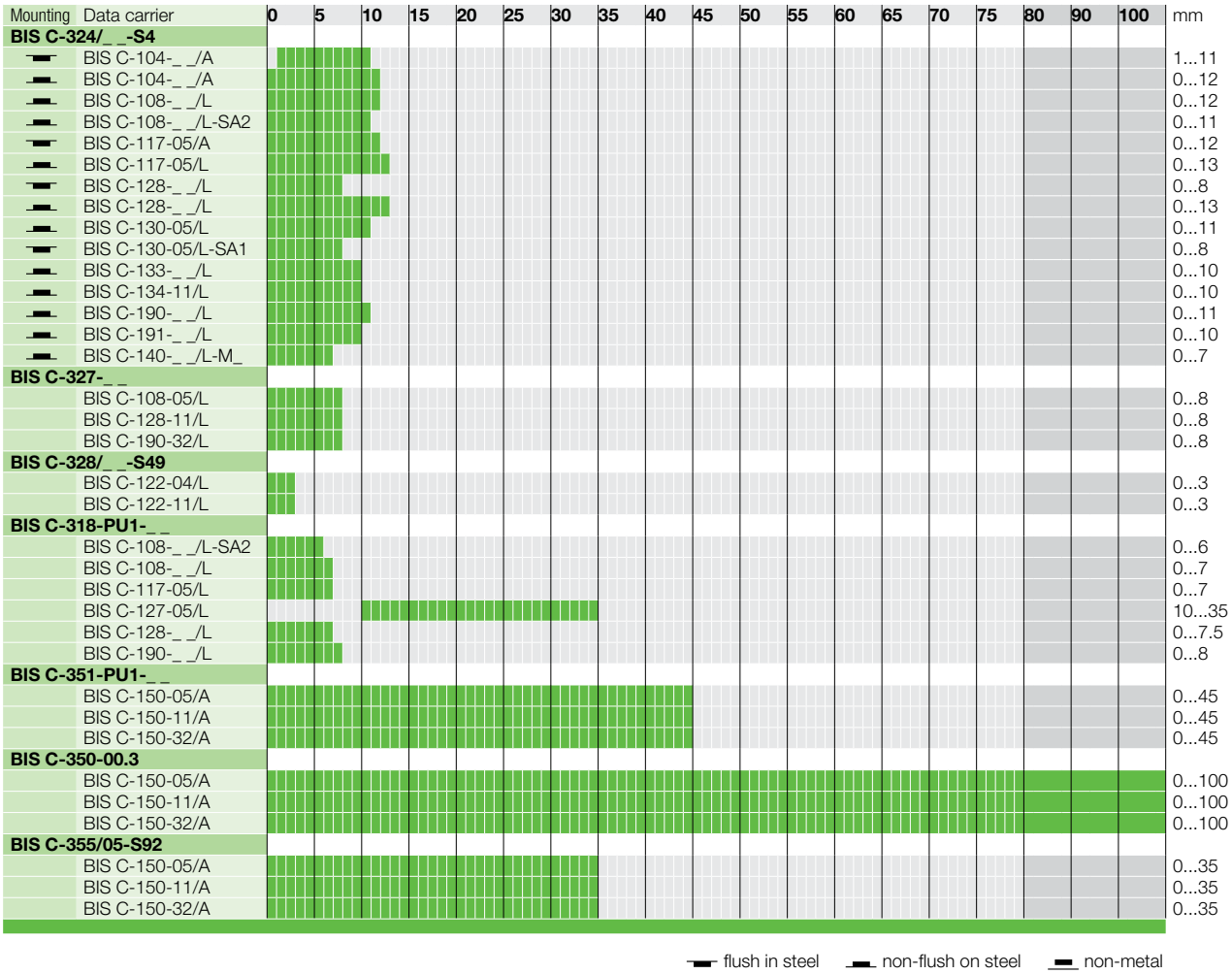

Dimensions		**Ø 9×4.5 mm**	**Ø 10×4.5 mm**	**Ø 12×8 mm**	**Ø 12×6 mm**
Housing material		EP	EP	EP	EP
Weight		0.5 g	0.7 g	1.8 g	1.2 g
BIS C Programmable					
511 bytes	**Ordering code**	**BIS000T**	**BIS0011**		
	Part number	BIS C-121-04/L	BIS C-122-04/L		
1023 bytes	**Ordering code**			**BIS0004**	**BIS0009**
	Part number			BIS C-103-05/A	BIS C-105-05/A
2047 bytes	**Ordering code**		**BIS0015**		
	Part number		BIS C-122-11/L		
8 Kbytes	**Ordering code**				
	Part number				
Operating temperature		0...+70 °C	0...+70 °C	–30...+70 °C	–30...+70 °C
Storage temperature		–30...+85 °C*	–30...+85 °C*	–30...+85 °C*	–30...+85 °C*
Protection per IEC 60529		IP 68	IP 68	IP 68	IP 68

Appropriate read/write head with max. read/write distance

Mounting								
BIS C-300	2 mm	3 mm	2,5 mm	3 mm	3,5 mm	4 mm	3,5 mm	4 mm
BIS C-302	1,5 mm	2,5 mm	2,0 mm	2,5 mm	3 mm	3,5 mm	3 mm	3,5 mm
BIS C-305	2 mm	3 mm	2,5 mm	3 mm	5 mm	6 mm	5 mm	6 mm
BIS C-306	2 mm	3 mm	2,5 mm	3 mm	3,5 mm	4 mm	3,5 mm	4 mm
BIS C-310								
BIS C-315								
BIS C-318								
BIS C-319								
BIS C-323								
BIS C-324								
BIS C-325	1,7 mm	3 mm	2,5 mm	3 mm	4,5 mm	5 mm	4,5 mm	5 mm
BIS C-326								
BIS C-327								
BIS C-328				3 mm				

For installation see technical section.

* also available for up to + 120 °C on request

Mounting (see technical section for details):

flush in steel

non-flush on steel

non-metal

Antenna type:

rod

round

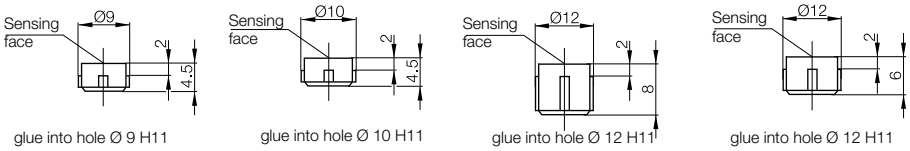

DIN 69 873

BIS C Industrial RFID System

Data carriers read/write

Ø 16×7 mm	**Ø 16×10.5 mm**	**Ø 26×6 mm**	**Ø 30×16 mm**	**Ø 30×16 mm**
EP	PA 66	EP	PBT	PBT
2 g	3 g	6 g	23 g	5.5 g
BIS001E	**BIS0002**	**BIS0019**	**BIS000M**	**BIS000N**
BIS C-130-05/L	BIS C-100-05/A	BIS C-128-05/L	BIS C-117-05/A	BIS C-117-05/L
		BIS001C		**BIS000R**
		BIS C-128-11/L		BIS C-117-11/L
–30...+70 °C	0...+70 °C	–20...+70 °C	–30...+70 °C	–30...+70 °C
–30...+85 °C*	–20...+85 °C	–30...+85 °C*	–30...+85 °C	–30...+85 °C
IP 68	IP 68	IP 68	IP 68	IP 68

4 mm	4 mm	4 mm	4 mm						
		4 mm	4 mm						
6 mm	7 mm	4 mm	4 mm	3,5 mm**	6 mm**	8 mm	10 mm		7 mm
4 mm	4 mm	4 mm	4 mm						
	11 mm			8 mm	3 mm	2 mm	13 mm		13 mm
	18 mm				18 mm	15 mm	22 mm		20 mm
					7,5 mm				7 mm
6 mm	13 mm				14 mm	13 mm	16 mm	8 mm	15 mm
	11 mm			8 mm	13 mm	12 mm	13 mm		13 mm
				8 mm	13 mm	12 mm	13 mm		13 mm
4 mm	5 mm	4 mm	4 mm						
	13 mm				15 mm				18 mm
					8 mm				

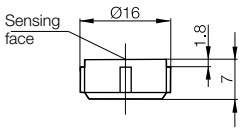

glue into hole Ø 16 H11

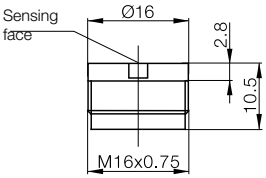

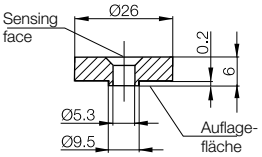

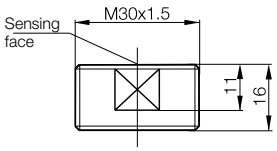

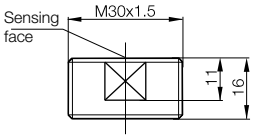

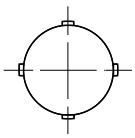

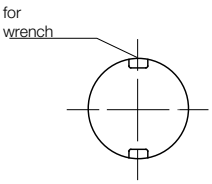

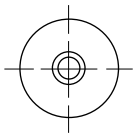

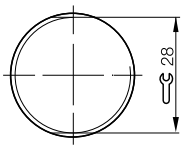

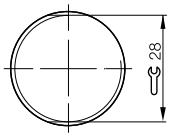

Compatible screws for
BIS C-128-... data carriers:
DIN EN ISO 2009 M5
(countersunk slot head screw)
DIN EN ISO 7046-1 M5
(countersunk Philips head screw)
Screw tightening torque 2.5 Nm

**BIS C-305, only if BIS C-128_
_ is attached using plastic screw.

Installation tool 710691
for BIS C-100-05/A data carrier please order separately!

Dimensions	**Ø 30×35 mm**	**52×32×11 mm**	**85×53×4.5 mm**
Housing material	Nickel plated brass	PBT	ABS
Weight	54 g	28 g	30 g

BIS C Programmable

511 bytes	**Ordering code**			
	Part number			
1023 bytes	**Ordering code**		**BIS000C**	**BIS0017**
	Part number		BIS C-108-05/L	BIS C-127-05/L
2047 bytes	**Ordering code**	**BIS0006**	**BIS000H**	
	Part number	BIS C-104-11/A	BIS C-108-11/L	
8 Kbytes	**Ordering code**	**BIS0007**	**BIS000K**	
	Part number	BIS C-104-32/A	BIS C-108-32/L	
Operating temperature		–30...+70 °C	–30...+70 °C	0...+60 °C
Storage temperature		–30...+85 °C	–30...+85 °C	–20...+60 °C
Protection per IEC 60529		IP 67	IP 68	IP 65

Appropriate read/write head with max. read/write distance

Mounting						
BIS C-300						
BIS C-305				6 mm		
BIS C-306						
BIS C-310	11 mm	12 mm	5 mm	12 mm		
BIS C-315	13 mm	14 mm	10 mm	16 mm		30 mm
BIS C-318				7 mm		25 mm
BIS C-319			11 mm	14 mm		
BIS C-323	11 mm	12 mm		12 mm		
BIS C-324	11 mm	12 mm		12 mm		
BIS C-325						
BIS C-326						
BIS C-327				8 mm		
BIS C-350						
BIS C-351						

For installation see technical section.

Mounting (see technical section for details):

flush in steel

non-flush on steel

non-metal

Antenna type:

rod

round

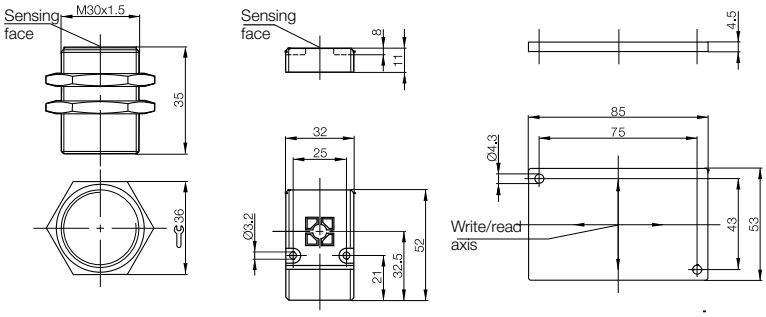

Screw tightening torque 40 Nm

Data carriers read/write

80×40×22 mm	**34×34 mm**	**12.5×12.5 mm**
POM	PBT	PBT
75 g	29 g	10 g

BIS0028	**BIS002K**	**BIS002P**
BIS C-150-05/A	BIS C-190-05/L	BIS C-191-05/L
BIS002A	**BIS002M**	**BIS002R**
BIS C-150-11/A	BIS C-190-11/L	BIS C-191-11/L
BIS002E	**BIS002N**	
BIS C-150-32/A	BIS C-190-32/L	
–30...+70 °C	–30...+70 °C	–30...+70 °C
–30...+85 °C	–30...+85 °C	–30...+85 °C
IP 68	IP 68	IP 68

						3,5 mm
						3,5 mm
				11 mm		10 mm
				20 mm		
				8 mm		
						11 mm
				11 mm		10 mm
				11 mm		10 mm
						3,5 mm
				18 mm		
				8 mm		
		100 mm				
		50 mm				

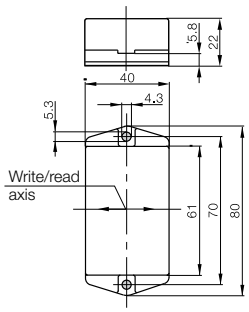

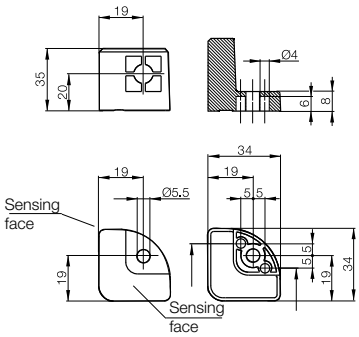

Screw tightening torque 1.5 Nm, anti-torquing installation provided by straight pin Ø 4 mm according to DIN EN 22338; DIN EN 28734

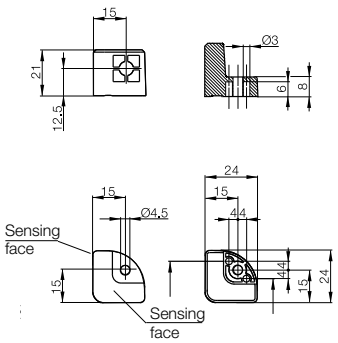

Screw tightening torque 1.5 Nm, anti-torquing installation provided by straight pin Ø 3 mm according to DIN EN 22338; DIN EN 28734

Caution!
Reading or writing can be performed on one active surface as desired.

Dimensions	**Ø 11×13 mm**	**Ø 15.5×7 mm**	**52×32×11 mm**
Housing material	Glass	PBT	PBT
Weight	0.9 g	28 g	28 g

BIS C Programmable

511 bytes	**Ordering code**	**BIS000W**		
	Part number	BIS C-121-04/L-SA1		
1023 bytes	**Ordering code**		**BIS001H**	**BIS000F**
	Part number		BIS C-130-05/L-SA1	BIS C-108-05/L-SA2
2047 bytes	**Ordering code**			**BIS000J**
	Part number			BIS C-108-11/L-SA2
8 Kbytes	**Ordering code**			
	Part number			
Operating temperature		+10...+70 °C	–30...+70 °C	–30...+70 °C
Storage temperature		+10...+126 °C	–30...+85 °C	–30...+85 °C*
Protection per IEC 60529		IP 68	IP 68	IP 68

Appropriate read/write head with max. read/write distance

Mounting				
BIS C-300	1,2 mm	4 mm	4 mm	
BIS C-302	0,7 mm			
BIS C-305	1,2 mm	6 mm	7 mm	6 mm
BIS C-306	1,2 mm	4 mm	4 mm	
BIS C-310	1,7 mm	8 mm	11 mm	4 mm / 11 mm
BIS C-315				10 mm / 16 mm
BIS C-318				6 mm
BIS C-319		7 mm	13 mm	
BIS C-323		8 mm	11 mm	4 mm / 11 mm
BIS C-324		8 mm	11 mm	4 mm / 11 mm
BIS C-325		4 mm	5 mm	
BIS C-326			13 mm	12 mm
Suitable for	use in autoclaves	use in vacuum		use in vacuum

For installation see technical section.

*also available for up to + 120 °C on request

Mounting (see technical section for details):

flush in steel

non-flush on steel

non-metal

Antenna type:

rod

round

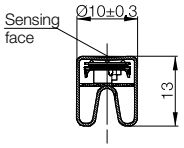

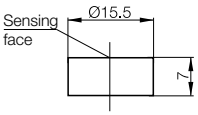

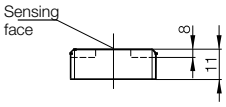

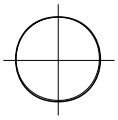

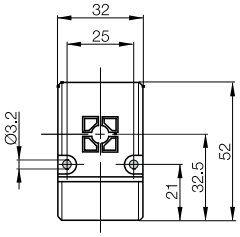

25×25 mm	**Ø 60×21 mm**	**Ø 22×21 mm**	**Ø 22x21 mm**
PA 66-GF30	POM	steel, coated	steel, coated
9 g	85 g	18 g	18 g

BIS0020	**BIS001Z**	**BIS00J2**	**BIS00J4**
BIS C-134-05/L-H120	BIS C-133-05/L	BIS C-140-05/L-M8	BIS C-140-05/L-M6
BIS0021		**BIS00J1**	**BIS00J3**
BIS C-134-11/L	BIS C-133-11/L	BIS C-140-11/L-M8	BIS C-140-11/L-M6
–30...+70 °C	–30...+70 °C	–30...+70 °C	–30...+70 °C
–30...+85 °C*	–30...+85 °C	–30...+85 °C	–30...+85 °C
IP 68	IP 68	IP 68 / 69K	IP 68 / 69K

3 mm				3 mm		3 mm	
	6 mm			4,5 mm		4,5 mm	
3 mm				3 mm		3 mm	
	10 mm	10 mm	10 mm	7 mm		7 mm	
	16 mm	15 mm	15 mm				
	12 mm						
	10 mm	10 mm	10 mm	7 mm		7 mm	
	10 mm	10 mm	10 mm	7 mm		7 mm	
	4 mm			5 mm		5 mm	
	12 mm	12 mm	12 mm				
use in vacuum		use in vacuum		use in vacuum		use in vacuum	

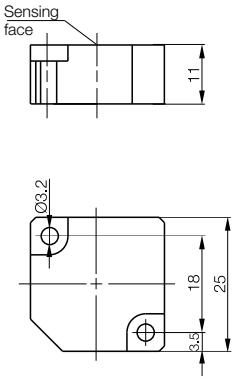

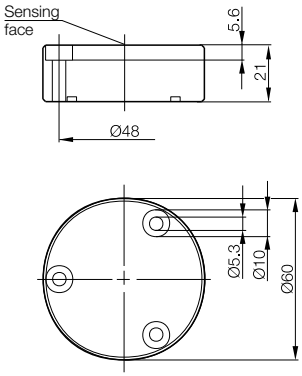

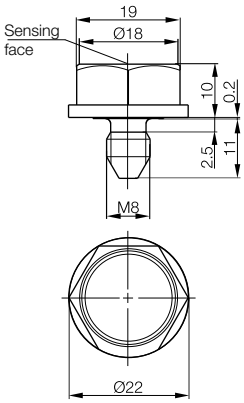

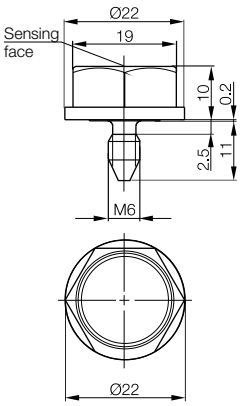

Read/write heads

Dimensions		**Ø 14.5**	**M16**
Housing material		CuZn	CuZn
1 m cable	**Ordering code**	**BIS00P5**	**BIS00PC**
	Part number	BIS C-300-PU1-01	BIS C-306-PU1-01
5 m cable	**Ordering code**	**BIS005Z**	**BIS006F**
	Part number	BIS C-300-PU1-05	BIS C-306-PU1-05
10 m cable	**Ordering code**	**BIS00P6**	**BIS00PE**
	Part number	BIS C-300-PU1-10	BIS C-306-PU1-10
Mounting			
Operating temperature		0...+70 °C	
Storage temperature		–20...+85 °C	
Protection per IEC 60529		IP 67	
Connection to		Processor	
Connection cable		Cable included	

Appropriate data carrier		**BIS0002** BIS C-100-05/A	**BIS0004** BIS C-103-05/A	**BIS0009** BIS C-105-05/A	**BIS000T** BIS C-121-04/L	**BIS000W** BIS C-121-04/L-SA1	**BIS0011** BIS C-122-04/L	**BIS001E** BIS C-130-05/L	**see data carriers** BIS C-134-_ _-L	**BIS001E** BIS C-130-05/L	**BIS001H** BIS C-130-05/L-SA1	**see data carriers** BIS C-191-_ _/L	**see data carriers** BIS C-140-_ _/L-M_
Mounting													
Write distance in mm		0-4	0-3,5	0-3,5	0-2	0-1,2	0-2,5	0-4	0-3	0-4	0-4	0-3,5	0-3
Read distance in mm		0-4	0-3,5	0-3,5	0-2	0-1,2	0-2,5	0-4	0-3	0-4	0-4	0-3,5	0-3
Offset in mm at distance	0.7 mm					±2							
	1 mm	±3	±3	±3	±2		±2,5	±3,5	±4	±5	±5	±4	±3,5
	3 mm	±2	±2	±2				±3		±4	±4	±3	±2

Caution!
At 10 m cable length, read/write distance is reduced by 10 %

See technical section for dynamic mode information.

Mounting (see technical section for details):

flush in steel

non-flush on steel

non-metal

Antenna type:

rod

round

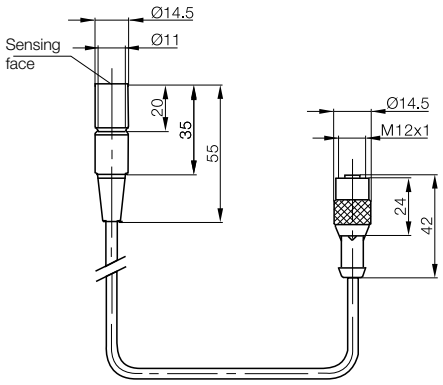

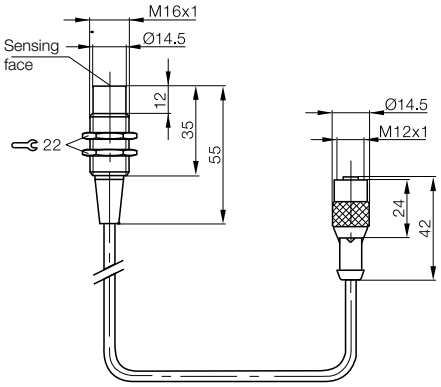

Handle
Ordering code: BAM012A
Part number: BIS C-300-HG1
for read/write head BIS C-300-_ _
Material: POM
See accessories section for details.

BIS C Industrial RFID System

Read/write heads

	34x33x61.5 mm
	AlMg3/PA 66
	BIS00PA
	BIS C-302-PU1-05
	BIS00P9
	BIS C-302-PU1-10
	0...+70 °C
	–20...+85 °C
	IP 67
	Processor
	Cable included

BIS0002 BIS C-100-05/A	**BIS0004** BIS C-103-05/A	**BIS0009** BIS C-105-05/A	**BIS000T** BIS C-121-04/L	**BIS000W** BIS C-121-04/L-SA1	**BIS0011** BIS C-122-04/L	**BIS001E** BIS C-130-05/L	**BIS0031** BIS C-130-05/L-DB-002	**BIS001H** BIS C-130-05/L-SA1	**see data carriers** BIS C-191-_ _/L
0-4	0-3	0-3	0-1,5	0-0,7	0-2	0-3,5	0-4	0-4	0-3
0-4	0-3	0-3	0-1,5	0-0,7	0-2	0-3,5	0-4	0-4	0-3
				±1					
±3	±3	±3	±1,5		±2	±3	±5	±5	±4
±2	±1,5	±1,5				±2	±3	±3	±2

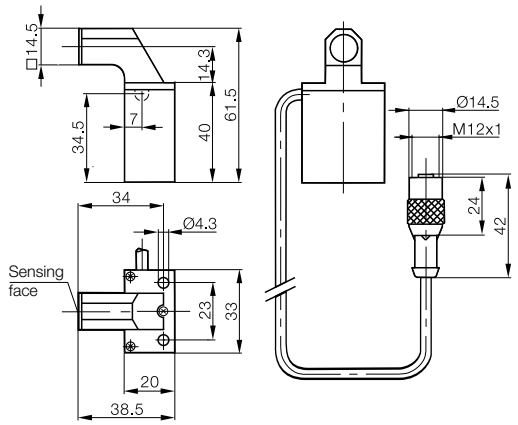

Example:

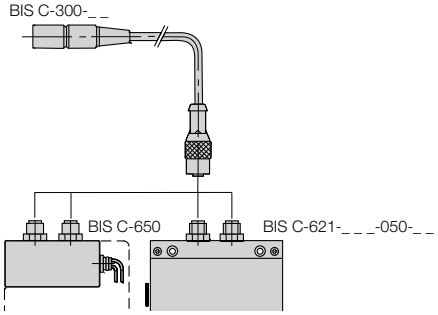

Cables on read/write heads must not be shortened, since functionality can then no longer be ensured.

Dimensions		**50×25×10 mm**
Housing material		ABS-GF16
1 m cable	**Ordering code**	**BIS0066**
	Part number	BIS C-305-PU1-01
5 m cable	**Ordering code**	**BIS0067**
	Part number	BIS C-305-PU1-05
10 m cable	**Ordering code**	**BIS0068**
	Part number	BIS C-305-PU1-10
Mounting		▬
Operating temperature		0...+70 °C
Storage temperature		–20...+85 °C
Protection per IEC 60529		IP 67
Connection to		Processor
Connection cable		Cable included

Appropriate data carrier		**BIS0002** BIS C-100-05/A	**BIS0004** BIS C-103-05/A	**BIS0009** BIS C-105-05/A	**see data carriers** BIS C-108-_ _/L	**see data carriers** BIS C-108-_ _/L-SA2	**BIS000M** BIS C-117-05/A	**BIS000N** BIS C-117-05/L	**BIS000T** BIS C-121-04/L	**BIS000W** BIS C-121-04/L-SA1	**BIS0011** BIS C-122-04/L	**BIS000M** BIS C-117-05/A	**BIS0019** BIS C-128-05/L	**BIS001E** BIS C-130-05/L	**BIS001H** BIS C-130-05/L-SA1	**BIS0021** BIS C-134-11/L	**see data carriers** BIS C-140-_ _/L-M_
Mounting		▬	▬	▬	▬	▬	▬	▬	▬	▬	▬	▬	▬	▬	▬	▬	▬
Write distance in mm		0-4	0-5	0-5	0-6	0-6	1-8	0-7	0-2	0-1,2	0-2,5	0-10	0-6	0-7	0-7	0-6	0-4,5
Read distance in mm		0-4	0-5	0-5	0-6	0-6	1-8	0-7	0-2	0-1,2	0-2,5	0-10	0-6	0-7	0-7	0-6	0-4,5
Offset in mm at distance	0.7 mm									±2							
	1 mm	±3	±4	±4	±8	±8	±5	±8,5	±2		±3	±6	±8	±5	±5	±5	±4,5
	3 mm	±2	±3	±3	±7	±7	±4	±7,5			±2	±6	±7	±5	±5	±5	±3,5
	5 mm				±5	±5	±3	±6				±6	±5	±4	±4	±4	
	7 mm						±2	±4				±5		±2	±2		
	10 mm											±3					

Caution!
At 10 m cable length, read/write distance is reduced by 10 %

See technical section for dynamic mode information.

Mounting (see technical section for details):

▬ flush in steel

▬ non-flush on steel

▬ non-metal

Antenna type:

▬ rod

● round

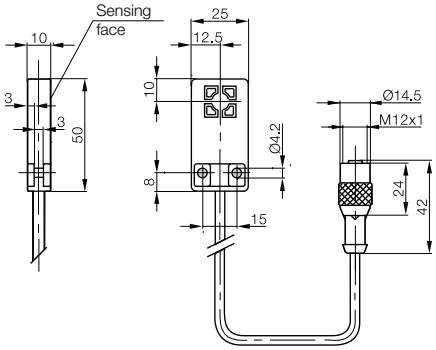

Data coupler BIS C-380-...
for data transmission between data carriers BIS C-1_ _ and read/write head BIS C-3_ _ via a contactless extension page 196/197.

Read/write heads

M18	**M30**
PBT	PVDF
BIS0077	
BIS C-319-PU1-01	
BIS0078	**BIS007Y**
BIS C-319-PU1-05	BIS C-326-PU1-05
BIS0079	**BIS007Z**
BIS C-319-PU1-10	BIS C-326-PU1-10
—	—
0...+70 °C	0...+70 °C
–20...+85 °C	–20...+85 °C
IP 67	IP 67
Processor	Processor
Cable included	Cable included

see data carriers BIS C-108-_ _/L	**BIS000N** BIS C-117-05/L	**BIS001E** BIS C-130-05/L	**BIS001H** BIS C-130-05/L-SA1	**BIS0021** BIS C-134-11/L	**see data carriers** BIS C-191-_ _/L	**BIS000N** BIS C-117-05/L	**see data carriers** BIS C-128-_ _/L	**see data carriers** BIS C-128-_ _/L	**see data carriers** BIS C-130-_ _/L	**BIS001H** BIS C-130-05/L-SA1	**see data carriers** BIS C-133-_ _/L	**BIS0021** BIS C-134-11/L	**see data carriers** BIS C-190-_ _/L
—	—	—	—	—	—	—	—	—	—	—	—	—	—
0-14	0-15	0-13	0-13	0-12	0-11	0-18	0-15	0-12,5	0-13	0-13	0-12	0-12	0-18
0-14	0-15	0-13	0-13	0-12	0-11	0-18	0-15	0-12,5	0-13	0-13	0-12	0-12	0-18
±12	±13	±9	±9	±9	±9	±15	±14	±13	±12	±12	±14	0-12	±17
±12	±12	±9	±9	±9	±9	±15	±14	±12	±12	±12	±14	0-12	±17
±11	±12	±9	±9	±9	±9	±15	±14	±12	±10	±10	±14	±10	±17
±11	±11	±8,5	±8,5	±8,5	±8	±14	±14	±11	±10	±10	±8,5	±10	±16
±9	±10	±7,5	±7,5	±7		±11	±8,5	±8					±14

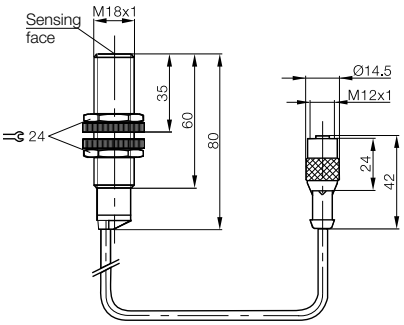

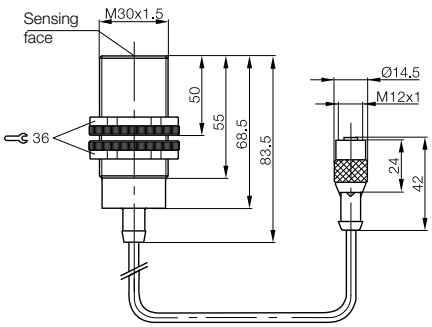

Example:

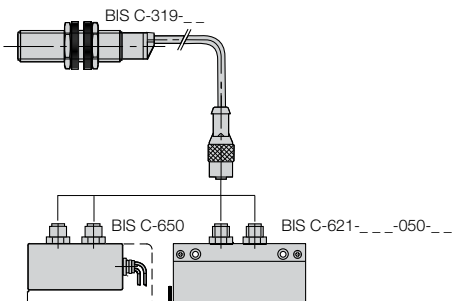

Cables on read/write heads must not be shortened, since functionality can then no longer be ensured.

Read/write heads

Dimensions		**80×80×40 mm**
Housing material		PBT
1 m cable	**Ordering code**	**BIS00PK**
	Part number	BIS C-315-PU1-01
5 m cable	**Ordering code**	**BIS00PL**
	Part number	BIS C-315-PU1-05
10 m cable	**Ordering code**	**BIS00PM**
	Part number	BIS C-315-PU1-10
Mounting		
Operating temperature		0...+70 °C
Storage temperature		–20...+85 °
Protection per IEC 60529		IP 67
Connection to		Processor
Connection cable		Cable included

Appropriate data carrier		**see data carriers** BIS C-104-_/A	**see data carriers** BIS C-108-_/L	**see data carriers** BIS C-108-_/L-SA2	**BIS000M** BIS C-117-05/A	**BIS000N** BIS C-117-05/L	**BIS0017** BIS C-127-05/L	**see data carriers** BIS C-128-_/L	**BIS001E** BIS C-130-05/L	**see data carriers** BIS C-133-_/L	**BIS0021** BIS C-134-11/L	**see data carriers** BIS C-190-_/L
Mounting												
Write distance in mm		1-13	2-16	2-16	0-15	0-18	10-30	0-18	0-18	0-15	0-16	0-20
Read distance in mm		1-13	2-16	2-16	0-15	0-18	10-30	0-18	0-18	0-15	0-16	0-20
Offset in mm at distance	0.7 mm											
	1 mm	±15	±15		±15	±17		±17	±16	±17	±16	±18
	3 mm	±14	±14	±15	±15	±17		±17	±16	±15	±16	±18
	5 mm	±11	±12	±12	±14	±17		±17	±16	±15	±16	±18
	7 mm	±10	±11	±10	±12	±15		±15	±14	±14	±14	±18
	10 mm	±8	±8	±8	±12	±15	±30	±15	±14	±14	±12	±18
	15 mm					±14	±27	±14	±11			±16
	20 mm						±20					

Caution!
At 10 m cable length, read/write distance is reduced by 10 %

See technical section for dynamic mode information.

Mounting (see technical section for details):

flush in steel

non-flush on steel

non-metal

Antenna type:

rod

round

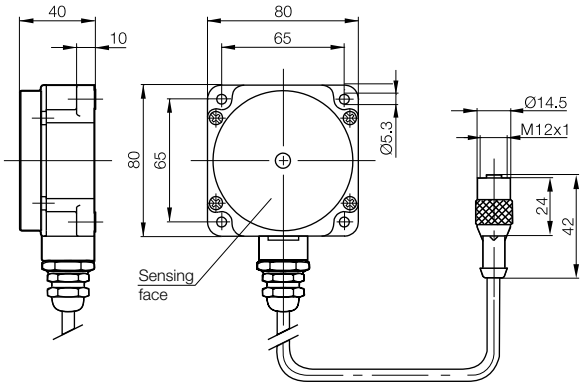

Read/write heads

M30														
Nickel plated brass														
BIS00PF														
BIS C-310-PU1-01														
BIS00PH														
BIS C-310-PU1-05														
BIS00PJ														
BIS C-310-PU1-10														
0...+70 °C														
–20...+85 °C														
P 67														
Processor														
Cable included														

see data carriers BIS C-104-_ _/A	**see data carriers** BIS C-104-_ _/A	**see data carriers** BIS C-108-_ _/L	**see data carriers** BIS C-108-_ _/L-SA2	**BIS000M** BIS C-117-05/A	**BIS000N** BIS C-117-05/L	**see data carriers** BIS C-128-_ _/L	**see data carriers** BIS C-128-_ _/L	**BIS001E** BIS C-130-05/L	**BIS001H** BIS C-130-05/L-SA1	**see data carriers** BIS C-133-_ _/L	**BIS0021** BIS C-134-11/L	**see data carriers** BIS C-190-_ _/L	**see data carriers** BIS C-191-_ _/L	**see data carriers** BIS C-140-_ _/L-M_
1-11	0-12	0-12	0-11	1-12	0-13	0-8	0-13	0-11	0-8	0-10	0-10	0-11	0-10	0-7
1-11	0-12	0-12	0-11	1-12	0-13	0-8	0-13	0-11	0-8	0-10	0-10	0-11	0-10	0-7
±7,5	±7,5	±10	±10	±7,5	±11	±8	±10	±9	±6,5	±10	±9	±10	±8	±5,5
±7	±7	±9	±9	±7,5	±10	±7	±10	±8	±6	±9	±8	±9	±7,5	±5
±7	±7	±9	±8,5	±7	±10	±6,5	±9	±7	±5,5	±9	±7	±9	±7	±4
±7	±7	±8,5	±7,5	±6,5	±9,5	±5,5	±9	±5		±7	±4	±8	±6,5	
												±6,5		

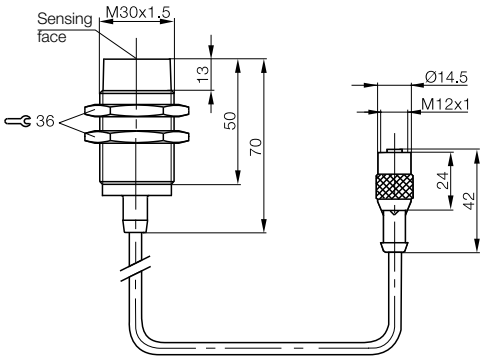

Example:

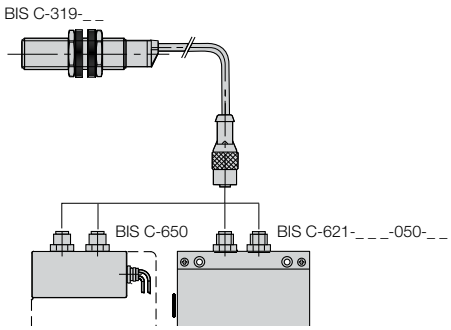

Cables on read/write heads must not be shortened, since functionality can then no longer be ensured.

BIS C Industrial RFID System

Read/write heads

Dimensions		**M18**	**M18**
Housing material		PBT	X6CrNiMoTi 17-12-2
for 1 m cable	**Ordering code**		**BIS007P**
	Part number	BIS C-319/01-S4	BIS C-325/01-S4
for 5 m cable	**Ordering code**	**BIS007A**	**BIS007R**
	Part number	BIS C-319/05-S4	BIS C-325/05-S4
for 10 m cable	**Ordering code**	**BIS007C**	**BIS007T**
	Part number	BIS C-319/10-S4	BIS C-325/10-S4
Mounting			
Operating temperature		0...+70 °C	0...+70 °C
Storage temperature		–20...+85 °C	–20...+85 °C
Protection per IEC 60529		IP 67	IP 67
Connection to		Processor	Processor
Connection cable		See Connectivity section for cable options	See Connectivity section for cable options

Appropriate data carrier		**see data carriers** BIS C-108-_/L	**BIS000N** BIS C-117-05/L	**BIS001E** BIS C-130-05/L	**BIS001H** BIS C-130-05/L-SA1	**see data carriers** BIS C-134-_/L	**see data carriers** BIS C-191-_/L		**BIS0002** BIS C-100-05/A	**BIS000W** BIS C-121-04/L-SA1	**see data carriers** BIS C-122-_/L	**BIS001E** BIS C-130-05/L	**BIS001H** BIS C-130-05/L-SA1	**see data carriers** BIS C-134-_L	**see data carriers** BIS C-191-_/L	**see data carriers** BIS C-140-_/L-M_
Mounting																
Write distance in mm		0-14	0-15	0-13	0-13	0-12	0-11		0-4	0-1,7	0-2,5	0-4	0-3	0-4	0-3	0-5
Read distance in mm		0-14	0-15	0-13	0-13	0-12	0-11		0-4	0-1,7	0-2,5	0-4	0-3	0-4	0-3,5	0-5
Offset in mm at distance	0.7 mm									±2						
	1 mm	±12	±13	±9	±9	±9	±9		±3,5	±2	±2,5	±4	±4	±4	±4	±3
	3 mm	±12	±12	±9	±9	±9	±9		±3			±2	±2	±2	±3	±3
	5 mm	±11	±12	±9	±9	±9	±9									±2
	7 mm	±11	±11	±8,5	±8,5	±8	±8									
	10 mm	±9	±10	±7,5	±7,5	±6										

Caution!
At 10 m cable length, read/write distance is reduced by 10 %

See technical section for dynamic mode information.

Mounting (see technical section for details):

flush in steel

non-flush on steel

non-metal

Antenna type:

rod

round

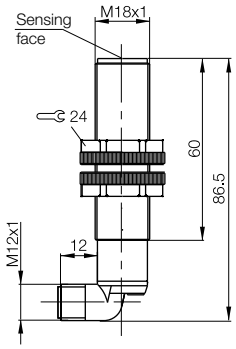

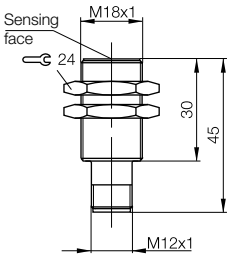

Read/write heads

M30														
X8CrNiS 18-9														
BIS007J														
BIS C-323/01-S4														
BIS007K														
BIS C-323/05-S4														
BIS007L														
BIS C-323/10-S4														
–20...+70 °C														
–20...+85 °C														
IP 67														
Processor														
Cable included														

see data carriers BIS C-104-_ _/A	**see data carriers** BIS C-104-_ _/A	**see data carriers** BIS C-108-_ _/L	**see data carriers** BIS C-108-_ _/L-SA2	**BIS000M** BIS C-117-05/A	**BIS000N** BIS C-117-05/L	**see data carriers** BIS C-128-_ _/L	**see data carriers** BIS C-128-_ _/L	**BIS001E** BIS C-130-05/L	**BIS001H** BIS C-130-05/L-SA1	**see data carriers** BIS C-133-_ _/L	**see data carriers** BIS C-134-_ _/L	**see data carriers** BIS C-190-_ _/L	**see data carriers** BIS C-191-_ _/L	**see data carriers** BIS C-140-_ _/L-M_
1-11	0-12	0-12	0-11	1-12	0-13	0-8	0-13	0-11	0-8	0-10	0-10	0-11	0-10	0-7
1-11	0-12	0-12	0-11	1-12	0-13	0-8	0-13	0-11	0-8	0-10	0-10	0-11	0-10	0-7
±7,5	±7,5	±10	±10	±7,5	±11	±8	±10	±9	±6,5	±10	±9	±10	±8	±5,5
±7	±7	±9	±9	±7,5	±10	±7	±10	±8	±6	±9	±8	±9	±7,5	±5
±7	±7	±9	±8,5	±7	±10	±6,5	±9	±7	±5,5	±9	±7	±9	±7	±4
±7	±7	±8,5	±7,5	±6,5	±9,5	±5,5	±9	±5		±7	±4	±8	±6,5	
												±6,5		

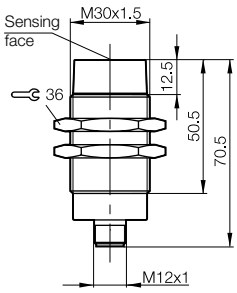

Example:

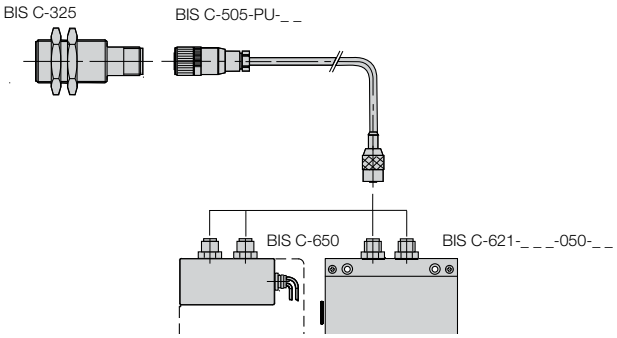

Cables on read/write heads must not be shortened, since functionality can then no longer be ensured.

BIS C Industrial RFID System

Read/write heads with connector

Dimensions		**80×80×40 mm**
Housing material		PBT
for 5 m cable	**Ordering code**	**BIS006Y**
	Part number	BIS C-315/05-S4
for 10 m cable	**Ordering code**	**BIS006Z**
	Part number	BIS C-315/10-S4
Mounting		
Operating temperature		0...+70 °C
Storage temperature		–20...+85 °
Protection per IEC 60529		IP 67
Connection to		Processor
Connection cable		See Connectivity section for cable options

Appropriate data carrier		**see data carriers** BIS C-104-_/A	**see data carriers** BIS C-108-_/L	**see data carriers** BIS C-108-_/L-SA2	**BIS000M** BIS C-117-05/A	**BIS000N** BIS C-117-05/L	**BIS0017** BIS C-127-05/L	**see data carriers** BIS C-128-_/L	**BIS001E** BIS C-130-05/L	**see data carriers** BIS C-133-_/L	**BIS0021** BIS C-134-11/L	**see data carriers** BIS C-190-_/L
Mounting												
Write distance in mm		1-13	2-16	2-16	0-15	0-20	10-30	0-18	0-18	0-15	0-16	0-20
Read distance in mm		1-13	2-16	2-16	0-15	0-20	10-30	0-18	0-18	0-15	0-16	0-20
Offset in mm at distance	0.7 mm											
	1 mm	±15			±15	±17		±17	±16	±17	±16	±18
	3 mm	±14	±14	±15	±15	±17		±17	±16	±15	±16	±18
	5 mm	±11	±12	±12	±14	±17		±17	±16	±15	±16	±18
	7 mm	±10	±11	±10	±12	±15		±15	±14	±14	±14	±18
	10 mm	±8	±8	±8	±12	±15	±30	±15	±14	±14	±12	±18
	15 mm					±14	±27	±14	±11			±16
	20 mm						±20					

Caution!
At 10 m cable length, read/write distance is reduced by 10 %

See technical section for dynamic mode information.

Connector orientation

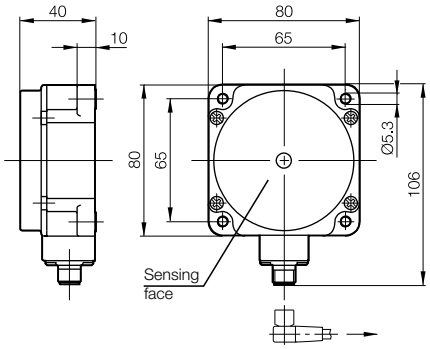

Mounting (see technical section for details):

flush in steel

non-flush on steel

non-metal

Antenna type:

rod

round

Read/write heads with connector

40×40×73 mm														
PBT/Mounting G-2nA14Cu1														
BIS007M														
BIS C-324/05-S4														
BIS007N														
BIS C-324/10-S4														
0...+70 °C														
–20...+85 °C														
P 67														
Processor														
See Connectivity section for cable options														

see data carriers BIS C-104-_ _/A	**see data carriers** **BIS C-104-_ _/A**	**see data carriers** BIS C-108-_ _/L	**see data carriers** BIS C-108-_ _/L-SA2	**BIS000M** BIS C-117-05/A	**BIS000N** BIS C-117-05/L	**see data carriers** BIS C-128-_ _/L	**see data carriers** BIS C-128-_ _/L	**BIS001E** BIS C-130-05/L	**BIS001H** BIS C-130-05/L-SA1	**see data carriers** BIS C-133-_ _/L	**BIS0021** BIS C-134-11/L	**see data carriers** BIS C-190-_ _/L	**see data carriers** BIS C-191-_ _/L	**see data carriers** BIS C-140-_ _/L-M_
1-11	0-12	0-12	0-11	0-12	0-13	0-8	0-13	0-11	0-8	0-10	0-10	0-11	0-10	0-7
1-11	0-12	0-12	0-11	0-12	0-13	0-8	0-13	0-11	0-8	0-10	0-10	0-11	0-10	0-7
±7,5	±7,5	±10	±10	±7,5	±11	±8	±10	±9	±6,5	±10	±9	±10	±8	±5,5
±7	±7	±9	±9	±7,5	±10	±7	±10	±8	±6	±9	±8	±9	±7,5	±5,5
±7	±7	±9	±8,5	±7	±10	±6,5	±9	±7	±5,5	±9	±7	±9	±7	±4
±7	±7	±8,5	±7,5	±6,5	±9,5	±5,5	±9	±5		±7	±4	±8	±6,5	
												±6,5		

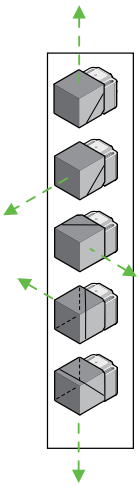

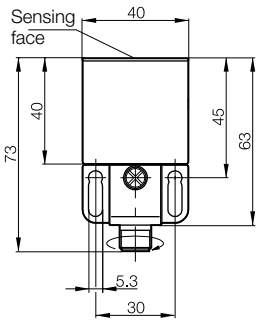

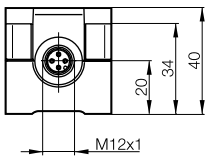

Example:
BIS C-324

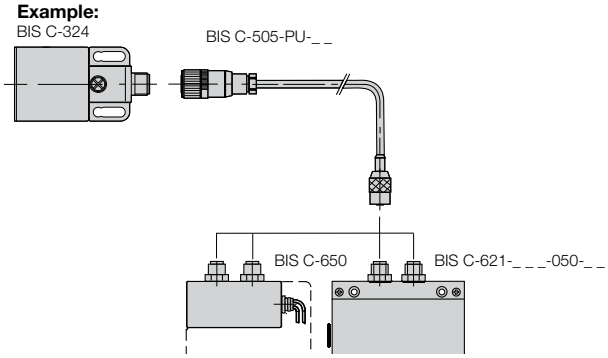

Cables on read/write heads must not be shortened, since functionality can then no longer be ensured.

Read/write heads with connector

Dimensions		**88×43×20 mm**	**55×30×20 mm**
Housing material		POM	POM
for 1 m cable	**Ordering code**		
	Part number	BIS C-327-01	BIS C-328/01-S49
for 5 m cable	**Ordering code**	**BIS0080**	**BIS0081**
	Part number	BIS C-327-05	BIS C-328/05-S49
for 10 m cable	**Ordering code**		
	Part number	BIS C-327-10	BIS C-328/10-S49
Mounting			
Operating temperature		0...+70 °C	0...+70 °C
Storage temperature		–20...+85 °C	–20...+85 °C
Protection per IEC 60529		IP 67	IP 67
Connection to		Processor	Processor
Connection cable		Cable included	See Connectivity section for cable options

Appropriate data carrier		**BIS000C** BIS C-108-05/L	**BIS001C** BIS C-128-11/L	**BIS002N** BIS C-190-32/L	**BIS0011** BIS C-122-04/L	**BIS0015** BIS C-122-11/L
Write distance in mm		0-8	0-8	0-8	0-3	0-3
Read distance in mm		0-8	0-8	0-8	0-3	0-3
Offset in mm at distance	0.7 mm					
	1 mm	±6	±6	±6	±2,5	±2,5
	2 mm	±6	±6	±6	±2,5	±2,5
	3 mm	±6	±6	±6	±2,5	±2,5
	4 mm	±5	±5	±5		
	5 mm	±5	±5	±5		
	6 mm	±4	±4	±4		
	10 mm					
	20 mm					

Caution!
At 10 m cable length, read/write distance is reduced by 10 %

See technical section for dynamic mode information.

Mounting (see technical section for details):

- flush in steel
- non-flush on steel
- non-metal

Antenna type:

- rod
- round

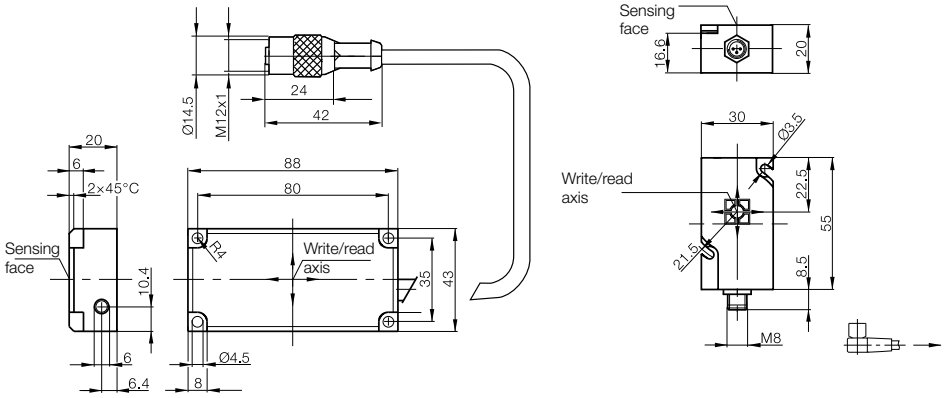

BIS C Industrial RFID System

Read/write heads with connector

| | | |

Dimensions	
Housing material	
Ordering code	
Part number	
Mounting	
Operating temperature	
Storage temperature	
Protection per IEC 60529	
Connection to	
Connection cable	

Example:

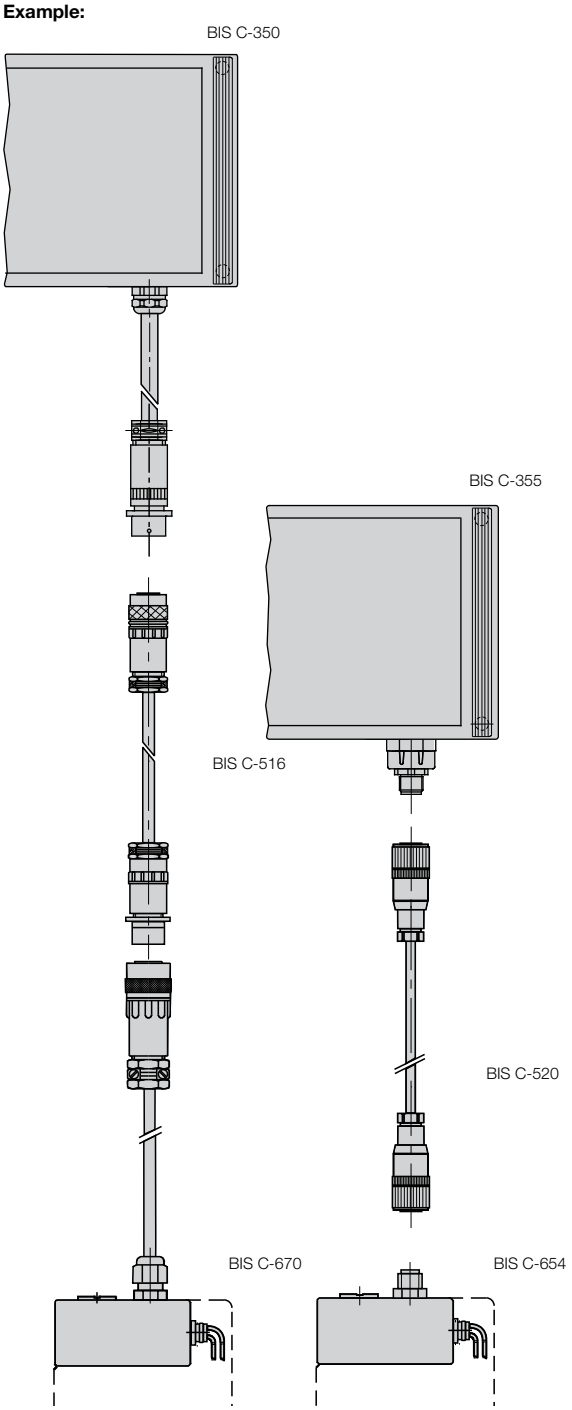

Appropriate data carrier

Write distance in mm		
Read distance in mm		
Offset in mm at distance	0.7 mm	
	1 mm	
	3 mm	
	5 mm	
	7 mm	
	10 mm	
	15 mm	
	20 mm	
	35 mm	
	42 mm	
	60 mm	

See technical section for dynamic mode information.

Mounting (see technical section for details):

flush in steel

non-flush on steel

non-metal

Antenna type:

rod

round

Read/write heads

dual antenna for
increased traverse speed

| | | |

Dimensions	**M16/M16**									
Housing material	Nickel plated brass									
Ordering code	**BIS00JJ**									
Part number	BIS C-380-06/06-01									
Ordering code	**BIS00LU**									
Part number	BIS C-380-06/06-02									
Ordering code	**BIS00N9**									
Part number	BIS C-380-06/06-05									
Read head connection	contactless connection									
Operating temperature	0...+70 °C									
Storage temperature	-20...+85 °C									
Protection per IEC 60529	IP 67									
Appropriate data carrier	**BIS0002** BIS C-100-05/A	**BIS0004** BIS C-103-05/A	**BIS0009** BIS C-105-05/A	**BIS000T** BIS C-121-04/L	**BIS0011** BIS C-122-04/L					
Mounting	▬	▬	▬	▬	▬					
Appropriate read/write head	BIS C-300									
	BIS C-302									
	BIS C-305									
	BIS C-306									
Max. read/write distance	see diagram									

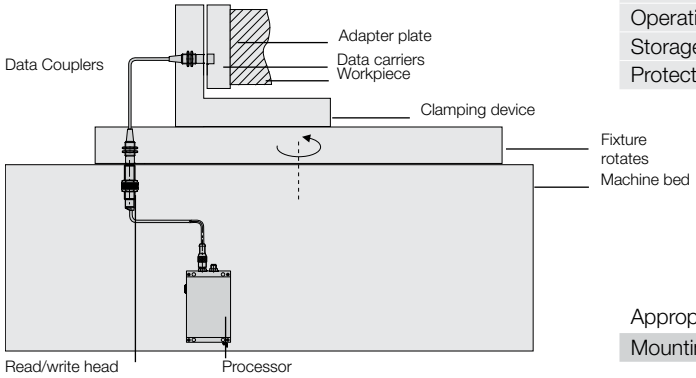

Data couplers are used in applications where a dual mechanical interface is mandatory.

Mounting (see technical section for details):

- ▬ flush in steel
- ▬ non-flush on steel
- ▬ non-metal

Antenna type:

- rod
- round

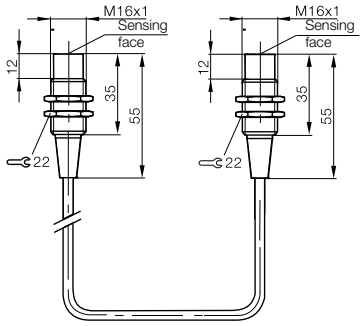

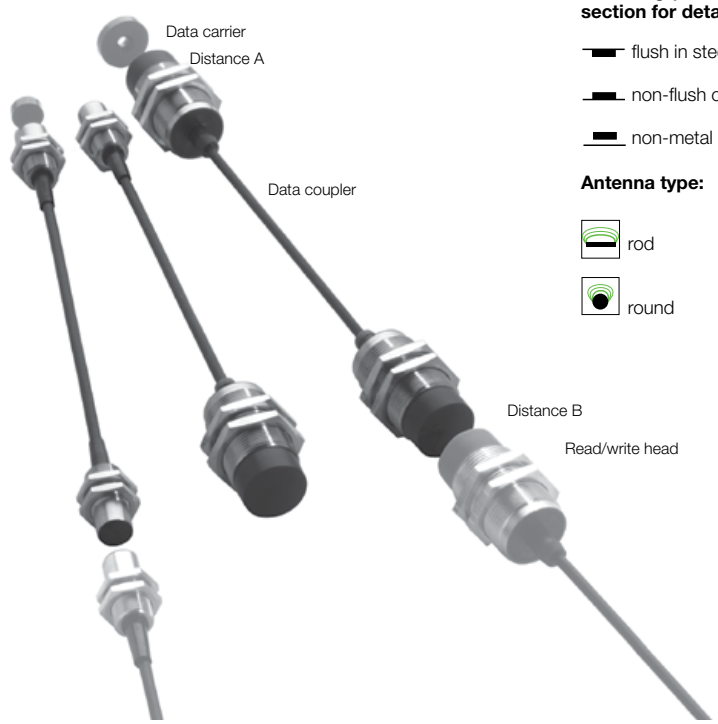

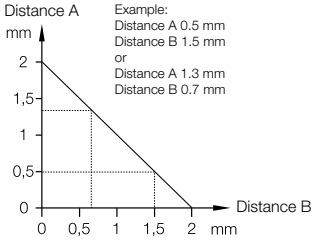

Data couplers

50×25×10/M16	**M16/M30**	**M30/M30**
Nickel plated brass	Nickel plated brass	Nickel plated brass
		BIS00JP
		BIS C-380-10/10-01
BIS00JE	**BIS00JM**	
BIS C-380-05/06-02	BIS C-380-06/10-02	
BIS00N8	**BIS00JN**	**BIS00JR**
BIS C-380-05/06-05	BIS C-380-06/10-05	BIS C-380-10/10-05
contactless connection	contactless connection	contactless connection
0...+70 °C	0...+70 °C	0...+70 °C
–20...+85 °C	–20...+85 °C	–20...+85 °C
IP 67	IP 67	IP 67

BIS0002 BIS C-100-05/A	**BIS0002** BIS C-100-05/A	**see data carriers** BIS C-104-_ _/A
BIS0004 BIS C-103-05/A	**BIS0004** BIS C-103-05/A	**see data carriers** BIS C-108-_ _/L
BIS0009 BIS C-105-05/A	**BIS0009** BIS C-105-05/A	**BIS000N** BIS C-117-05/L
BIS000T BIS C-121-04/L	**BIS000T** BIS C-121-04/L	**see data carriers** BIS C-128-_ _/L
BIS0011 BIS C-122-04/L	**BIS0011** BIS C-122-04/L	**BIS001E** BIS C-130-05/L
BIS C-300	BIS C-310	BIS C-310
BIS C-302		
BIS C-305		
BIS C-306		
see diagram	see diagram	see diagram

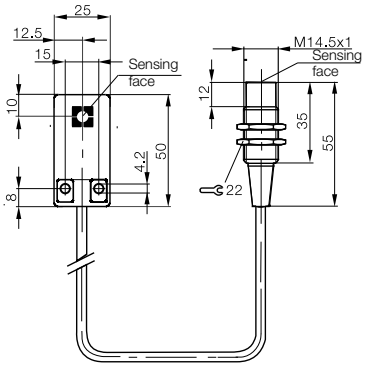

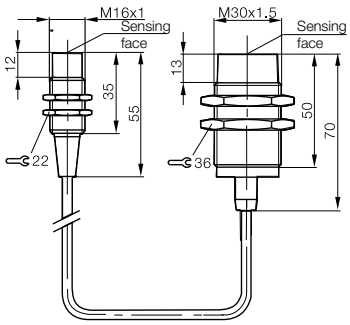

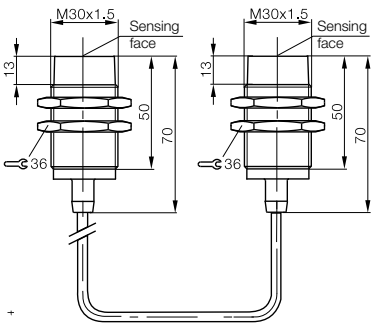

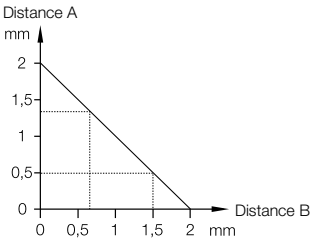

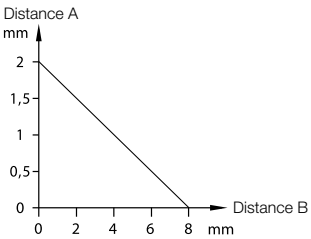

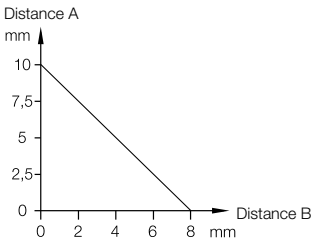

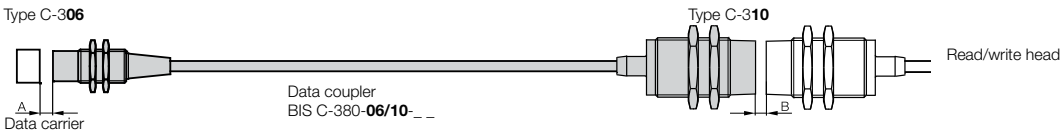

BIS C Industrial RFID System

8-bit processor for read-only mode

Parallel I/O Interface

Dimensions		**M30**		
Housing material		CuZn nickel plated/PA		
Description/interface		8-bit parallel	8 x 8-bit parallel	2 x 8-bit parallel dynamic*
5 m cable	**Ordering code**	**BIS00H6**	**BIS00HC**	**BIS00HH**
	Part number	BIS C-60R-001-08P-PU-05	BIS C-60R-002-08P-PU-05	BIS C-60R-003-08P-PU-05
10 m cable	**Ordering code**	**BIS00H7**	**BIS00HE**	**BIS00HJ**
	Part number	BIS C-60R-001-08P-PU-10	BIS C-60R-002-08P-PU-10	BIS C-60R-003-08P-PU-10
20 m cable	**Ordering code**	**BIS00H8**	**BIS00TC**	
	Part number	BIS C-60R-001-08P-PU-20	BIS C-60R-002-08P-PU-20	
Mounting				
Supply voltage		24 V DC +10/–20 % (incl. ripple)		
Current		max. 300 mA without load		
Output current per output		max. 50 mA		
Voltage drop		≤ 1.5 V		
Leakage current		≤ 0.08 mA		
Operating temperature		0...+50 °C		
Enclosure rating		IP 67		
Tightening torque		20 Nm		
Conductor cross-sections		2 × 0.5 mm² and 9 × 0.18 mm²		
LED function indicator		yes		

Appropriate data carrier		**BIS000T** BIS C-121-04/L	**BIS000T** BIS C-121-04/L	**BIS0011** BIS C-122-04/L	**BIS0004** BIS C-103-05/A	**BIS0004** BIS C-103-05/A	**BIS001E** BIS C-130-05/L	**BIS001E** BIS C-130-05/L	**BIS0002** BIS C-100-05/A	**BIS0002** BIS C-100-05/A	**BIS0019** BIS C-128-05/L	**BIS000M** BIS C-117-05/A	**BIS000N** BIS C-117-05/L	**BIS000C** BIS C-108-05/L	**BIS0006** BIS C-104-11/A	**BIS000C** BIS C-108-05/L
Mounting																
Write distance in mm																
Read distance in mm		0-3	1-5	1-5	0-4	1-5	0-5	1-8	0-5	1-6	3-12	1-8	1-8	1-8	1-8	0-6
Offset in mm at distance	0.7 mm															
	1 mm	±2	±3	±3	±4	±2,5	±3	±4	±2,5	±3		±5	±7	±7	±4	±7
	3 mm	±2	±3	±3	±2,5	±2,5	±3	±5	±3	±3	±7	±5	±7	±7	±4	±7
	5 mm		±3	±3		±2,5	±3	±5	±3	±3	±6	±5	±7	±7	±4	±6
	7 mm							±5			±5	±5	±6	±6	±4	

Mounting (see technical section for details):

- flush in steel
- non-flush on steel
- non-metal

Antenna type:

- rod
- round

The BIS C-60R-001-08P-_ _ read-only system is designed for simple applications of the BIS C read/write system. It is supplied as a read-only system and provides the 8 bits of information without any additional components in parallel format. Three bytes per value are always used starting at Address 0.

The remaining bytes on the data carrier can be used for other purposes with the appropriate processors. For this function the bytes on the data carrier (starting at Address 0) must be pre-programmed before a read operation can take place.

To easily program the data carrier a processor with serial port and Balluff 007 protocol are used. Programming is easy and fast using the free BISCOMRW software downloadable from the Balluff web site at www.balluff.com.

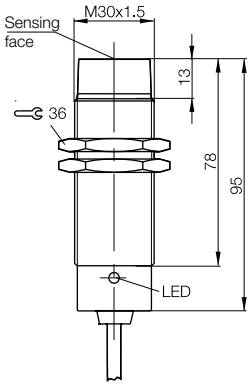

BIS C Industrial RFID System

8-bit processor for read-only mode

	40×40×149 mm
	CuZn nickel plated/PA
	8-bit parallel
	BIS00HL
	BIS C-61R-001-08P-PU-05
	24 V DC +10/–20 % (incl. ripple)
	max. 300 mA without load
	max. 50 mA
	≤ 1.5 V
	≤ 0.08 mA
	0...+50 °C
	IP 67
	20 Nm
	2 × 0.5 mm² and 9 × 0.18 mm²
	yes

BIS000T BIS C-121-04/L	**BIS0011** BIS C-122-04/L	**BIS000T** BIS C-121-04/L	**BIS0011** BIS C-122-04/L	**BIS0004** BIS C-103-05/A	**BIS0004** BIS C-103-05/A	**BIS001E** BIS C-130-05/L	**BIS001E** BIS C-130-05/L	**BIS0002** BIS C-100-05/A	**BIS0002** BIS C-100-05/A	**BIS0019** BIS C-128-05/L	**BIS0019** BIS C-128-05/L	**BIS000M** BIS C-117-05/A	**BIS000N** BIS C-117-05/L	**BIS0006** BIS C-104-11/A	**BIS000H** BIS C-108-11/L	**BIS000H** BIS C-108-11/L
0-2	0-2	1-4	1-4	0-3	1-4	0-4	1-7	0-4	1-5	0-3	3-7	1-7	1-7	1-4	0-5	1-7
±2	±2	±3	±3	±3	±2,5	±3	±4	±2,5	±3	±5		±5	±7	±4	±7	±7
		±3	±3		±2,5	±3	±5	±3	±3		±7	±5	±7	±4	±6	±7
							±5				±6	±5	±6	±4		±6

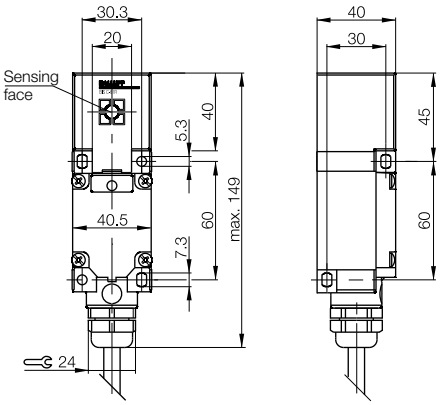

Parallel I/O Interface

The **compact class BIS C-6_ _** with its reduced dimensions and various interface options can be used wherever ambient conditions require higher protection.

Small, compact, flexible and economical

Advantages of the BIS C-605 parallel version

The parallel interface is a read “only” interface. Writing is therefore not possible in parallel mode. However, the processor unit can write a single piece of bit information (OK/NOK, large/small, version 1/version 2) to the data carrier.
Bit information is transmitted in the form of a separate output signal.

Description		
Parallel	**Ordering code**	
	Part number	
Supply voltage, Ripple		
Current		
Operating temperature		
Storage temperature		
Protection per IEC 60529		
Read/write head ports		
Control inputs		
Control outputs		
Connection type		
Accessories included		
Connection cable		

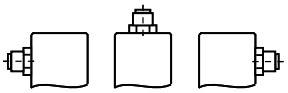

Adapter or antenna can be rotated in 3 directions

	Processor
	BIS00N7
	BIS C-6005-027-650-05-ST4
	24 V DC ±20 %, ≤ 10 %
	≤ 400 mA
	0...+60 °C
	0...+60 °C
	IP 54
	2 external
	4 (via opto-coupler), 24 V DC
	13 (via opto-coupler), 24 V DC
	MIN Sub D 25-pin
	Configuration software
	See Connectivity section for cable options

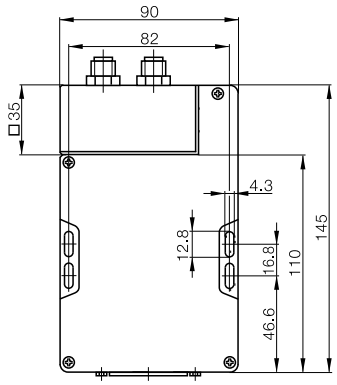

Description		Processor	
RS232/Balluff dialog	**Ordering code**	**BIS008U**	
	Part number	BIS C-600-007-650-00-KL1	
RS422/RS485, 4-wire, Point-to-Point/Balluff dialog	**Ordering code**	**BIS008W**	
	Part number	BIS C-600-007-650-02-KL1	
Supply voltage, Ripple		24 V DC ±20 %, ≤ 10 %	
Current		≤ 400 mA	
Operating temperature		0...+60 °C	
Storage temperature		0...+60 °C	
Protection per IEC 60529		IP 65	
Read/write head ports		2 external	
Control inputs		1 (via opto-coupler), 24 V DC	
Control outputs		4 (via opto-coupler), 24 V DC	
Connection for			
Connection type		Terminals 3 × Pg 9	
Accessories included		Configuration software	
Connection cable			

Adapter or antenna can be rotated in 3 directions

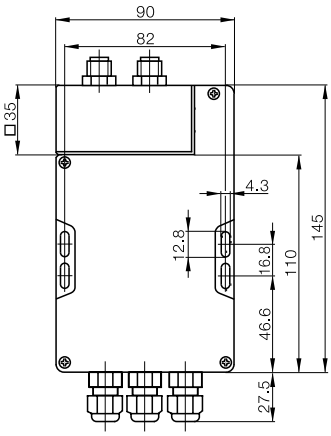

The **compact class BIS C-6_ _** with its reduced dimensions and various interface options can be used wherever ambient conditions require higher protection.

The devices are ideal for IP 65 applications involving media that is not aggressive to PS plastic.

Small, compact, flexible and economical

Read/write head can be rotated in 3 directions

Processors

Processor	Processor	Processor
BIS0092		**BIS00AZ**
BIS C-600-007-670-00-KL1	BIS C-600-007-654-00-KL1	BIS C-620-007-050-00-ST2
		BIS00KW
		BIS C-620-007-050-02-ST2
24 V DC ±20 %, ≤ 10 %	24 V DC ±20 %, ≤ 10 %	24 V DC ±20 %, ≤ 10 %
≤ 400 mA	≤ 400 mA	≤ 400 mA
0...+60 °C	0...+60 °C	0...+60 °C
0...+60 °C	0...+60 °C	0...+60 °C
IP 65	IP 65	IP 65
1 external	1 external/special	2 external
1 (via opto-coupler), 24 V DC	1 (via opto-coupler), 24 V DC	1 connector round 9-pin
4 (via opto-coupler), 24 V DC	4 (via opto-coupler), 24 V DC	1 connector round 5-pin
		RS232/422/485
Terminals 3 × Pg 9	Terminals 3 × Pg 9	Read/write heads BIS C-3_ _ (Exception: BIS C-350)
Configuration software	Configuration software	Configuration software
		See Connectivity section for cable options

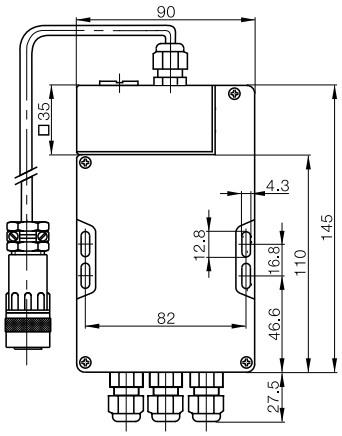

for read/write head C-350

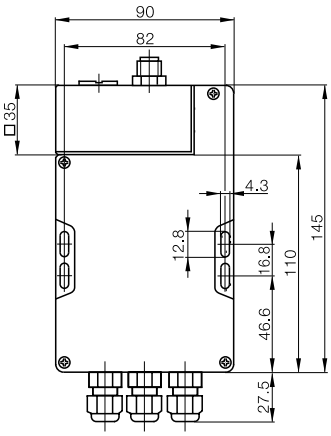

for read/write head BIS C-355/05-S92

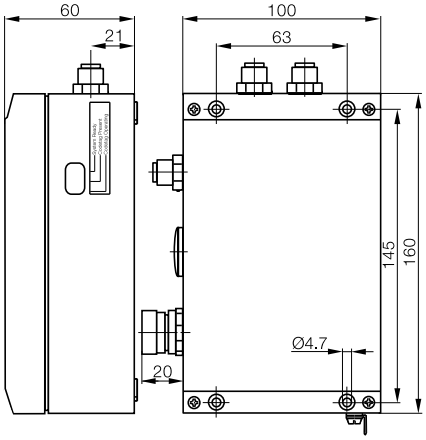

Processor unit **BIS C-62_** enclosed in a robust metal housing is suitable for applications requiring degree of protection IP 65. Flexible interface versions and the option of connecting two read/write heads to a single unit are ideal.

The special housing provides effective protection against environmental influences and aggressive media. Impacts do not affect the degree of protection.

Description		Processor
PROFIBUS-DP with connector	**Ordering code**	**BIS009A**
	Part number	BIS C-6002-019-650-03-ST11
PROFIBUS-DP/memory optimization with connector	**Ordering code**	**BIS009M**
	Part number	BIS C-6002-028-650-03-ST11
PROFIBUS-DP with PG fitting	**Ordering code**	**BIS0099**
	Part number	BIS C-6002-019-650-03-KL2
PROFIBUS-DP/memory optimization with PG fitting	**Ordering code**	**BIS009L**
	Part number	BIS C-6002-028-650-03-KL2
Supply voltage, Ripple		24 V DC ±20 %, ≤ 10 %
Current		≤ 400 mA
Operating temperature		0...+60 °C
Storage temperature		0...+60 °C
Protection per IEC 60529		IP 65
Read/write head ports		2 external
Service interface		RS232
Control inputs		1 (via opto-coupler), 24 V DC
Control outputs		2 (via opto-coupler), 24 V DC
Connection version ST11		2 connector round 5-pin, B-coded 1 connector round 5-pin
Connection type clamp terminals KL2		Terminals 1 × Pg 9, Terminals 2 × Pg 11
Accessories included		Software GSD file
Connection cable		See Connectivity section for cable options

The **compact class BIS C-600_** with its reduced dimensions and various interface options can be used wherever ambient conditions require higher protection.

Small, compact, flexible and economical

Cost-effective identification – operate 2 read/write heads simultaneously

- Selectable division of the data width on the PROFIBUS-DP, from 4 to 128 bytes
- Free assigning of the data width for each read/write head
- Optimum data speed, internal cycle time is shorter than the BUS activation time
- Service friendly, all parameter data are stored in an exchangeable memory
- BUS address selectable with switches
- Compatible with BIS C-602 device family
- Accepts all read/write heads
- Compatible with entire BIS C system

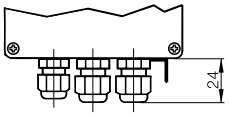

Version KL2

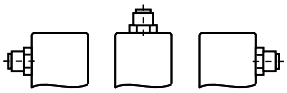

Adapter or antenna can be rotated in 3 directions

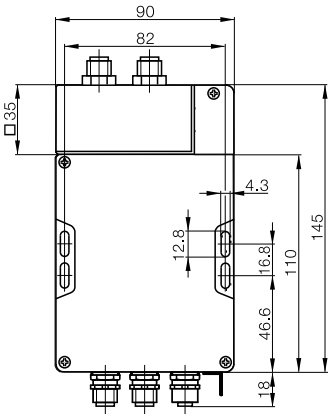

Processors

Processor	Processor	Processor
	BIS009F	**BIS009J**
	BIS C-6002-019-654-03-ST11	BIS C-6002-019-655-03-ST11
BIS009K		**BIS009H**
BIS C-6002-019-670-03-KL2		BIS C-6002-019-655-03-KL2
24 V DC ±20 %, ≤ 10 %	24 V DC ±20 %, ≤ 10 %	24 V DC ±20 %, ≤ 10 %
≤ 400 mA	≤ 400 mA	≤ 400 mA
0...+60 °C	0...+60 °C	0...+60 °C
0...+60 °C	0...+60 °C	0...+60 °C
IP 65	IP 65	IP 65
1 external	1 external	4 external
RS232	RS232	RS232
1 (via opto-coupler), 24 V DC	1 (via opto-coupler), 24 V DC	1 (via opto-coupler), 24 V DC
2 (via opto-coupler), 24 V DC	2 (via opto-coupler), 24 V DC	2 (via opto-coupler), 24 V DC
2 connector round 5-pin, B-coded	2 connector round 5-pin, B-coded	2 connector round 5-pin, B-coded
1 connector round 5-pin	1 connector round 5-pin	1 connector round 5-pin
Terminals 1 × Pg 9, Terminals 2 × Pg 11	Terminals 1 × Pg 9, Terminals 2 × Pg 11	Terminals 1 × Pg 9, Terminals 2 × Pg 11
Software GSD file	Software GSD file	Software GSD file
See Connectivity section for cable options	See Connectivity section for cable options	See Connectivity section for cable options

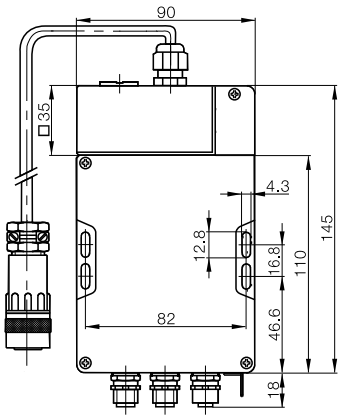

for read/write head BIS C-350

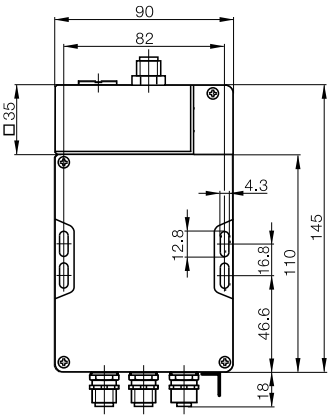

for read/write head BIS C-355/_ _-S92

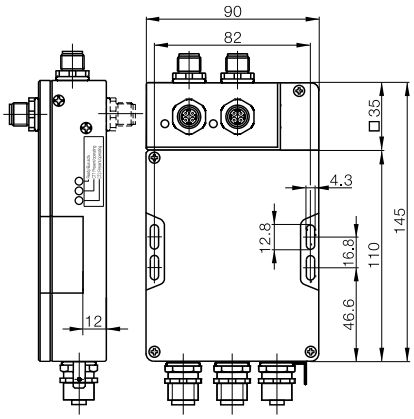

Note: 2 read/write heads can be operated simultaneously.

Threaded cover
Ordering code: BAM0114
Part number: BKS 12-CS-01
coded for M12 B connector type

PROFIBUS-DP

Cost-effective identification – operate 2 read/write heads simultaneously!

In robust metal housing

Description		
PROFIBUS-DP	**Ordering code**	
	Part number	
PROFIBUS-DP (with memory optimized data carrier processing	**Ordering code**	
	Part number	
Supply voltage, Ripple		
Current		
Operating temperature		
Storage temperature		
Protection per IEC 60529		
Read/write head ports		
Service interface		
Connection for		
Connection type		
Accessories included		
Connection cable		

Threaded cover
Order code: BAM012P
Part number: BKS 23-CS-00
for M23 connector IP 65 protective cover for unused connectors!

Processors

Processor	Processor
BIS00AL	**BIS00AM**
BIS C-6022-019-050-03-ST10	BIS C-6022-019-050-03-ST14
BIS00AP	**BIS00AR**
BIS C-6022-028-050-03-ST10	BIS C-6022-028-050-03-ST14
24 V DC ±20 %, ≤ 10 %	24 V DC ±20 %, ≤ 10 %
≤ 400 mA	≤ 400 mA
0...+60 °C	0...+60 °C
0...+60 °C	0...+60 °C
IP 65	IP 65
2 external	2 external
RS232	RS232
Read/write heads BIS C-3_ _ Exception: BIS C-350/BIS C-355	Read/write heads BIS C-3_ _ Exception: BIS C-350/BIS C-355
2 connectors round 12-pin, (bus in/out) 1 connector round 5-pin (power) 1 connector round 4-pin (service)	Connector round 5-pin, B-coded, (bus in/out) 1 connector round 5-pin (power) 1 connector round 4-pin (service)
Software GSD file	Software GSD file
See Connectivity section for cable options	See Connectivity section for cable options

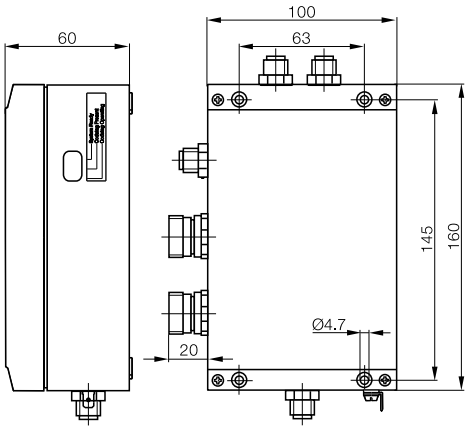

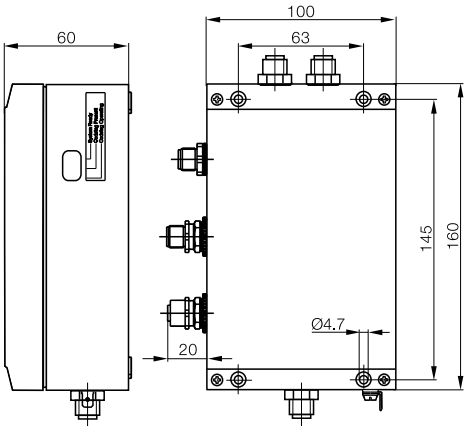

Threaded cover
Ordering code: BAM0114
Part number: BKS 12-CS-01
coded for M12 B connector type

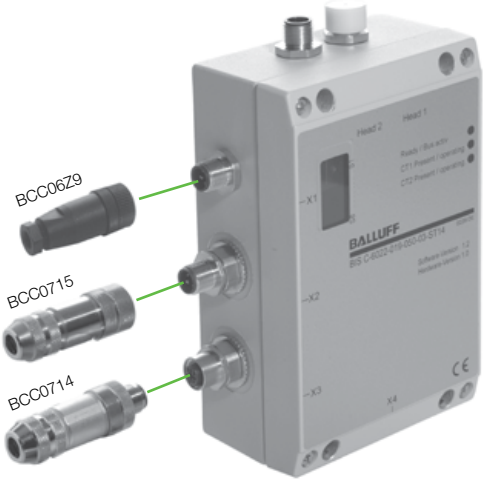

DeviceNet™

The **compact class BIS C-600_** with its reduced dimensions and various interface options can be used wherever ambient conditions require higher protection.

The devices are ideal for IP 65 and applications involving media that is not aggressive to PS plastic.

Small, compact, flexible and economical

Cost-effective identification – operate 2 read/write heads simultaneously

- Freely selectable buffer size between 0 and 256 bytes
- Service friendly, all parameter data are stored in an exchangeable memory
- Accepts all read/write heads
- Compatible with entire BIS C system

Description		Processor
DeviceNet™	**Ordering code**	**BIS009N**
	Part number	BIS C-6003-025-650-03-ST12
Supply voltage, Ripple		24 V DC ±20 %, ≤ 10 %
Current		≤ 400 mA
Operating temperature		0...+60 °C
Storage temperature		0...+60 °C
Protection per IEC 60529		IP 65
Read/write head ports		2 external
Service interface		RS232
Connection type		3 connector round 5-pin
Accessories included		Software EDS file
Connection cable		See Connectivity section for cable options

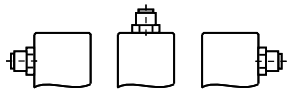

Adapter or antenna can be rotated in 3 directions

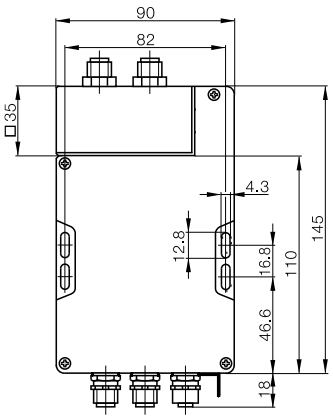

Processors

Processor	Processor	Processor
BIS009T		**BIS009R**
BIS C-6003-025-670-03-ST12	BIS C-6003-025-654-03-ST12	BIS C-6003-025-655-03-ST12
24 V DC ±20 %, ≤ 10 %	24 V DC ±20 %, ≤ 10 %	24 V DC ±20 %, ≤ 10 %
≤ 400 mA	≤ 400 mA	≤ 400 mA
0...+60 °C	0...+60 °C	0...+60 °C
0...+60 °C	0...+60 °C	0...+60 °C
IP 65	IP 65	IP 65
1 external	1 external	4 external
RS232	RS232	RS232
3 connector round 5-pin	3 connector round 5-pin	3 connector round 5-pin
Software EDS file	Software EDS file	Software EDS file
See Connectivity section for cable options	See Connectivity section for cable options	See Connectivity section for cable options

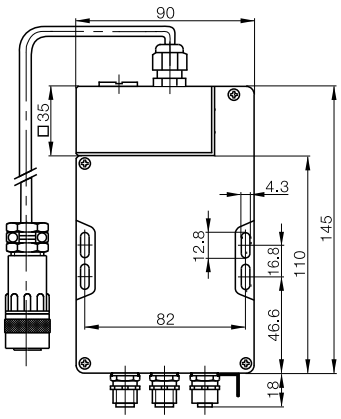

for read/write head BIS C-350

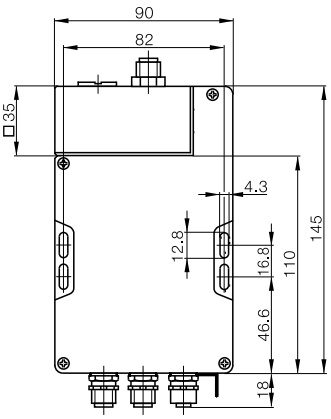

for read/write head BIS C-355/_ _-S92

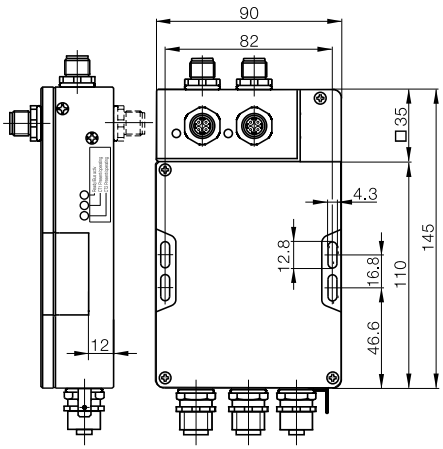

Note: 2 read/write heads can be operated simultaneously.

Cost-effective identification – operate 2 read/write heads simultaneously.

In robust metal housing

Description		
DeviceNet™	**Ordering code**	
	Part number	
Supply voltage, Ripple		
Current		
Operating temperature		
Storage temperature		
Protection per IEC 60529		
Read/write head ports		
Service interface		
Connection for		
Connection type		
Accessories included		
Accessories (please order separately)		

Processors

	Processor
	BIS00AT
	BIS C-6023-025-050-03-ST13
	24 V DC ±20 %, ≤ 10 %
	≤ 400 mA
	0...+60 °C
	0...+60 °C
	IP 65
	2 external
	RS232
	Read/write heads BIS C-3_ _ Exception: BIS C-350/BIS C-355
	3 connector round 5-pin 1 connector round 4-pin
	Software ESD-file
	BIS-C -623 threaded cover 7/8"
	See Connectivity section for cable options

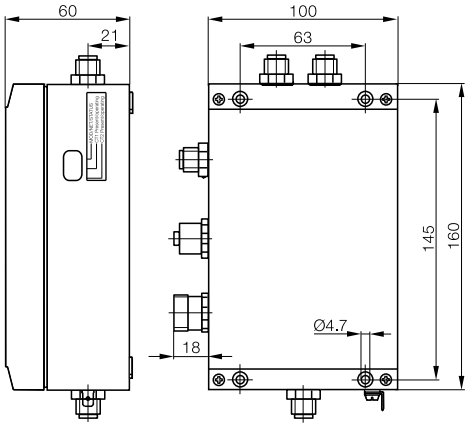

Threaded cover
Ordering code: BAM012T
Part number: BKS-7/8-CS-00-A
for 7/8" connection
IP 65 protective threaded
cover for unused connectors!

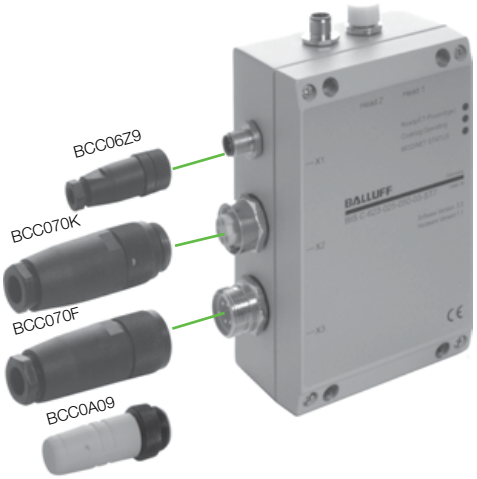

Cost-effective identification – operate 2 read/write heads simultaneously.

In robust metal housing

Description		Processor
EtherNet/IP	**Ordering code**	**BIS00AU**
	Part number	BIS C-6026-034-050-06-ST19
Supply voltage, Ripple		24 V DC ±20 %, ≤ 20 %
Current		≤ 400 mA
Operating temperature		0...+60 °C
Storage temperature		0...+60 °C
Protection per IEC 60529		IP 65
Read/write head ports		2 external
Service interface		RS232
Connection for		Read/write heads BIS C-3_ _ Exception: BIS C-350 and BIS C-355
Connection type		Connector round 5-pin, D-coded 1 connector 5-pin 1 connector 4-pin
Accessories included		Configuration software
Connection cable		See Connectivity section for cable options

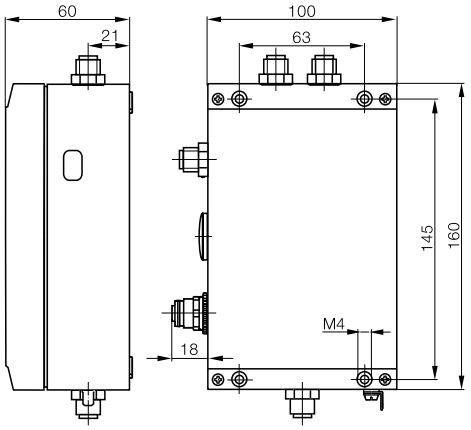

Ethernet TCP/IP

BIS C Industrial RFID System
Processors

Description		Processor
EtherNet with standard	**Ordering code**	**BIS00AY**
TCP/IP protocol	Part number	BIS C-6027-039-050-06-ST19
Supply voltage, Ripple		24 V DC ±20 %, ≤ 10 %
Current		≤ 400 mA
Operating temperature		0...+60 °C
Storage temperature		0...+60 °C
Protection per IEC 60529		IP 65
Read/write head ports		2 external
Service interface		RS232
Connection for		Read/write heads BIS C-3_ _ Exception BIS C-350 and BIS C-355
Connection type		Connector round 5-pin, D-coded 1 connector 5-pin 1 connector 4-pin
Accessories included		Configuration software
Connection cable		See Connectivity section for cable options

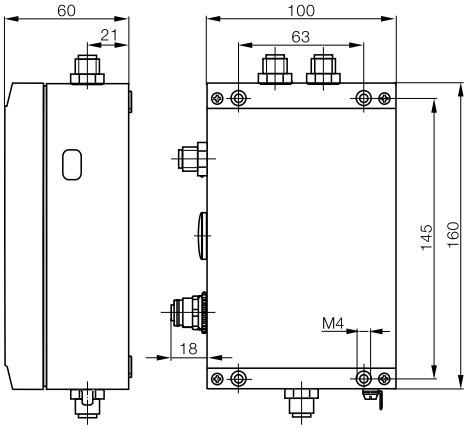

Cost-effective identification – operate 2 read/write heads simultaneously.

Description		Processor	
PROFINET RT with	**Ordering code**	**BIS00K3**	
IRT-capable 2-PORT switch	Part number	BIS C-6008-048-650-06-ST23	
Supply voltage, Ripple		24 V DC ±10 %, ≤ 10 %	
Current		≤ 400 mA	
Operating temperature		0...+60 °C	
Storage temperature		0...+60 °C	
Protection per IEC 60529		IP 65	
Read/write head ports		2 external	
Service interface		RS232 internal	
Connection for		Read/write heads BIS C-3_ _ Exception: BIS C-350 and BIS C-355	
Connection type		Connector round 5-pin, A-coded 2 connector 4-pin, D-coded	
Accessories included		Configuration software	
Connection cable		See Connectivity section for cable options	

Adapter or antenna can be rotated in 3 directions

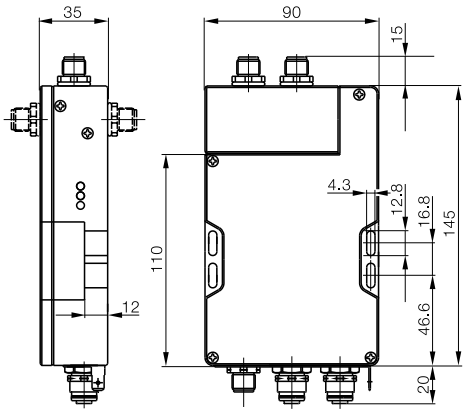

Processors

Processor	Processor
BIS00TU	**BIS00K4**
BIS C-6028-048-050-06-ST28	BIS C-6028-048-050-06-ST22
24 V DC ±10 %, ≤ 10 %	24 V DC ±10 %, ≤ 10 %
≤ 400 mA	≤ 400 mA
0...+60 °C	0...+60 °C
0...+60 °C	0...+60 °C
IP 65	IP 65
2 external	2 external
RS232	RS232
Read/write heads BIS C-3_ _ Exception BIS C-350 and BIS C-355	Read/write heads BIS C-3_ _ Exception BIS C-350 and BIS C-355
Connector round 5-pin, 7/8" 2 connector 4-pin, D-coded	1 connector 5-pin, Push-pull AIDA 2 connector 8-pin, Push-pull RJ45 AIDA Connector round 4-pin
Configuration software	Configuration software
See Connectivity section for cable options	See Connectivity section for cable options

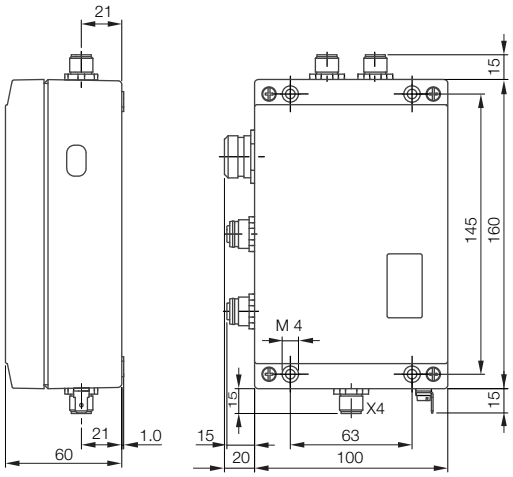

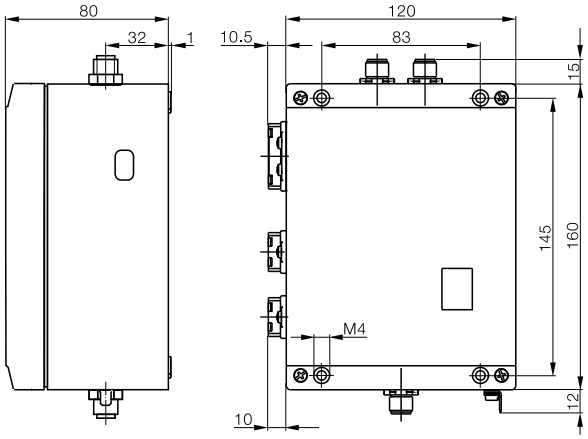

The robust version solution for connection to ProfiNet with AIDA standard (Automation Initiative of German Domestic Automobile Manufacturers)

Standard handheld

For enhanced operating convenience

Allows portable writing and reading of BIS C data carriers.
Easy operation thanks to:
- Touchscreen with large Windows CE® color display
- Pre-installed Balluff software and keyboard or stylus

Ideal for mobile conditions and challenging environments. Data transfer via optional WLAN or wired USB. The handheld is also modular for expandability.

Additional options:
A pistol grip and desktop docking/charging station.

Antenna type		
Function		
Housing material		
Standard base	**Ordering code**	
	Part number	
Standard + WLAN module	**Ordering code**	
	Part number	
Standard + 1D code reader	**Ordering code**	
	Part number	
Standard + 2D code reader	**Ordering code**	
	Part number	
Standard + ID code reader + WLAN	**Ordering code**	
	Part number	
Standard +2D code reader + WLAN	**Ordering code**	
	Part number	
Keyboard		
Display		
Supply voltage		
Capacity		
Interface		
Working temperature		
Degree of protection in accordance with IEC 60529		
Read/write head option		
Accessories included		
Appropriate data carrier		
Please order additional accessories separately		

Antenna type:

rod

round

Handheld Standard **BIS C-87_-1-008-x-000_**
Includes charger and stylus

Recommended accessories
(please order separately)

Description	Pistol grip option	Optional docking station with power supply	Replacement battery 4000mAh rechargeable battery
Part code	**FHW0004**	**FHW0003**	**WA3010**
Part number	11023836	11023834	162936

BIS C Industrial RFID System

Standard handheld

General purpose	Rod	Tool ID
Read/write	Read/write	Read/write
ABS	ABS	ABS
BAE00HW		
BIS C-870-1-008-X-000-3000	BIS C-871-1-008-X-000-3000	BIS C-873-1-008-X-000-3000
BAE00KW		
BIS C-870-1-008-X-001-3000	BIS C-871-1-008-X-001-3000	BIS C-873-1-008-X-001-3000
BIS C-870-1-008-X-002-3000	BIS C-871-1-008-X-002-3000	BIS C-873-1-008-X-002-3000
BIS C-870-1-008-X-003-3000	BIS C-871-1-008-X-003-3000	BIS C-873-1-008-X-003-3000
BIS C-870-1-008-X-004-3000	BIS C-871-1-008-X-004-3000	BIS C-873-1-008-X-004-3000
BIS C-870-1-008-X-005-3000	BIS C-871-1-008-X-005-3000	BIS C-873-1-008-X-005-3000
52 buttons, alphanumeric	52 buttons, alphanumeric	52 buttons, alphanumeric
TFT Touchscreen display	TFT Touchscreen display	TFT Touchscreen display
3.7 V rechargeable battery pack	3.7 V rechargeable battery pack	3.7 V rechargeable battery pack
4000 mA/h	4000 mA/h	4000 mA/h
RS232/Balluff Dialog	RS232/Balluff Dialog	RS232/Balluff Dialog
–10...+50 °C	–10...+50 °C	–10...+50 °C
IP 65	IP 65	IP 65
Integrated	Integrated	Integrated
Charging power supply and stylus	Charging power supply and stylus	Charging power supply and stylus
for BIS C-Data carrier with round coil Ø ≥ 35 mm	for BIS C-Data carrier with rod antenna	for BIS C-Data carrier with round coil Ø ≤ 34 mm
Docking Station and Pistol Grip	Docking Station and Pistol Grip	Docking Station and Pistol Grip

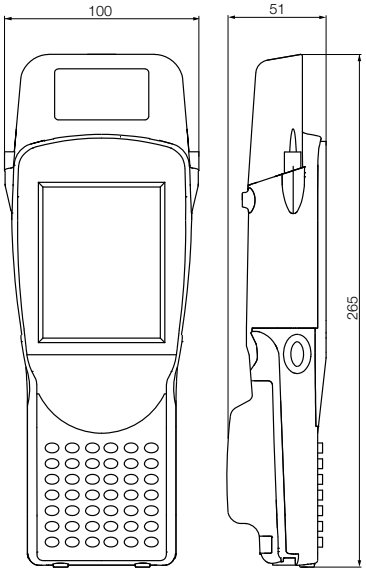

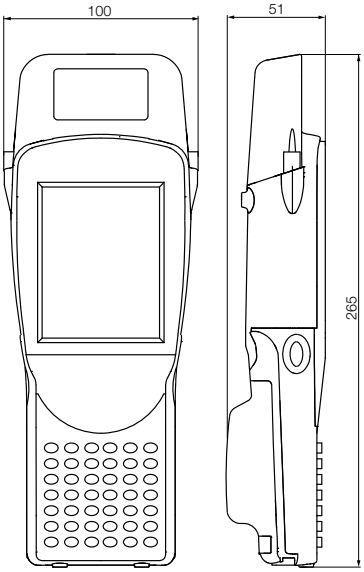

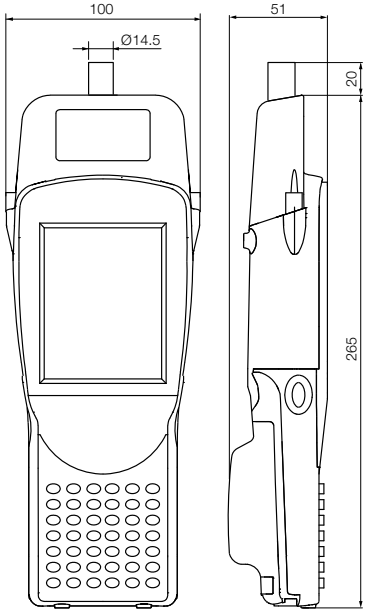

Template Software Version

For enhanced operating convenience

Allows portable writing and reading of BIS C data carriers.
Easy operation thanks to:
- Touchscreen with large Windows CE® color display
- Pre-installed Balluff software and keyboard or stylus
- Additional pre-installed user-configurable template GUI software for customized user screens.

Ideal for mobile conditions and challenging environments. Data transfer via optional WLAN or wired USB. The handheld is also modular for expandability.

Additional options:
A pistol grip and desktop docking/charging station.

Template software program provides customizable data formatting and screens. See page 234 for details.

Antenna type		
Function		
Housing material		
Standard base	**Ordering code**	
	Part number	
Standard + WLAN module	**Ordering code**	
	Part number	
Standard + 1D code reader	**Ordering code**	
	Part number	
Standard + 2D code reader	**Ordering code**	
	Part number	
Standard + ID code reader + WLAN	**Ordering code**	
	Part number	
Standard +2D code reader + WLAN	**Ordering code**	
	Part number	
Keyboard		
Display		
Supply voltage		
Capacity		
Interface		
Working temperature		
Degree of protection in accordance with IEC 60529		
Read/write head option		
Accessories included		
Appropriate data carrier		
Please order additional accessories separately		

Antenna type:

rod

round

Handheld Standard **BIS C-87_-1-008-x-000_**
Includes charger and stylus

Recommended accessories
(please order separately)

Description	Pistol grip option	Optional docking station with power supply	Replacement battery 4000mAh rechargeable battery
Part code	**FHW0004**	**FHW0003**	**WA3010**
Part number	11023836	11023834	162936

BIS C Industrial RFID System

Standard handheld with software

General purpose	Rod	Tool ID
Read/write	Read/write	Read/write
ABS	ABS	ABS
BAE00HH		**BAE00HF**
BIS C-870-1-008-000-3001	BIS C-871-1-008-000-3001	BIS C-873-1-008-000-3001
BIS C-870-1-008-001-3001	BIS C-871-1-008-001-3001	BIS C-873-1-008-001-3001
BIS C-870-1-008-002-3001	BIS C-871-1-008-002-3001	BIS C-873-1-008-002-3001
BIS C-870-1-008-003-3001	BIS C-871-1-008-003-3001	BIS C-873-1-008-003-3001
BIS C-870-1-008-004-3001	BIS C-871-1-008-004-3001	BIS C-873-1-008-004-3001
BIS C-870-1-008-005-3001	BIS C-871-1-008-005-3001	BIS C-873-1-008-005-3001
52 buttons, alphanumeric	52 buttons, alphanumeric	52 buttons, alphanumeric
TFT Touchscreen display	TFT Touchscreen display	TFT Touchscreen display
3.7 V rechargeable battery pack	3.7 V rechargeable battery pack	3.7 V rechargeable battery pack
4000 mA/h	4000 mA/h	4000 mA/h
RS232/Balluff Dialog	RS232/Balluff Dialog	RS232/Balluff Dialog
–10...+50 °C	–10...+50 °C	–10...+50 °C
IP 65	IP 65	IP 65
Integrated	Integrated	Integrated
Charging power supply and stylus	Charging power supply and stylus	Charging power supply and stylus
for BIS C-Data carrier with round coil Ø ≥ 35 mm	for BIS C-Data carrier with rod antenna	for BIS C-Data carrier with round coil Ø ≤ 34 mm
Docking Station and Pistol Grip	Docking Station and Pistol Grip	Docking Station and Pistol Grip

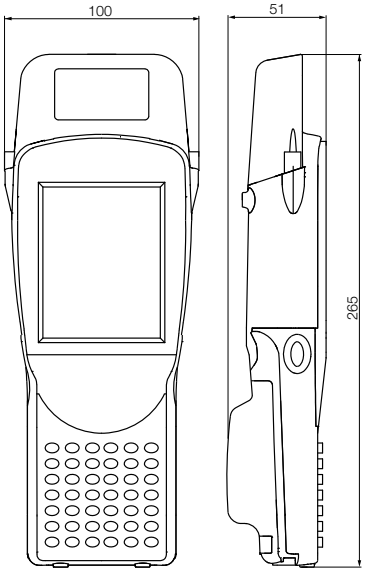

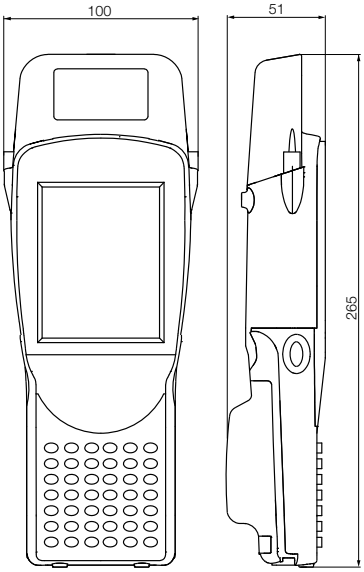

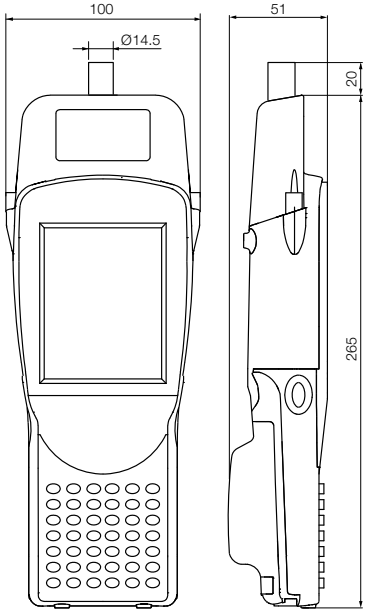

BIS Portal Software Version

For enhanced operating convenience

Allows portable writing and reading of BIS C data carriers.
Easy operation thanks to:
- Touchscreen with large Windows CE® color display
- Pre-installed Balluff software and keyboard or stylus
- Additional pre-installed user-configurable BIS Portal advanced operation and GUI software for customized user screens and data handling options, including bar code reading integration.

Ideal for mobile conditions and challenging environments. Data transfer via optional WLAN or wired USB. The handheld is also modular for expandability.

Additional options:
A pistol grip and desktop docking/charging station.

BISPortal software program provides data formatting and screens, bar code reading and data queries. See page 234 for details.

Antenna type		
Function		
Housing material		
Standard base	**Ordering code**	
	Part number	
Standard + WLAN module	**Ordering code**	
	Part number	
Standard + 1D code reader	**Ordering code**	
	Part number	
Standard + 2D code reader	**Ordering code**	
	Part number	
Standard + ID code reader + WLAN	**Ordering code**	
	Part number	
Standard +2D code reader + WLAN	**Ordering code**	
	Part number	
Keyboard		
Display		
Supply voltage		
Capacity		
Interface		
Working temperature		
Degree of protection in accordance with IEC 60529		
Read/write head option		
Accessories included		
Appropriate data carrier		
Please order additional accessories separately		

Antenna type:

rod

round

Handheld Standard **BIS C-87_-1-008-x-000_**
Includes charger and stylus

Recommended accessories
(please order separately)

Description	Pistol grip option	Optional docking station with power supply	Replacement battery 4000mAh rechargeable battery
Part code	**FHW0004**	**FHW0003**	**WA3010**
Part number	11023836	11023834	162936

BIS C Industrial RFID System

Standard handheld with software

General purpose	Rod	Tool ID
Read/write	Read/write	Read/write
ABS	ABS	ABS
BAE00JZ		**BAE00J5**
BIS C-870-1-008-000-3002	BIS C-871-1-008-000-3002	BIS C-873-1-008-000-3002
BIS C-870-1-008-001-3002	BIS C-871-1-008-001-3002	BIS C-873-1-008-001-3002
BIS C-870-1-008-002-3002	BIS C-871-1-008-002-3002	BIS C-873-1-008-002-3002
BIS C-870-1-008-003-3002	BIS C-871-1-008-003-3002	BIS C-873-1-008-003-3002
BIS C-870-1-008-004-3002	BIS C-871-1-008-004-3002	BIS C-873-1-008-004-3002
		BAE00KT
BIS C-870-1-008-005-3002	BIS C-871-1-008-005-3002	BIS C-873-1-008-005-3002
52 buttons, alphanumeric	52 buttons, alphanumeric	52 buttons, alphanumeric
TFT Touchscreen display	TFT Touchscreen display	TFT Touchscreen display
3.7 V rechargeable battery pack	3.7 V rechargeable battery pack	3.7 V rechargeable battery pack
4000 mA/h	4000 mA/h	4000 mA/h
RS232/Balluff Dialog	RS232/Balluff Dialog	RS232/Balluff Dialog
–10...+50 °C	–10...+50 °C	–10...+50 °C
IP 65	IP 65	IP 65
Integrated	Integrated	Integrated
Charging power supply and stylus	Charging power supply and stylus	Charging power supply and stylus
for BIS C-Data carrier with round coil Ø ≥ 35 mm	for BIS C-Data carrier with rod antenna	for BIS C-Data carrier with round coil Ø ≤ 34 mm
Docking Station and Pistol Grip	Docking Station and Pistol Grip	Docking Station and Pistol Grip

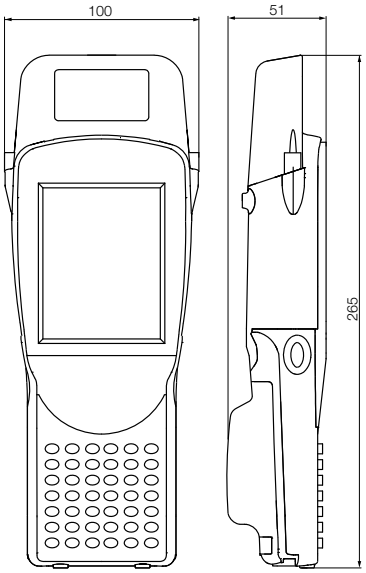

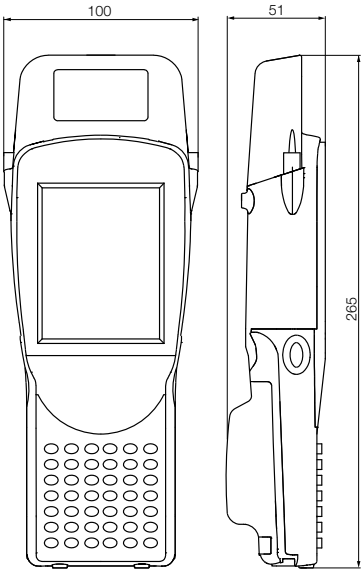

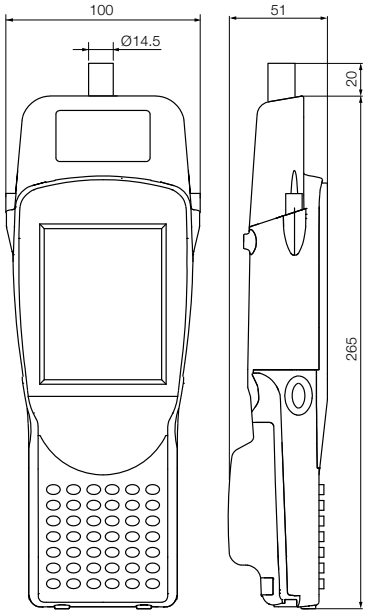

Mobile ID Solutions Software

Data displayed the way you want it
When you require a way to see your critical RFID based data in a legible and logical manner using a mobile device, having a data display solution you can customize without a great deal of time, expense or programing expertise is the answer.

The BIS Template Software solution for Balluff's handhelds allows you to access the data on your RFID tags and display it the way you want it, maximizing access and increasing visibility to your process. It allows you to read and write data to the tag and store or transfer that data to and from the handheld using a simple to customize and easy to understand software interface.

The BISPortal software solution for Balluff's handhelds allows you to get data from your RFID tags and bar codes, then display and search it the way you want, maximizing access and increasing visibility to your process. It allows you to read data from a tag or bar code, write data to a tag, easily search the read data, compare data to a onboard user created database and store or transfer that data to and from the handheld using a simple to customize and easy to understand software interface.

Simple to customize
The Template software has a simple Windows™ PC based configuration interface that uses menu driven, pull-down selection options to configure and display your RFID tags data in a logical and application specific manner. You decide and configure customized descriptions and what format your data is shown in without the need for any programming.

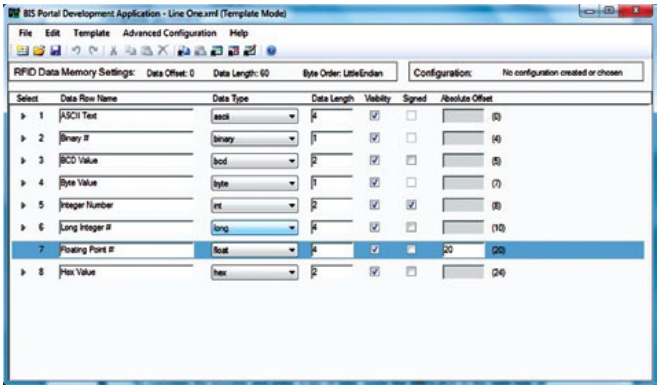

Windows™ PC template Development Application interface

Template driven
The BIS Portal Development Application uses a simple template configuration method to define the RFID and bar code data and setup the way in which that data will be displayed. Using a template format makes it a simple to understand configuration method, allowing you to create your own customized handheld data screens. No need to do your own programming or hire an integrator. This software also makes configuring and uploading your data to the handheld just as easy.

RFID data display types include:
- ASCII
- Binary
- BCD
- Byte
- Integer
- Long integer
- Floating point
- Hexadecimal

Template Software Solution

Benefits of BIS Template software
- Access your RFID data anywhere using a mobile handheld solution.
- Display RFID data the way you want to see it.
- No programming or integration required!

Customizable data display
- Data can be displayed using different data formats.
- Raw data can be grouped together and displayed using defined rows.
- User defined descriptions on each row for easy data identification.

Simple display configuration
- Configure a data "template" using the simple PC configuration interface program.
- Transfer the template to the handheld using the PC interface and USB connection.
- Use the automatically installed icon on the handheld's interface desktop to begin using the created template.

Balluff Tool ID compatibility
The Template software combined with our BIS Tool ID RFID hardware provides a powerful mobile solution to access Tool ID tag data anywhere on the shop floor with the greatest flexibility.

With the use of this software and a Tool ID RFID tag antenna on a handheld, Tool ID data can be accessed, customized and seen the way you need it. Provide unparalleled mobile access to the Tool data at the machine on the shop floor, tool crib, or anywhere in between.

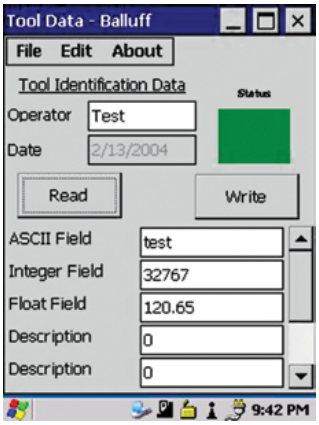

Handheld data display and interface

Portal Software Solution

Benefits of BISPortal software
- Access your RFID and bar code data anywhere using a mobile handheld solution.
- Display and query RFID and bar code data the way you want.
- No programming or integration required!

Customizable data display
- Data can be displayed using different data formats.
- Raw data can be grouped together and displayed using defined rows.
- User defined descriptions on each row make it easy for data identification.

Simple display configuration
- Configure a data "template" using the simple PC configuration interface program.
- Create multiple templates for different applications.
- Easily transfer templates and databases to the handheld using the PC interface and USB connection.

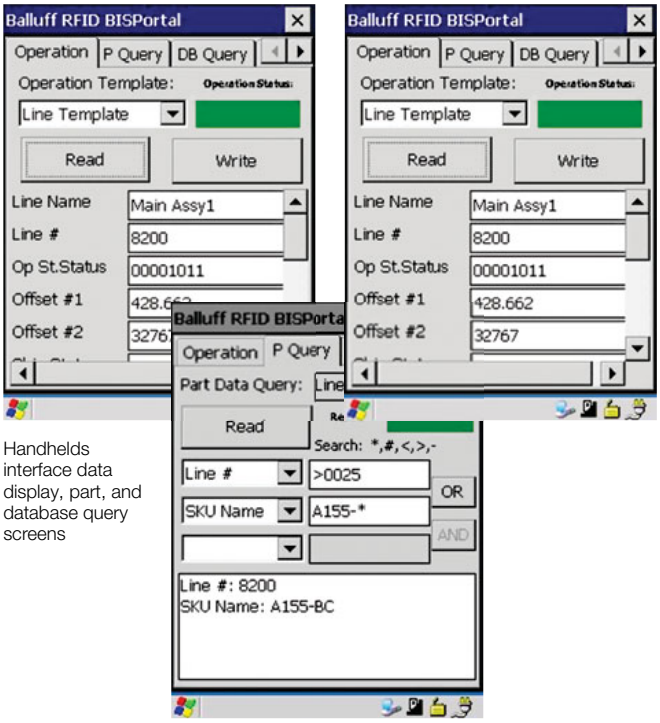

Handhelds interface data display, part, and database query screens

Handy programmer

Dimensions	**Ø 14.5x63 mm**	**Ø 30×66 mm**	**72x27x27 mm**	
Housing material	CuZn	POM	PVC	
Function	Read/write head	Read/write head	Read/write head	Adapter cable
Ordering code	**BAE0095**	**BAE0096**	**BAE0097**	**BAE0094**
Part number	BIS C-851	BIS C-852	BIS C-853	BIS C-850
Operating temperature	0...+70 °C	0...+70 °C	0...+70 °C	0...+70 °C
Storage temperature	-20...+85 °C	–20...+85 °C	–20...+85 °C	–20...+85 °C
Protection per IEC 60529	IP 67	IP 67	IP 67	IP 67
Read head connection	6.3 mm jack socket	6.3 mm jack socket	6.3 mm jack socket	6.3 mm jack socket
Connection to	BIS C-810 BIS C-820 BIS C-720	BIS C-810 BIS C-820 BIS C-720	BIS C-810 BIS C-820 BIS C-720	BIS C-810 BIS C-820 BIS C-720
Appropriate data carrier	BIS C-100_ _ BIS C-103_ _ BIS C-105_ _ BIS C-121_ _ BIS C-122_ _	BIS C-100_ _ BIS C-104_ _ BIS C-108_ _ BIS C-117_ _ BIS C-128_ _ BIS C-130_ _ BIS C-190_ _ BIS C-191_ _	BIS C-150-_ _/A	Adapter cable for handy programmer or portable device and all read/write heads with M12 connector.

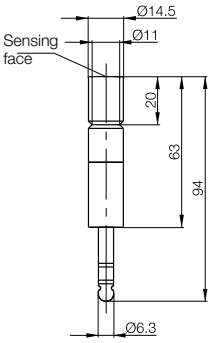

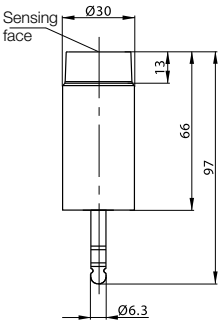

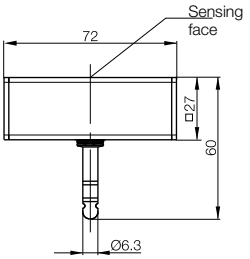

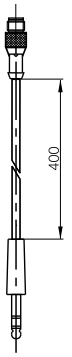

BIS C Industrial RFID System

Handy programmer

Function	Read/write	Read/write
Housing material	ABS	ABS
Ordering code	**BAE0088**	**BAE008C**
Part number	BIS C-810-0-003	BIS C-820-0-004-D
Keyboard	32 buttons, alphanumeric	1 key
Display	LCD-display, 20 characters/4 line	2 LED status/battery
Current	2.4 V rechargeable battery pack NiMH	2× R6 AA rechargeable NiMH
Capacity	1500 mA/h	800 mA/h
Interface	RS232/Balluff Dialog	RS232/Balluff Dialog
Operating temperature	0...+50 °C	0...+50 °C
Protection per IEC 60529	IP 40	IP 40
Read head connection	1× 6.3 mm jack socket	1× 6.3 mm jack socket
Accessories	Carrying case included	

For maximum flexibility
The handy programmer with read/write function helps you stay mobile and independent. Benefit from increased mobility during repair work, for example. The handy programmer is fitted with an interface for connection to a PC.

Option of customizing menu buttons.

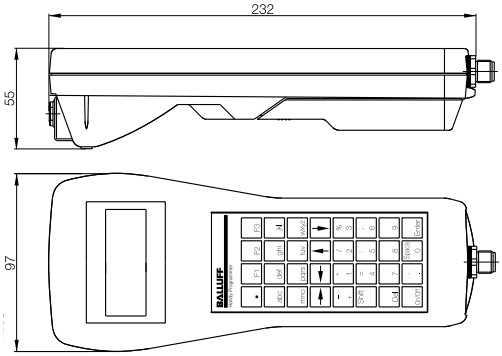

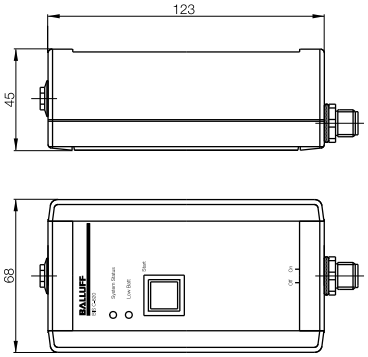

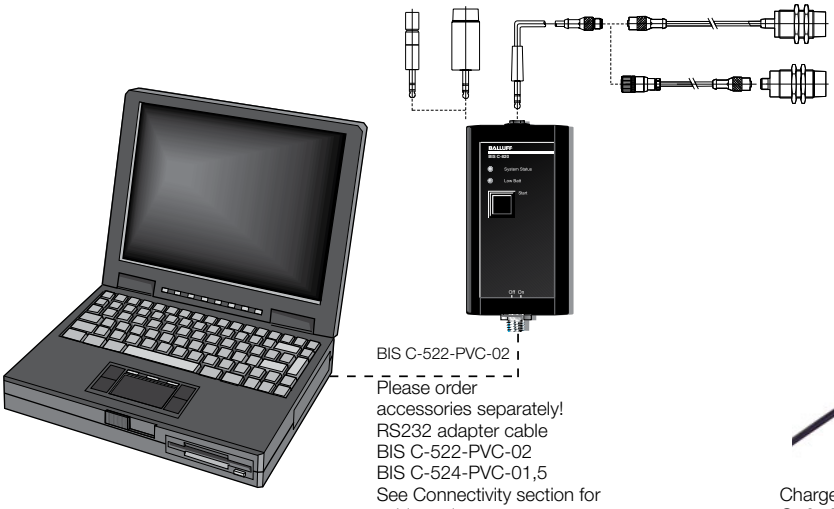

BIS C-522-PVC-02
Please order accessories separately!
RS232 adapter cable
BIS C-522-PVC-02
BIS C-524-PVC-01,5
See Connectivity section for cable options.

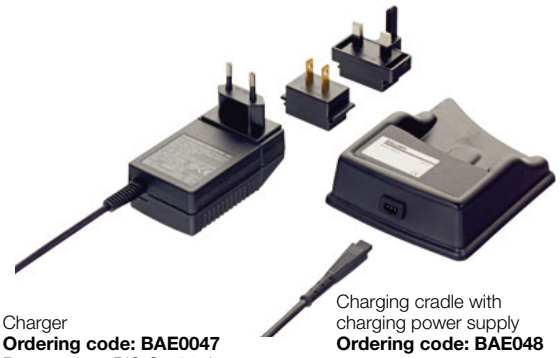

Charger
Ordering code: BAE0047
Part number: BIS C-701-A

Charging cradle with charging power supply
Ordering code: BAE048
Part number: BIS C-702-A

Read/write gun

Outstanding operating comfort

Benefit from the advantages of the ergonomic pistol grip with the option of attaching three different read/write heads. The pistol grip rests snugly in your hand while you activate a read/write function at the press of a button. LEDs and an integral buzzer signal the end of the read/write process.

Housing material	PA 66
Ordering code	**BAE004C**
Part number	BIS C-720-01-03
Keyboard	1 key
Display	1 LED
Operating temperature	0...+70 °C
Storage temperature	-20...+85 °C
Protection per DIN 40 050	IP 40
Read head connection	6.3 mm jack socket
Coiled cable extended	3 m
Connection to	Processor and PLC

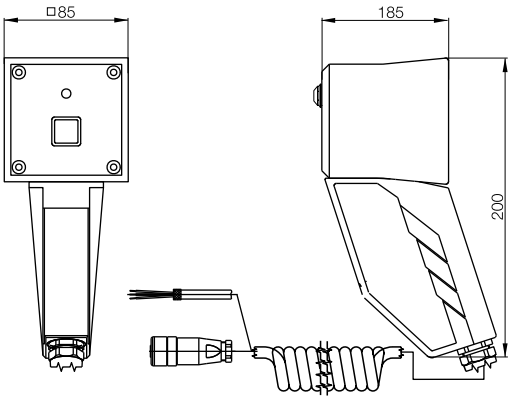

See read/write head attachments on page 218.

Version	Access protection	Data carrier
Use	Attachment for read/write head BIS C-300	
Ordering code	**BAM012C**	**BIS002Y**
Part number	BIS C-300-ZA1	BIS C-122-04/L-ZC1
Operating temperature	0...+70 °C	–25...+70 °C
Storage temperature	–20...+85 °C	–25...+85 °C
Protection per IEC 60529		IP 67

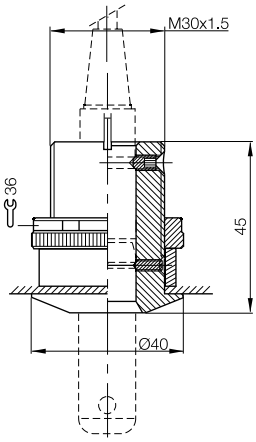

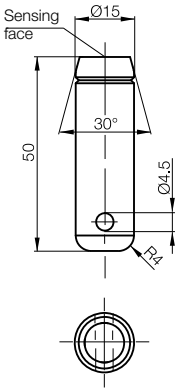

Access protection

And here's how it works

Individual access codes are allocated via programmable data keys, which can then be disabled to prevent further programming.

Unauthorized personnel cannot manipulate the data key as a result. The data key is read via an antenna fitted to a special bracket. The processor unit then issues the data.

Different interfaces such as serial, PROFIBUS, INTERBUS, DeviceNet™, Ethernet/IP or parallel interfaces enable simple connection to the monitored system. Available for systems BIS C, BIS L and BIS M.

The benefits to you

Simple upgrade and rapid replacement without modifying the system software. End users are independent of system providers. The access system is easy to integrate in read/write stations that already use an identification system. Simply connect the access monitoring antenna to the second channel on the existing processor unit. Hardware expenses are reduced to a minimum and software only requires slight modification in order to process both channels.

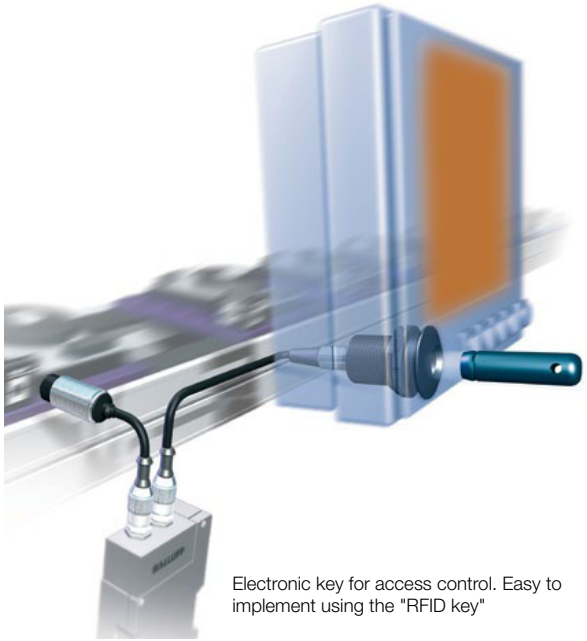

Electronic key for access control. Easy to implement using the "RFID key"

BIS S Industrial RFID System

Inductive Identification

The BIS S system uses a Dual Frequency 3.65MHz read and 560KHz write inductively coupled technology along with passive tags to provide short range RFID solutions up to 50mm for applications that require high capacity memory for up to 32k bytes of data. This system was specially designed for WIP (work in process) or production control such as palletized production and quality traceability applications. This system is used on metal and provides hardened re-usable tagging options.

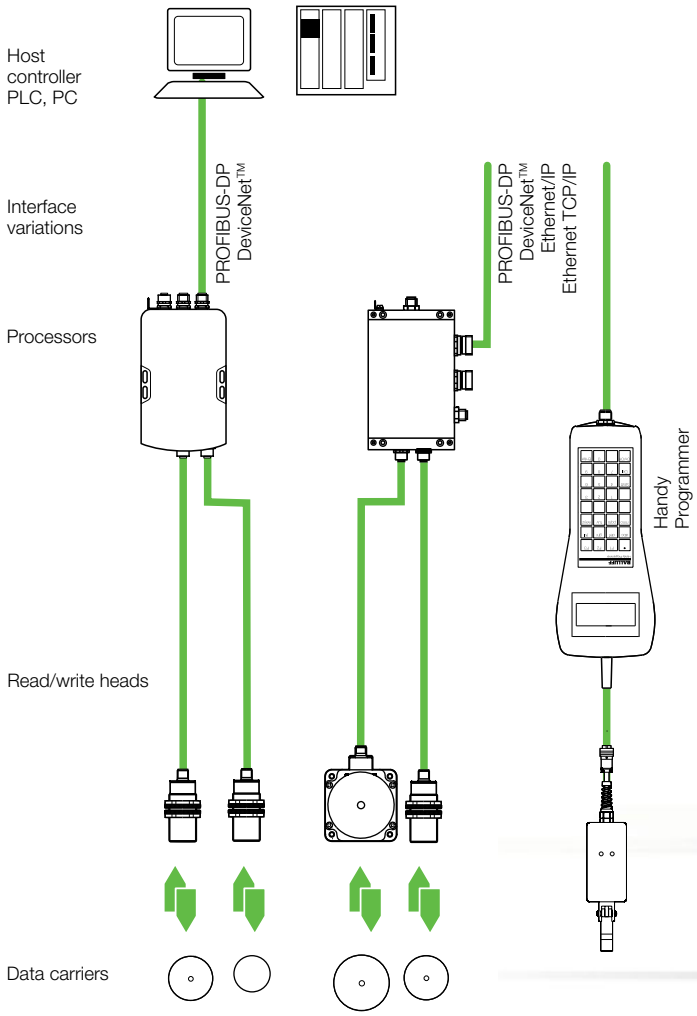

BIS S Industrial RFID Systems
Inductive identification

Data carriers read/write	242
Read/write heads	244
Processors	246
Handy programmer	252

560 kHz/
3.65 MHz HF

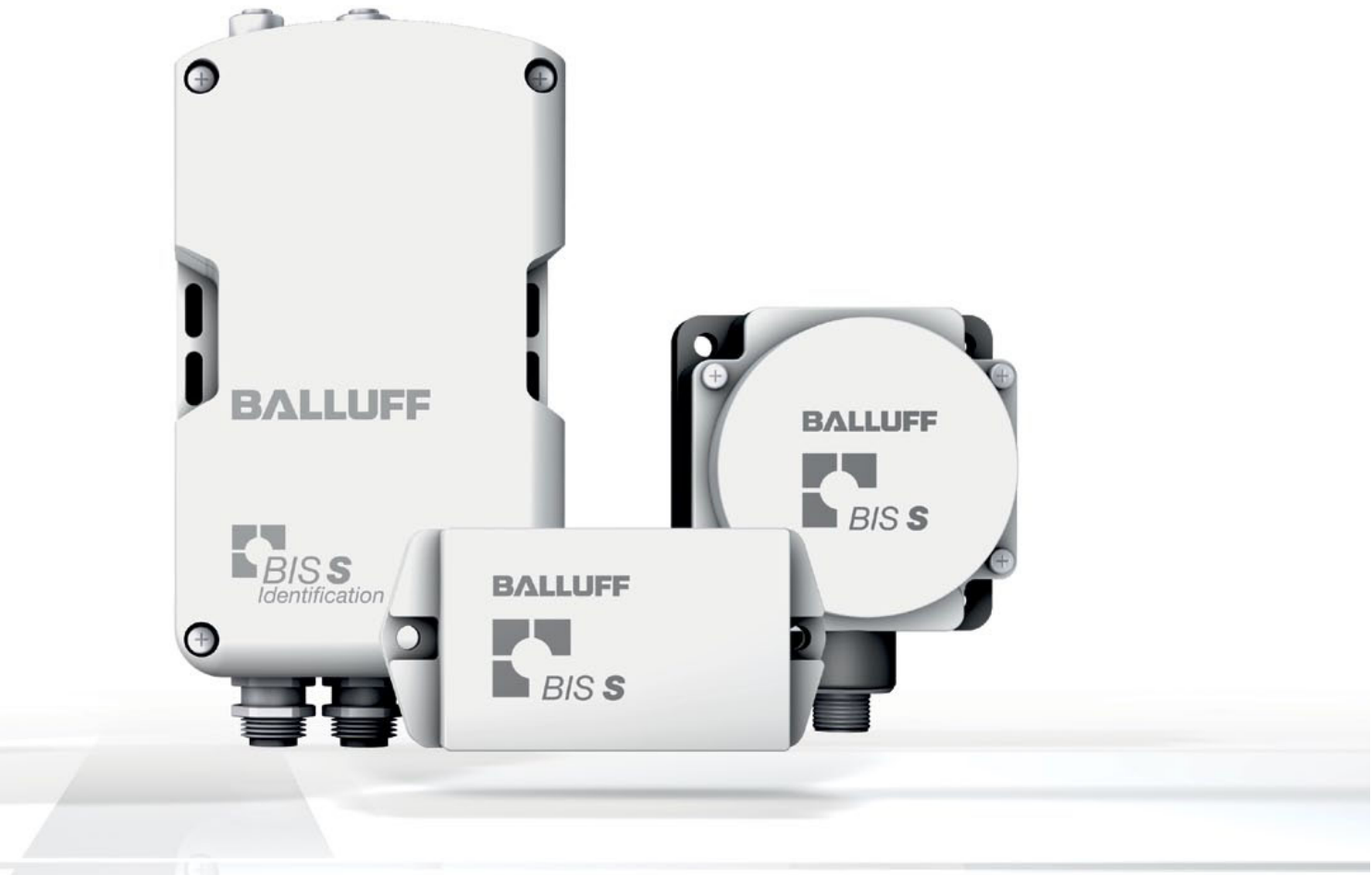

Technical information and definitions can be found on **page 354**

Benefit from a large storage capacity

Dimensions	**52×32×11 mm**
Housing material	PBTP
Weight	27 g

BIS S Programmable

8 kBytes	**Ordering code**	**BIS004J**
	Part number	BIS S-108-32/L
16 kBytes	**Ordering code**	**BIS004K**
	Part number	BIS S-108-42/L
32 kBytes	**Ordering code**	**BIS004L**
	Part number	BIS S-108-52/L
Operating temperature		0...+70 °C
Storage temperature		–20...+85 °C
Protection per IEC 60529		IP 67

Appropriate read/write head with max. read/write distance

Mounting	
BIS S-301	30 mm
BIS S-302	20 mm
BIS S-303	20 mm

For installation see technical section.

Mounting (see technical section for details):

flush in steel

non-flush on steel

non-metal

Antenna type:

rod

round

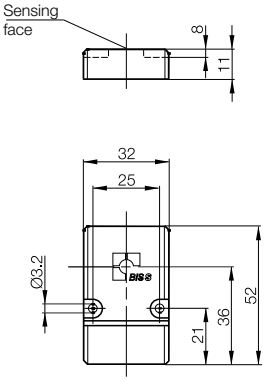

Dimensions	**80x40x22 mm**
Housing material	POM
Weight	93 g

BIS S Programmable

16 kBytes	**Ordering code**	**BIS004N**
	Part number	BIS S-150-42/A
32 kBytes	**Ordering code**	**BIS004P**
	Part number	BIS S-150-52/A
Operating temperature		0...+70 °C
Storage temperature		–20...+85 °C
Protection per IEC 60529		IP 67

Appropriate read/write head with max. read/write distance

Mounting	
BIS S-301	50 mm

For installation see technical section.

Mounting (see technical section for details):

flush in steel

non-flush on steel

non-metal

Antenna type:

rod

round

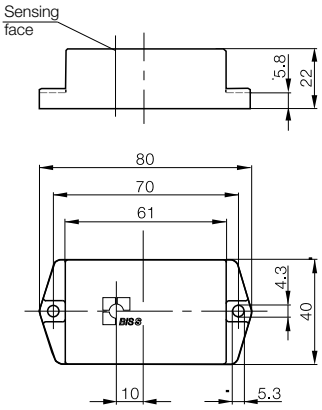

First choice in static applications involving large quantities of data

Dimensions	
Housing material	
Ordering code	
Part number	
Mounting	
Operating temperature	
Storage temperature	
Protection per IEC 60529	
Connection to	
Connection cable	

Appropriate data carrier

Mounting		
Write distance in mm		
Read distance in mm		
Offset in mm at distance	5 mm	
	7 mm	
	10 mm	
	15 mm	
	20 mm	
	30 mm	
	50 mm	

Example:

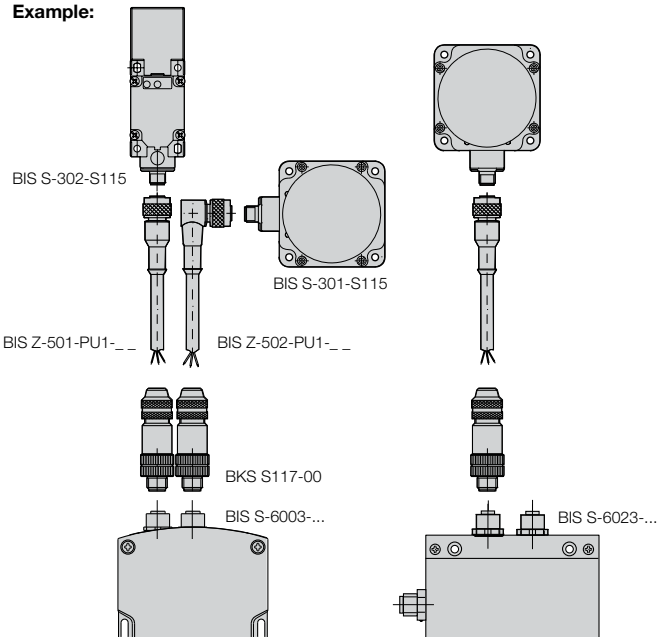

For installation see technical section.

Connector orientation

Mounting (see technical section for details):

flush in steel

non-flush on steel

non-metal

Antenna type:

rod

round

	40×40×138 mm	**40×40×138 mm**	**80×80×40 mm**
	ABS	ABS	PBT and ABS
	BIS005R	**BIS005T**	**BIS005F**
	BIS S-302-S115	BIS S-303-S115	BIS S-301-S115
	0...+70 °C	0...+70 °C	0...+50 °C
	–20...+85 °C	–20...+85 °C	–20...+85 °C
	IP 67	IP 67	IP 67
	Processor	Processor	Processor
	See Connectivity section for cable options	See Connectivity section for cable options	See Connectivity section for cable options
	see data carriers BIS S-108-_ _/L	**see data carriers** BIS S-108-_ _/L	**see data carriers** BIS S-150-_ _/A
			see data carriers BIS S-108-_ _/L
	5-20	5-20	10-50
	5-20	5-20	10-50
	±5	±5	±5
	±5	±5	±5
	±5	±5	±5
	±5	±5	±5
	±5	±5	±5
			±5
			±5

	5-30
	5-30
	±5
	±5
	±5
	±5
	±5
	±5

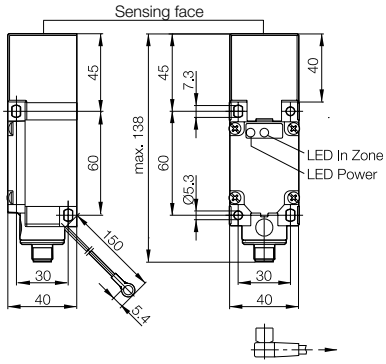

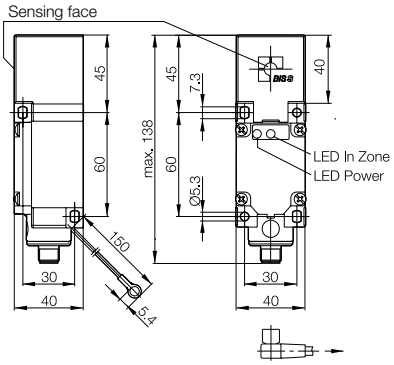

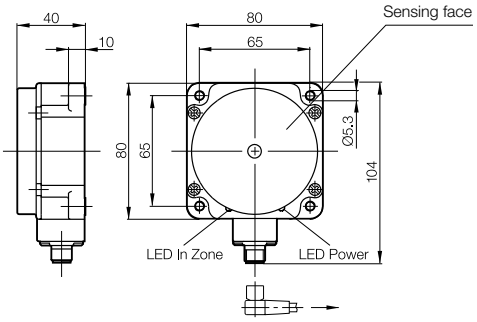

PROFIBUS-DP

Cost-effective identification – operate 2 read/write heads simultaneously

- Selectable division of the data width on the PROFIBUS-DP, 4 to 128 bytes
- Free assigning of the data width for each read/write head
- Optimum data speed, internal cycle time is shorter than the BUS activation time
- Service-friendly, all parameter data are stored in an interchangeable memory
- BUS address selectable with switches
- Accepts all read/write heads
- Interface-compatible with BIS C and BIS L identification systems

Description		
PROFIBUS-DP	**Ordering code**	
	Part number	
Supply voltage, Ripple		
Current		
Operating temperature		
Storage temperature		
Protection per IEC 60529		
Read/write head ports		
Service interface		
Connection for		
Connection type		
Accessories included		
Connection cable		

The compact **class BIS -600_** with its reduced dimensions and various interface options can be used wherever ambient conditions require higher protection.

The devices are ideal for IP 65 and applications involving media that is not aggressive to PS plastic.

Small, compact, flexible and economical

Processors

Processor	Processor
BIS00F3	**BIS00F5**
BIS S-6002-019-050-03-ST11	BIS S-6022-019-050-03-ST14
24 V DC ±20 %, ≤ 10 %	24 V DC ±20 %, ≤ 10 %
≤ 600 mA	≤ 600 mA
0...+60 °C	0...+60 °C
0...+60 °C	0...+60 °C
IP 65/NEMA 12	IP 65/NEMA 12
2 external	2 external
RS232	RS232
2 read/write heads BIS S-3_ _	2 read/write heads BIS S-3_ _
2 connectors round 5-pin, B-coded,	2 connectors round 5-pin, B-coded,
1 connector round 5-pin	2 connector round 5-pin
Software GSD file	Software GSD file
See Connectivity section for cable options	See Connectivity section for cable options

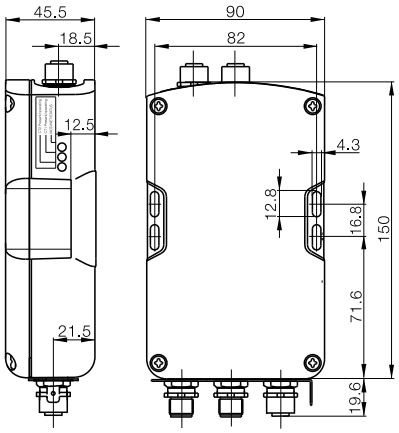

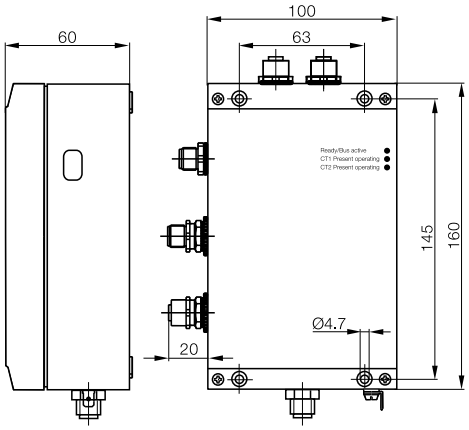

Threaded cover
Ordering code: BAM0114
Part number: BKS 12-CS-01
coded for M12 B connector type

The **ruggedized version**
BIS S-602_ is in spite
of the mechanically rugged die-cast
aluminum housing
a small, flexible processor which is available with various interface options.

Suitable for all applications with demanding requirements for mechanical stability and chemical resistance.

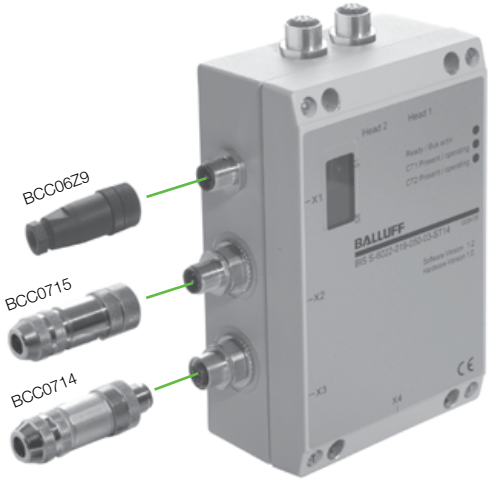

Cost-effective identification – operate 2 read/write heads simultaneously

- Freely selectable buffer size between 0 and 256 bytes
- Service-friendly, all parameter data are stored in an interchangeable memory
- Accepts all read/write heads
- Interface-compatible with BIS C and BIS L identification systems

Description		
DeviceNet	**Ordering code**	
	Part number	
Supply voltage, Ripple		
Current		
Operating temperature		
Storage temperature		
Protection per IEC 60529		
Read/write head ports		
Service interface		
Connection for		
Connection type		
Accessories included		
Connection cable		

The **compact class BIS -600_** with its reduced dimensions and various interface options can be used wherever ambient conditions require higher protection.

The devices are ideal for IP 65 and applications involving media that is not aggressive to PS plastic.

Small, compact, flexible and economical

Processors

Processor	Processor
BIS00F4	**BIS00F6**
BIS S-6003-025-050-03-ST12	BIS S-6023-025-050-03-ST13
24 V DC ±20 %, ≤ 10 %	24 V DC ±20 %, ≤ 10 %
≤ 600 mA	≤ 600 mA
0...+60 °C	0...+60 °C
0...+60 °C	0...+60 °C
IP 65/NEMA 12	IP 65/NEMA 12
2 external	2 external
RS232	RS232
2 read/write heads BIS S-3_ _	2 read/write heads BIS S-3_ _
3 connectors round 5-pin	4 connectors round 5-pin
Software EDS file	Software EDS file
See Connectivity section for cable options	See Connectivity section for cable options

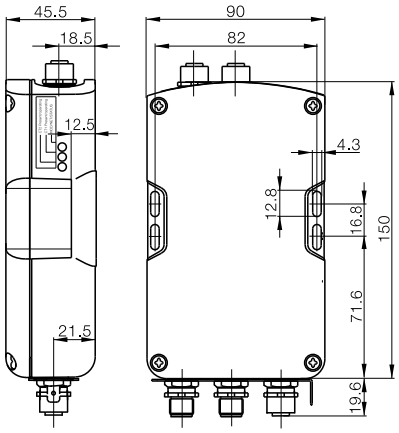

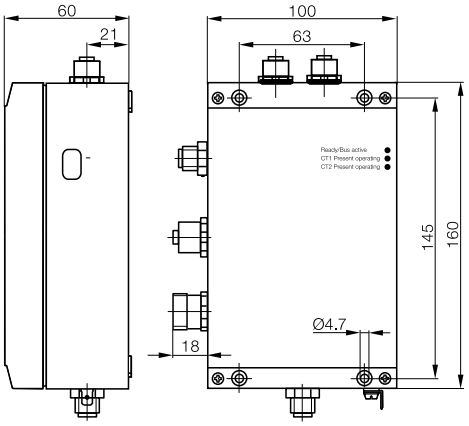

The **ruggedized version BIS S-602 _** is in spite of the mechanically rugged die-cast aluminum housing a small, flexible processor which is available with various interface options.

Suitable for all applications with demanding requirements for mechanical stability and chemical resistance.

Description		Processor
EtherNet/IP	**Ordering code**	**BIS00F7**
	Part number	BIS S-6026-034-050-06-ST19
Supply voltage, Ripple		24 V DC ±20 %, ≤ 10 %
Current		≤ 400 mA
Operating temperature		0...+60 °C
Storage temperature		0...+60 °C
Protection per IEC 60529		IP 65
Read/write head ports		2 external
Service interface		yes
Connection for		Read/write heads BIS S-3_ _
Connection type		Connector round 4-pin, D-coded 1 connector 5-pin 1 connector 4-pin
Accessories included		Configuration software
Connection cable		See Connectivity section for cable options

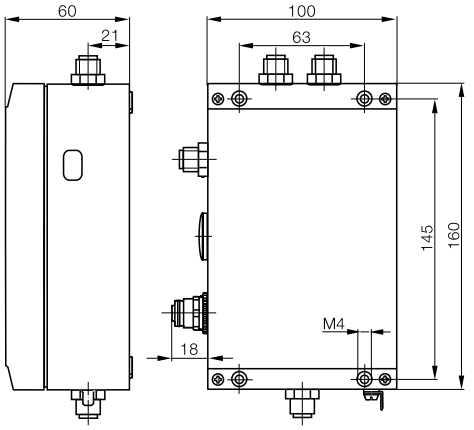

EtherNet TCP/IP

BIS S Industrial RFID Systems
Processors

Description		Processor
EtherNet TCP/IP	**Ordering code**	**BIS00F8**
	Part number	BIS S-6027-039-050-06-ST19
Supply voltage, Ripple		24 V DC ±20 %, ≤ 10 %
Current		≤ 400 mA
Operating temperature		0...+50 °C
Storage temperature		0...+50 °C
Protection per IEC 60529		IP 65
Read/write head ports		2 external
Service interface		yes
Connection for		Read/write heads BIS S-3_ _
Connection type		Connector round 4-pin, D-coded 1 connector 5-pin 1 connector 4-pin
Accessories included		Configuration software
Connection cable		See Connectivity section for cable options

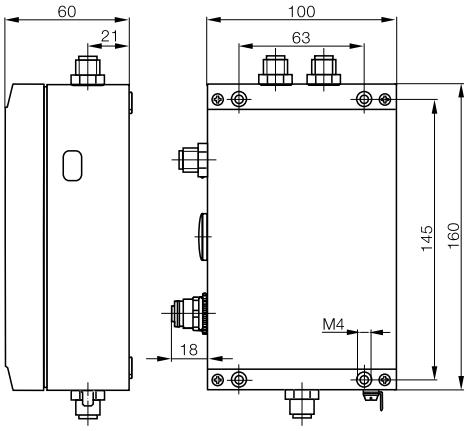

Handy programmer

For maximum flexibility

Benefit from increased mobility during repair work. The handy programmer with read/write function helps you stay mobile and independent. The handy programmer is fitted with an interface to a PC.

Function	
Dimensions	
Housing material	
Ordering code	
Part number	
Keyboard	
Display	
Current	
Capacity	
Interface	
Operating temperature	
Storage temperature	
Protection per IEC 60529	
Read head connection	
Connection to	
Accessories	

Appropriate data carrier

Antenna type:

rod

round

Handy programmer

	Read/write heads	Read/write
	Ø 15×63	Ø
	Plastic	ABS
	BAE0098	**BAE008M**
	BIS S-850	BIS S-810-0-003
		32 buttons, alphanumeric
		LCD-display, 20 characters/4 lines
		2.4 V rechargeable battery pack NiMH
		1500 mA/h
		RS232/Balluff Dialog
	0...+40 °C	0...+50 °C
	–10...+50 °C	
	IP 54	IP 40
	Fixed plug 6-pin	Fixed socket 6-pin
	BIS S-810	
		Carrying case included
	BIS S-108_ _	
	BIS S-150_ _	

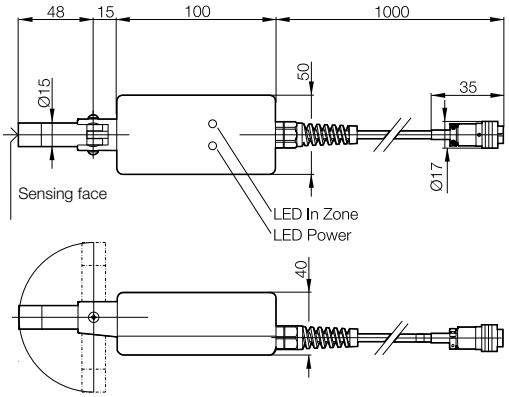

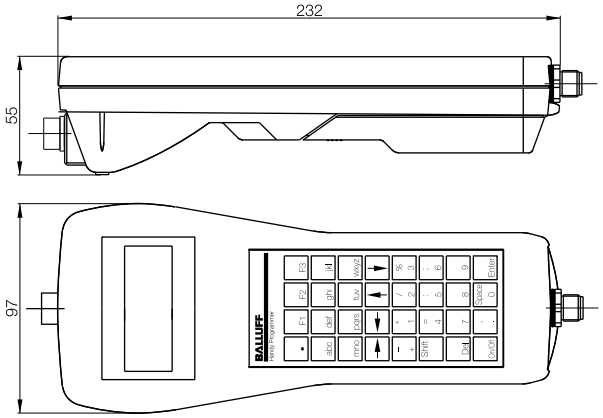

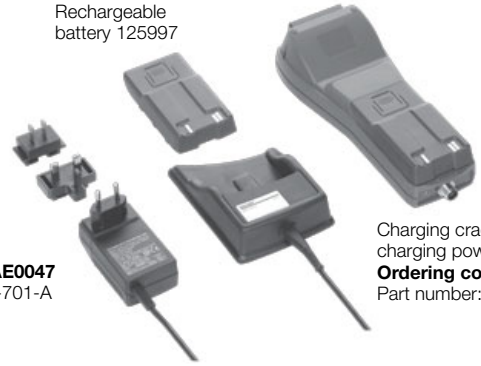

Rechargeable battery 125997

Charger
Ordering code: BAE0047
Part number: BIS C-701-A

Charging cradle with charging power supply
Ordering code: BAE0048
Part number: BIS C-702-A

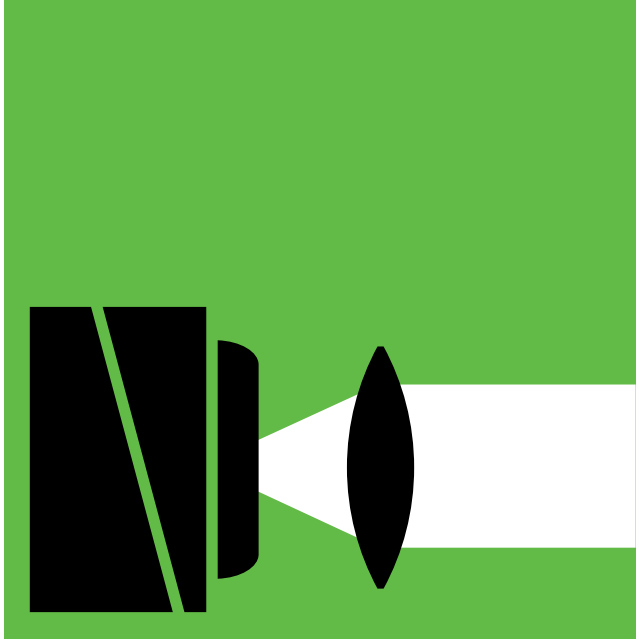

BVS Vision Sensors

Vision-based Identification

The Balluff BVS Vision Sensor is the perfect choice to insure a reliable, flexible and productivity increasing vision-based quality solution. The BVS offers a full tool box of advanced machine vision functions that can be combined to reliably solve error proofing, quality checking and bar code reading applications. With the BVS, recognizing defects on multiple part types early in the production process is possible using the same sensor. In-process inspection job changing eliminates sensor arrays and complex costly hardware, increasing reliability and quality while reducing overall costs.

BVS Vision Sensors
Vision-based identification

BVS Vision Sensors – Overview and examples	256
BVS-E Identification	264
BVS-E Standard	266
BVS-E Universal	268
BVS-E Vision Sensor Monitor	270
BAV Balluff Added-Value Kits	271

Technical information and definitions can be found on **page 354**

Easy to use
As simple as a sensor

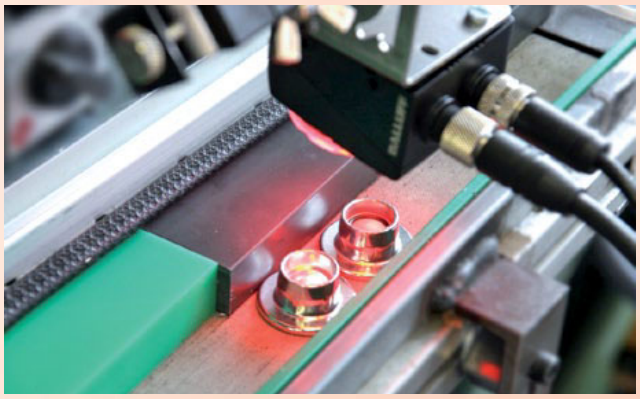

In most production situations, vision systems can be overkill – too expensive, too much functionality, and just too complex. Instead, Balluff Vision Sensors are easy to set up, simple to use, and quicker to return your initial investment.

The BVS Vision Sensor is a powerful error proofing tool that can be used in almost any area of your manufacturing process. It provides reliable part or feature presence/absence and position detection, plus dimension verification and accurate barcode reading with crisp and reliable resolution. The BVS has far more functionality than any discrete sensor, sensor array, or vision product in its class.

Reduces Costs
- Single-unit operation replaces expensive, cumbersome multi-sensor solutions
- Four models with multiple performance levels to choose from provide multiple price points based on functionality
- Single easy to use software package minimizes setup time and cuts startup costs
- Provides vision performance at smart sensor pricing

Increases Product Quality
- Eliminates unreliable manual inspection
- Allows 100% quality checking instead of audit checking
- Provides the resolution needed for reliable quality inspection
- Enables automated barcode reading

Increases Productivity
- Improves line speed and error proofing by eliminating the need for manual inspection
- Minimizes false code reads with very high code resolution for greater reliability
- Catches errors sooner to reduce unplanned downtime and scrap
- Reduces planned downtime with greater functionality and flexibility

BVS Vision Sensors

The best combination of vision sensing simplicity and functionality

BVS Vision Sensors – As simple as a sensor

BVS-E Identification

BVS-E Standard

BVS-E Advanced

BVS-E Universal

BVS-E Vision Sensor Monitor

BAV Balluff Added-Value Kits

BVS Vision Sensors

Product overview – The models at a glance

BVS will optimize your inspection process control, regardless of which version you use in your application. Benefits include greater efficiency and process reliability.

Each of these models are available in four different focal lengths, red or infrared light source and two or more digital outputs.

The following provides an overview of the different features and special functions to help you select the right Vision Sensor for your application.

There are four different model types available:

- **BVS-E Identification –**
  Easily and reliably read a large number of codes
- **BVS-E Standard –**
  Sensor of choice for simple error proofing tasks
- **BVS-E Universal –**
  versatile tools for demanding quality checking and part positioning
- **BVS-E Monitor –**
  a small and easy to use visualization accessory compatible for each BVS-E model

		BVS-E Identification	BVS-E Standard	BVS-E Universal
Features				
Tools		3	7	14
Features per inspection		up to 32	up to 32	up to 255
Connection		Single or networked by PC	Single or networked by PC	Single or networked by PC
Bus interface		Ethernet/RS232		Ethernet/RS232
Typical detection rate		up to 40 Hz	15 Hz	up to 40 Hz
Working distance	50...1000 mm	■	■	■
	180...1000 mm	■		■
Focal length	6 mm	■	■	■
	8 mm	■	■	■
	12 mm	■	■	■
	16 mm	■		■
Lighting	LED, red light	■	■	■
	LED, infrared	■	■	■
Degree of protection per IEC 60529		IP 54	IP 54	IP 54
Ambient temperature range T_a		-10...+55 °C	-10...+55 °C	-10...+55 °C
Digital outputs		2 (+1 optional)	3 (+1 optional)	2 (+1 optional)

Main applications	**Easily and reliably read 1D and 2D Codes or verify characters**	**For simple error proofing and quality checking tasks**	**Versatile tools for 360°error proofing, code reading, process control and part positioning**
The benefits to you	■ 1D codes: detects or reads most common barcodes ■ 2D codes: detects or reads Data Matrix codes ■ Verifies characters ■ Process results via RS232 or TCP/IP	■ Short setup times and convenient format change on the PC ■ Flexible adaptation to your process by simply activating the relevant inspections via the PLC control ■ Simultaneous checking of multiple features	■ Precisely locate and verify your part with 360° contour based tools ■ Position and processing results available via RS232 or TCP/IP ■ One versatile sensor with all functions
From page	**264**	**266**	**268**

BVS Vision Sensors
Tool overview

All variants include a mix of features. Define your application needs and select the right version according to its features. The BVS offers the best solutions in its product class for every application.

	BVS-E Identification	BVS-E Standard	BVS-E Universal
Check brightness ■ Identify different types and parts ■ Check illumination brightness ■ Detect the function of a display		■	■
Compare contrast ■ Monitor presence of labels ■ Detect a label ■ Check completeness		■	■
Count edges ■ Monitor the number of pins on ICs ■ Check threads for completeness ■ Monitor the quality of gear wheels		■	■
Compare width ■ Check for presence (e.g. lids) ■ Differentiate parts ■ Monitor location and orientation		■	■
Detect pattern ■ Check parts quality ■ Differentiate types	■	■	■
Check contour ■ Check for absence of burrs and flashing ■ Differential parts shapes		■	
Monitor position ■ Monitor level ■ Position parts and products ■ Position labels		■	■
360° defect finder ■ Quality check on parts ■ Completeness check of parts ■ Nominal/Actual comparison			■
360° contour count ■ Verify correct number of parts ■ Presence absence of parts (e.g. screws) ■ Filling control (e.g. blisters)			■
360° contour match ■ Robot control (via Ethernet interface) ■ Align parts independent from background			■
Compare character (OCV) ■ Check labels ■ Monitor printing (e.g. ensure correct dates for different lots) ■ Check logos	■		■
360° position detection ■ Align parts ■ Robot control (via Ethernet interface) ■ Inspection irrespective of the position			■
Detect and identify barcode and Data Matrix code ■ Code verification ■ Documentation of parts used ■ Verify characters	■		■

One software package – whichever BVS you use
The ConVis software detects the connected BVS vision sensor automatically. You can use the software to simulate all sensor models and establish whether an alternative sensor model is compatible with your application. The software guides you, step-by-step, through your sensor setup. The onscreen setup guide offers additional help for each step if you need it.

BVS-E Identification

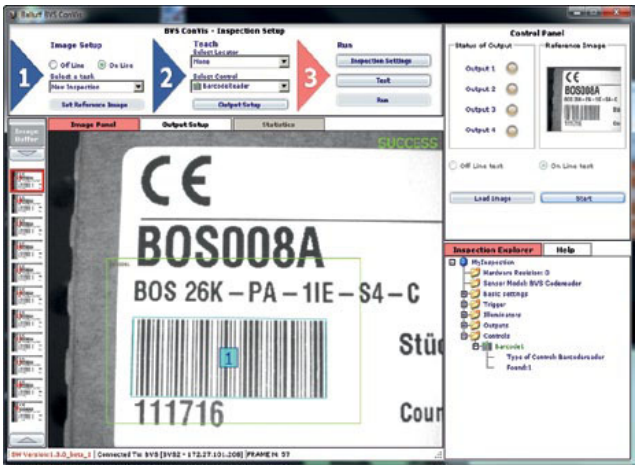

BVS-E Identification
This version allows you to detect and read all standard codes available on the market. Barcodes or Data Matrix codes within the field of view are read and inspected and/or output via the serial interface, depending on the settings. The large number of codes that the sensor can recognize allows you to use devices capable of reading varying code types.

BVS-E Standard

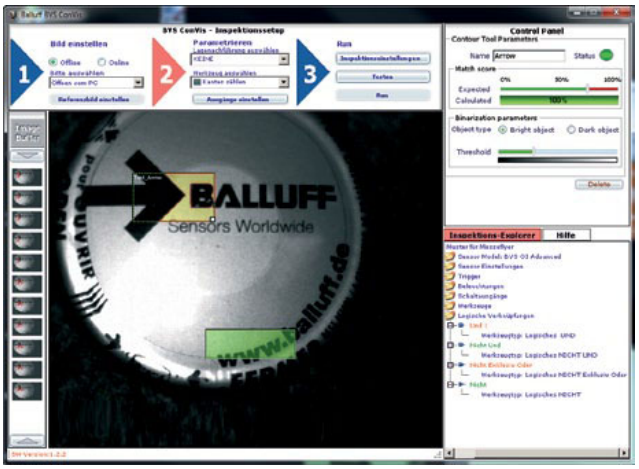

BVS-E Standard
The standard version of the Vision Sensor software has the following features: 20 inspection memory slots, free rotation of tools and a zoom function. You have the choice of seven independent tools. Needless to say, free software updates are included and existing sensors can be updated easily.

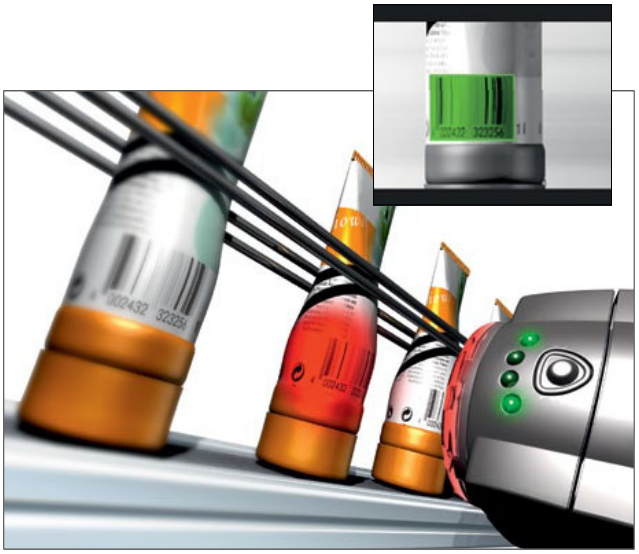

Detecting and reading barcodes
Barcodes are a way of uniquely identifying products during the manufacturing process. The BVS-E Identification incorporates two modes: 1. a taught-in barcode is inspected and an OK/NOK signal is output. 2. any code is read and output via the serial interface.

Detecting location
In the feeder on an oscillating conveyor, screws are provided for assembly. With the BVS you prevent problems, since incorrectly located screws or different screw types are immediately detected and shunted out.

BVS-E Universal

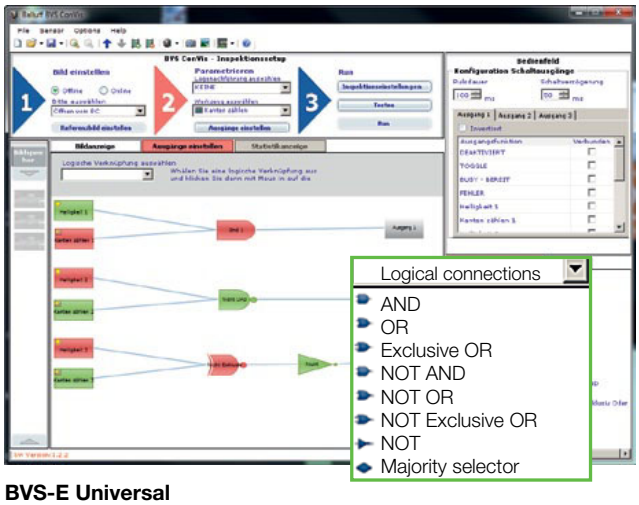

BVS-E Universal
The BVS-E Universal offers all the features of the standard version in addition to 360° position detection and logical linking. These features allow the combination of a maximum of 255 tools as well as full utilization of the digital outputs.

BVS-E Universal

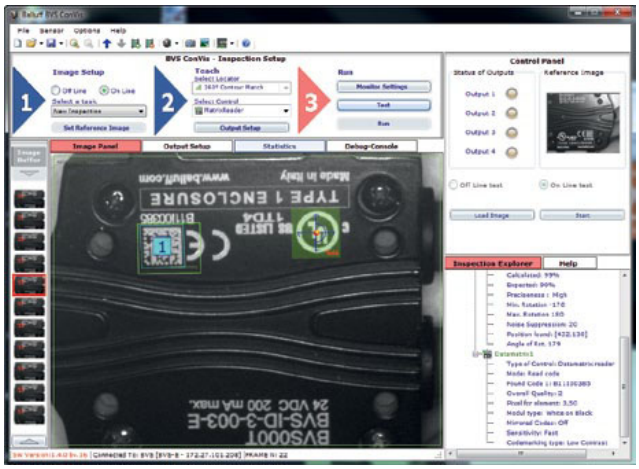

BVS-E Universal
The application range of the BVS Universal includes part presence checks, reading and verifying codes to demanding part positioning applications. The new powerful 360° contour match tools allow for the locating, verifying and counting of rotated parts in your application. The detected part location can then be transmitted to a PLC or Robot using the built in communication interface.

Checking for completeness
After manual assembly, the completeness of a product is checked. Three flexibly configurable outputs allow you for example to monitor the completeness of each series or special features.

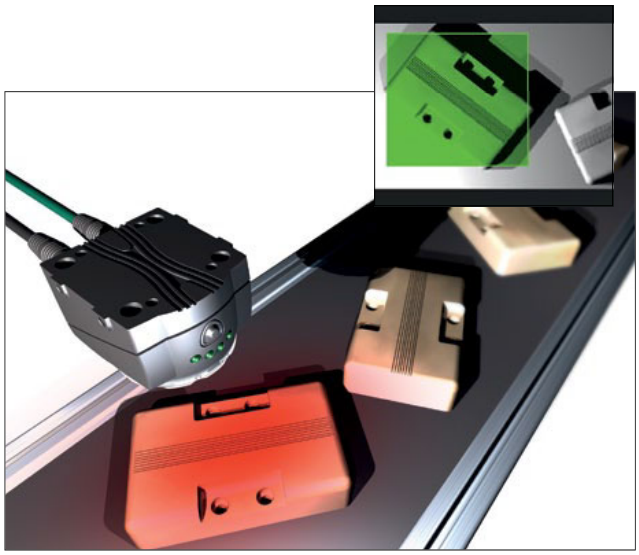

Check contour
Injection molded parts need to be checked at the inspection station: Defective parts or parts with flashing are shunted out for special rework.

Applications – Process reliability for automation

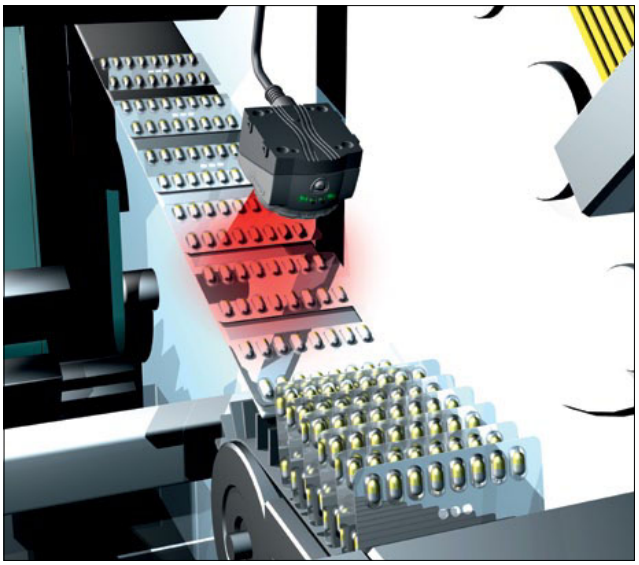

Checking blister filling
Tablet blisters are inspected after the automated filling process as a form of quality assurance measure. Check whether each nest is filled and the correct preparation is inserted. Reconfigurations, even in-process, are always possible. So you always remain flexible. Monitor your production using the BVS with absolute reliability.

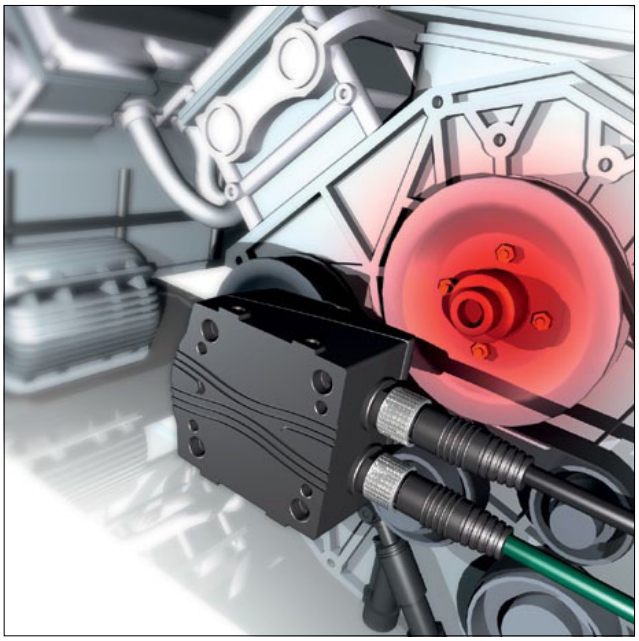

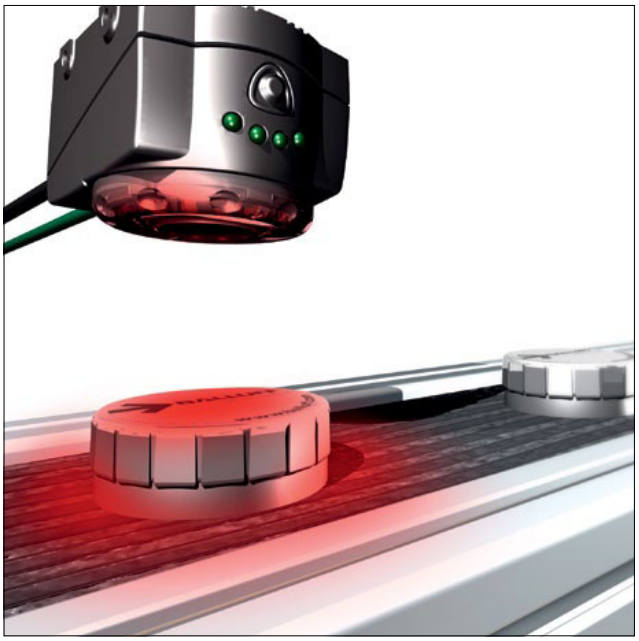

Checking for presence
V-belt pulleys are attached using four nuts. The Vision Sensor checks the presence of all nuts at any one time, simultaneously and independently of the alignment position.

Check labeling and correct positioning
Quality assurance requires that cans are checked for correct printing in any position. The 360 degree Contour match locates the can and also checks the print. It can be combined with other tool the BVS offers, so some could check if barcodes are readable or if the lables are correct. The position of the label can be found and sent via RS232 or Ethernet to a PLC or robot.

Checking bottle caps
To seal bottles perfectly, the cap needs to be seated correctly. Leave the inspection to our Vision Sensor. It checks positions absolutely reliably and reduces scrap while simultaneously increasing productivity. When formats are changed, reconfigurations are even possible in-process.

Detecting and reading Data Matrix codes
Data Matrix codes are used in industrial environments. This BVS tool also incorporates two modes: 1. a taught-in Data Matrix code is inspected and an OK/NOK signal is output. 2. any code is read and output via the serial interface so that you always know what is happening during the production process.

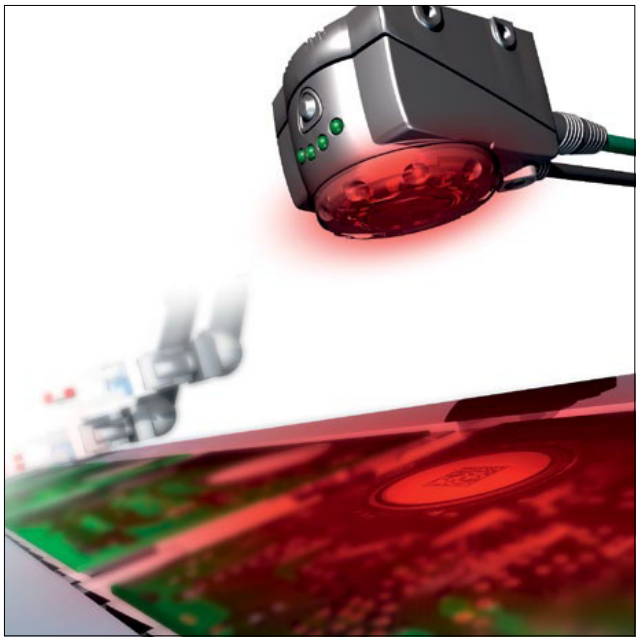

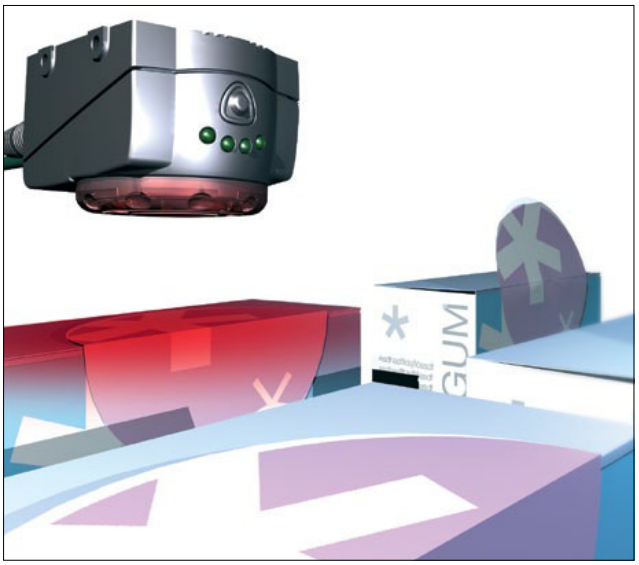

Verify position
Each package requires a label. But sometimes the label is located in the wrong place. With the BVS Vision Sensor you check exactly whether the label is present and whether it is properly applied.

Check the marking on your products. Regardless of whether you label them with 1D codes (barcodes) or 2D codes (Data Matrix codes), the BVS reads all common codes on the market. Text and sequences of numbers such as code plain text can be verified using OCV. The result: "*Inspection OK*" or "*Inspection not OK*".
If you need to view the read code data to find out which parts are being processed, you can output it via the RS232 or Ethernet interface.

- Simple operation
- Read several codes in an inspection simultaneously
- Output code data via RS232 or Ethernet interface
- Verify character strings
- Change between inspections via PLC
- Codes read in any position
- Extensive range of accessories
- Function module for PLC available

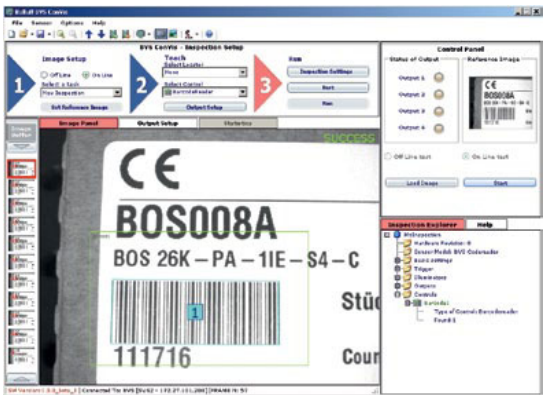

Readable barcodes
- Interleaved 2-of-5
- Code 39
- Code 128
- Pharmacode
- Codabar
- EAN 8
- EAN 13
- UPC-E
- UPC-A
- PDF 417

Readable Data Matrix codes
- ECC 200
  (suitable for high and low contrast, for directly marked and mirrored codes)

Series		
Style		
Lens, focal length		
Red light	PNP	**Ordering code**
		Part number
Infrared light	PNP	**Ordering code**
		Part number
Supply voltage U_B		
Switching inputs		
Switching outputs		
Interface		
Rated operating current I_e		
Configuration interface		
Parameter configuration		
Typ. detection rate		
Image sensor		
Working range		
Working distance, Field of view (horizontal×vertical)		
Lighting		
Eye safety per IEC 62471		
Dimensions		
Connection		
Degree of protection per IEC 60529		
Ambient temperature range T_a		

Refer to the Technical section for optical and electrical information. To define the field of view and working distance, use the distance calculator at: **www.balluff.us/vision**

Refer to the Accessories section for a wide variety of external illuminators and mounting brackets. Refer to the Connectivity section for a selection of compatible connectors.

BVS Vision Sensors

Detecting and identifying varied codes

Vision sensor	Vision sensor	Vision sensor
BVS-E **Identification**	BVS-E **Identification**	BVS-E **Identification**
Wide-angle lens, 6 mm	Standard lens, 8 mm	Telephoto lens, 12 mm
BVS001R	**BVS0001**	**BVS000T**
BVS ID-3-005-E	BVS ID-3-001-E	BVS ID-3-003-E
BVS001C	**BVS0019**	**BVS001A**
BVS ID-3-105-E	BVS ID-3-101-E	BVS ID-3-103-E
24 V DC ±10 %	24 V DC ±10 %	24 V DC ±10 %
1× Trigger	1× Trigger	1× Trigger
1× lighting synchron., 2× PNP	1× lighting synchron., 2× PNP	1× lighting synchron., 2× PNP
RS232, Ethernet TCP/IP	RS232, Ethernet TCP/IP	RS232, Ethernet TCP/IP
100 mA	100 mA	100 mA
Ethernet 10/100 Base T	Ethernet 10/100 Base T	Ethernet 10/100 Base T
ConVis for Windows	ConVis for Windows	ConVis for Windows
3...40 Hz (depending on evaluation function)	3...40 Hz (depending on evaluation function)	3...40 Hz (depending on evaluation function)
CMOS-SW-VGA 640×480	CMOS-SW-VGA 640×480	CMOS-SW-VGA 640×480
50...1000 mm	50...1000 mm	50...1000 mm
50 mm, 1000 mm, 34×25 mm 676×507 mm	50 mm, 1000 mm, 24×18 mm 480×360 mm	50 mm, 1000 mm, 16×12 mm 320×240 mm
LED, incident light, deselectable	LED, incident light, deselectable	LED, incident light, deselectable
Exempt group	Exempt group	Exempt group
58×52×40 mm	58×52×40 mm	58×52×40 mm
2× M12 connector, 8- and 4-pin	2× M12 connector, 8- and 4-pin	2× M12 connector, 8- and 4-pin
IP 54	IP 54	IP 54
–10...+55 °C	–10...+55 °C	–10...+55 °C

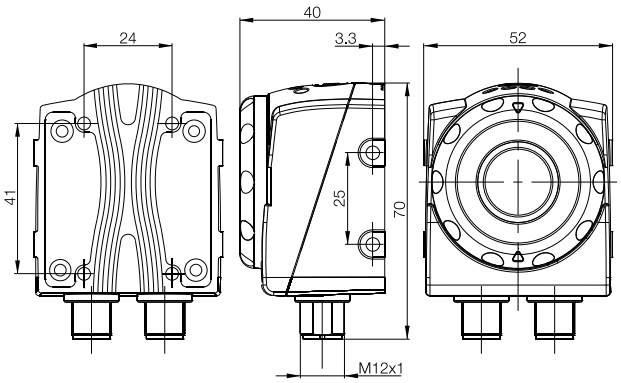

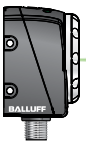

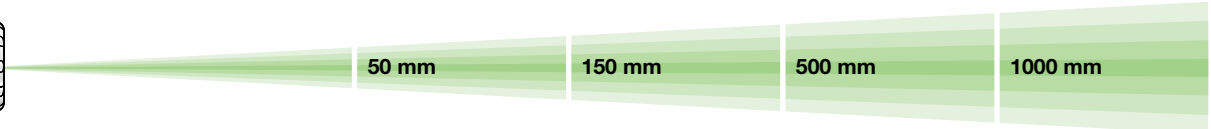

Working distance,	**6 mm** Wide-angle lens	34×25 mm	101×76 mm	338×253 mm	676×507 mm
Field of view	**8 mm** Standard lens	24×18 mm	72×54 mm	240×180 mm	480×360 mm
(horizontal×vertical)	**12 mm** Telephoto lens	16×12 mm	48×36 mm	160×120 mm	320×240 mm

* Working range 180 to 1000 mm

Inspect and monitor your production process with the BVS-E Standard. Choose the correct tool for your application from a large selection and set up your inspection. You can replace several sensors with a combination of tools. If different components are used, activate the relevant inspection via the PLC control to allow production to continue seamlessly without requiring a teach-in/setup process.

- Simple operation
- Convenient setup
- Reliable evaluation
- Extensive range of accessories
- Function module for PLC available

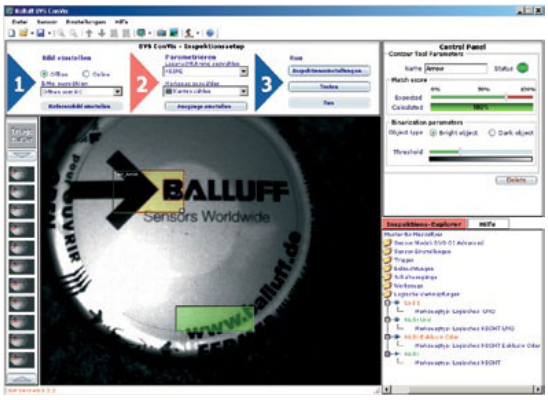

Software

- 20 inspection memory cells
- Free rotation of tools
- Zoom function
- Existing sensors updated at no extra cost
- Seven independent tools

Series			
Style			
Lens, focal length			
Red light	PNP	**Ordering code**	
		Part number	
	NPN	**Ordering code**	
		Part number	
Infrared light	PNP	**Ordering code**	
		Part number	
Supply voltage U_B			
Switching inputs			
Switching outputs			
Rated operating current I_e			
Configuration interface			
Parameter configuration			
Typ. detection rate			
Image sensor			
Working range			
Working distance, Field of view (horizontal×vertical)			
Lighting			
Eye safety per IEC 62471			
Connection			
Degree of protection per IEC 60529			
Ambient temperature range T_a			

Refer to the Technical section for optical and electrical information. To define the field of view and working distance, use the distance calculator at: **www.balluff.us/vision**

Refer to the Accessories section for a wide variety of external illuminators and mounting brackets. Refer to the Connectivity section for a selection of compatible connectors.

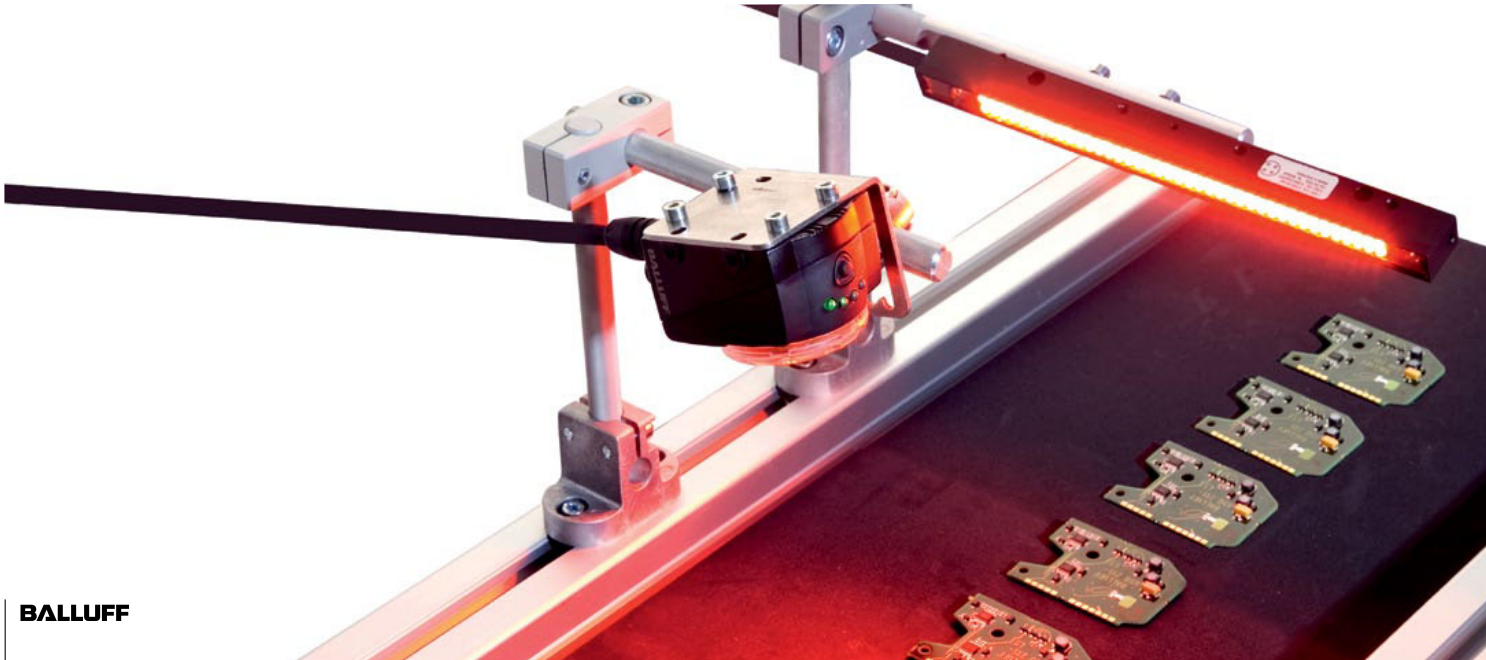

BVS Vision Sensors
For increased quality and productivity

Vision sensor	Vision sensor	Vision sensor
BVS-E **Standard**	BVS-E **Standard**	BVS-E **Standard**
Wide-angle lens, 6 mm	Standard lens, 8 mm	Telephoto lens, 12 mm
BVS000E	**BVS0003**	**BVS0005**
BVS OI-3-005-E	BVS OI-3-001-E	BVS OI-3-003-E
BVS000C	**BVS0004**	**BVS0006**
BVS OI-3-006-E	BVS OI-3-002-E	BVS OI-3-004-E
BVS0013	**BVS0014**	**BVS0012**
BVS OI-3-105-E	BVS OI-3-101-E	BVS OI-3-103-E
24 V DC ±10 %	24 V DC ±10 %	24 V DC ±10 %
1× Trigger, 1× Select	1× Trigger, 1× Select	1× Trigger, 1× Select
1× lighting synchron. or 1× PNP, 3× PNP or NPN configurable	1× lighting synchron. or 1× PNP, 3× PNP or NPN configurable	1× lighting synchron. or 1× PNP, 3× PNP or NPN configurable
100 mA	100 mA	100 mA
Ethernet 10/100 Base T	Ethernet 10/100 Base T	Ethernet 10/100 Base T
ConVis for Windows	ConVis for Windows	ConVis for Windows
3...15 Hz (depending on evaluation function)	3...15 Hz (depending on evaluation function)	3...15 Hz (depending on evaluation function)
CMOS-SW-VGA 640×480	CMOS-SW-VGA 640×480	CMOS-SW-VGA 640×480
50...1000 mm	50...1000 mm	50...1000 mm
50 mm, 1000 mm, 34×25 mm 676×507 mm	50 mm, 1000 mm, 24×18 mm 480×360 mm	50 mm, 1000 mm, 16×12 mm 320×240 mm
LED, incident light, deselectable	LED, incident light, deselectable	LED, incident light, deselectable
Exempt group	Exempt group	Exempt group
2× M12 connector, 8- and 4-pin	2× M12 connector, 8- and 4-pin	2× M12 connector, 8- and 4-pin
IP 54	IP 54	IP 54
–10...+55 °C	–10...+55 °C	–10...+55 °C

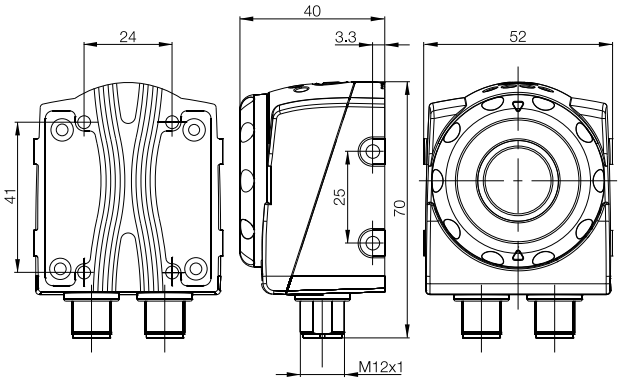

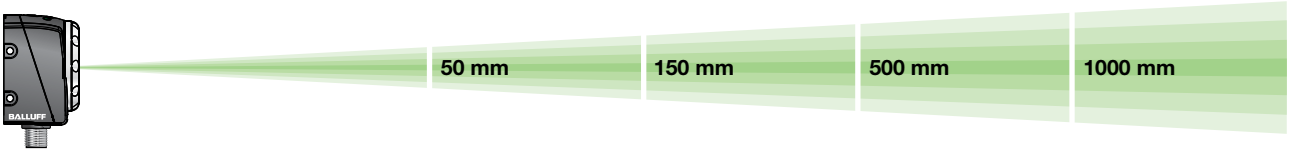

Working distance, Field of view (horizontal×vertical)	**6 mm** Wide-angle lens	34×25 mm	101×76 mm	338×253 mm	676×507 mm
	8 mm Standard lens	24×18 mm	72×54 mm	240×180 mm	480×360 mm
	12 mm Telephoto lens	16×12 mm	48×36 mm	160×120 mm	320×240 mm

* Working range 180 to 1000 mm

Universal Barcode and Measurement

In addition to the standard functions of the BVS-E, the universal vision sensor also monitors the rotational position. It can detect objects regardless of the location and position. Production can be monitored more efficiently through shorter process times and the option of using logical functions to combine individual checks.

- The most versatile functionality – lowers user stock requirements.
- Contour based analysis – precisely locate and verify your part
- Ethernet TCP/IP, RS232 interface – part position and checking results for more process information
- Fast code location and verification – reliably identify your parts at higher part rates.

The application range of the BVS Universal includes part presence checks, reading and verifying codes to demanding part positioning applications.

The new powerful 360° contour match tools allow for the locating, verifying and counting of rotated parts in your application. The detected part location can then be transmitted to a PLC or Robot using the built in communication interface.

Up to 40 linear and Data Matrix codes per second can be reliably located and verified, providing outstanding performance for this class of vision sensor.

Logical connections

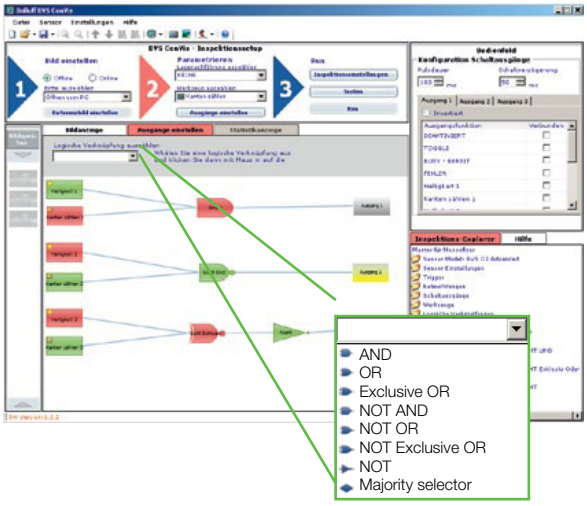

Refer to the Technical section for optical and electrical information. To define the field of view and working distance, use the distance calculator at:
www.balluff.us/vision

Refer to the Accessories section for a wide variety of external illuminators and mounting brackets. Refer to the Connectivity section for a selection of compatible connectors.

Series		
Style		
Lens, focal length		
Red light	PNP	**Ordering code**
		Part number
Infrared light	PNP	**Ordering code**
		Part number
Supply voltage U_B		
Switching inputs		
Switching outputs		
Interface		
Rated operating current I_e		
Configuration interface		
Parameter configuration		
Typ. detection rate		
Image sensor		
Working range		
Working distance,		
Field of view (horizontal×vertical)		
Lighting		
Eye safety per IEC 62471		
Connection		
Degree of protection per IEC 60529		
Ambient temperature range T_a		

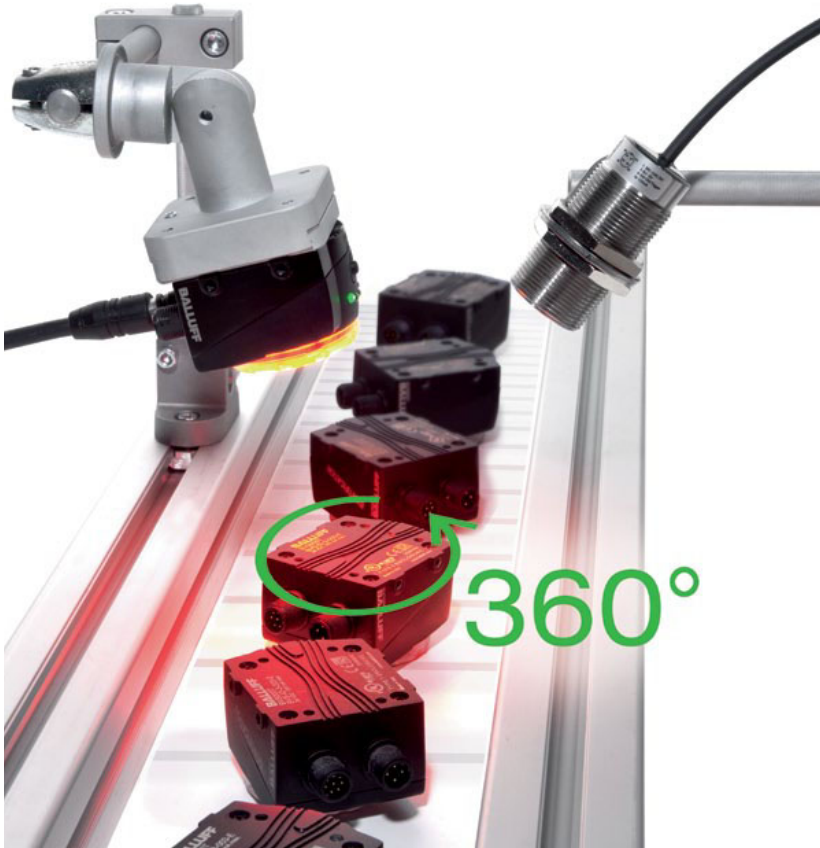

BVS Vision Sensors
The highest versatility

Vision sensor	Vision sensor	Vision sensor
BVS-E **Universal**	BVS-E **Universal**	BVS-E **Universal**
Wide-angle lens, 6 mm	Standard lens, 8 mm	Telephoto lens, 12 mm
BVS001L	**BVS001M**	**BVS001N**
BVS UR-3-005-E	BVS UR-3-001-E	BVS UR-3-003-E
BVS001F	**BVS001H**	**BVS001J**
BVS UR-3-105-E	BVS UR-3-101-E	BVS UR-3-103-E
24 V DC ±10 %	24 V DC ±10 %	24 V DC ±10 %
1× Trigger	1× Trigger	1× Trigger
1× lighting synchron. or 1× PNP, 2× PNP	1× lighting synchron. or 1× PNP, 2× PNP	1× lighting synchron. or 1× PNP, 2× PNP
RS232, Ethernet TCP/IP	RS232, Ethernet TCP/IP	RS232, Ethernet TCP/IP
100 mA	100 mA	100 mA
Ethernet 10/100 Base T	Ethernet 10/100 Base T	Ethernet 10/100 Base T
ConVis for Windows	ConVis for Windows	ConVis for Windows
3...40 Hz (depending on evaluation function)	3...40 Hz (depending on evaluation function)	3...40 Hz (depending on evaluation function)
CMOS-SW-VGA 640×480	CMOS-SW-VGA 640×480	CMOS-SW-VGA 640×480
50...1000 mm	50...1000 mm	50...1000 mm
50 mm, 1000 mm,	50 mm, 1000 mm,	50 mm, 1000 mm,
34×25 mm 676×507 mm	24×18 mm 480×360 mm	16×12 mm 320×240 mm
LED, incident light, deselectable	LED, incident light, deselectable	LED, incident light, deselectable
Exempt group	Exempt group	Exempt group
2× M12 connector, 8- and 4-pin	2× M12 connector, 8- and 4-pin	2× M12 connector, 8- and 4-pin
IP 54	IP 54	IP 54
–10...+55 °C	–10...+55 °C	–10...+55 °C

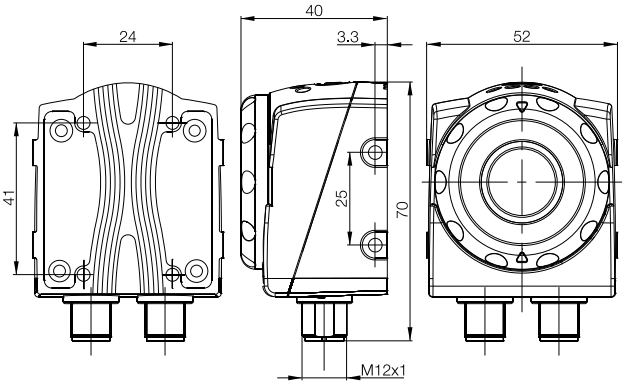

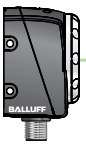

		50 mm	150 mm	500 mm	1000 mm
Working distance,	**6 mm** Wide-angle lens	34×25 mm	101×76 mm	338×253 mm	676×507 mm
Field of view	**8 mm** Standard lens	24×18 mm	72×54 mm	240×180 mm	480×360 mm
(horizontal×vertical)	**12 mm** Telephoto lens	16×12 mm	48×36 mm	160×120 mm	320×240 mm

* Working range 180 to 1000 mm

BVS Vision Sensors

See what the sensor sees

- Simple, self-explanatory operation
- Can be retrofitted on all existing sensors
- Clearly arranged presentation of process statistics and sensor results
- Access for operators, setters and administrators can be controlled by passwords
- Memory for 20 inspections
- Connection to sensor via direct link or network (TCP/IP)

Do you want to see what the sensor sees? You wish to increase your inspection quality with the use of statistical values? And to simply adapt your inspection to changes in components? We have a simple solution: the Vision Sensor Monitor.
It visualizes the sensor images and inspection results and displays the process statistics in a simple overview graphic. The detection of unwanted deviations thus becomes really simple. If an inspection feature changes, such as a sell-by date, authorized users can then adapt the inspection criteria even without a PC. Lengthy setting work is therefore no longer necessary. The monitor allows simple switching between two inspections. The easy-to-use, intuitive user interface of the monitor can be controlled by operating buttons and is available in multiple languages.

Model		Vision Sensor Monitor
Type		BVS-E
PNP	**Ordering code**	**BAE00EH**
	Part number	BAE PD-VS-002-E
Supply voltage U_B		24 V DC ±10 %
Dimensions		96×96×42.4 mm
Connection		2× M12 connector, 4-pin
Degree of protection per IEC 60529		IP 40
Ambient temperature T_a		–10...+55 mm
Display		3.5" color LCD

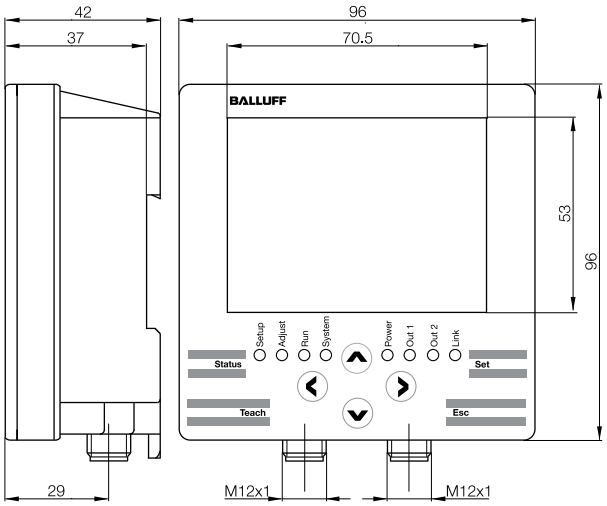

BVS Vision Sensors

Sensors and accessories – neatly packed

Ever experienced this?
You ordered the Vision Sensor BVS with connecting cable. During initial operation, however, you determine that the parameterization cables and mounting brackets are still missing.

This is why we have integrated the Vision Sensor BVS with accessories for you in a package. You only have to order one item and you have everything you need to operate the sensor.
An Added-Value Kit contains a Vision Sensor in a design of your choice, including software CD and operating instructions, mounting bracket and installation accessories, supply and parameterization cables, which means you only have to connect a 24-V power supply unit. If you do not happen to have a power supply unit, needless to say we can also supply you with one.

Description			Added-Value Kit with Vision Sensor BVS	
			Contains red light sensor	**Contains infrared light sensor**
Identification series	6-mm lens	**Ordering code**		**SET0128**
		Part number		BAV BP-PH-00076-01
	8-mm lens	**Ordering code**	**SET012J**	**SET0129**
		Part number	BAV BP-PH-00017-01	BAV BP-PH-00077-01
	12-mm lens	**Ordering code**	**SET012K**	**SET012A**
		Part number	BAV BP-PH-00018-01	BAV BP-PH-00078-01
Standard series	6-mm lens	**Ordering code**	**SET012P**	**SET0121**
		Part number	BAV BP-PH-00022-01	BAV BP-PH-00068-01
	8-mm lens	**Ordering code**	**SET012M**	**SET0122**
		Part number	BAV BP-PH-00020-01	BAV BP-PH-00069-01
	12-mm lens	**Ordering code**	**SET012N**	**SET0123**
		Part number	BAV BP-PH-00021-01	BAV BP-PH-00070-01
Universal series	6-mm lens	**Ordering code**	**SET014U**	**SET0150**
		Part number	BAV BP-PH-00092-03	BAV BP-PH-00092-07
	8-mm lens	**Ordering code**	**SET014R**	**SET014Y**
		Part number	BAV BP-PH-00092-01	BAV BP-PH-00092-05
	12-mm lens	**Ordering code**	**SET014T**	**SET014Z**
		Part number	BAV BP-PH-00092-02	BAV BP-PH-00092-06
Contents			Vision sensor, mounting bracket, installation accessories, connector, software CD and operating instructions	

Industrial Connectivity

Industrial Connectivity

With every application of a system there are unique cabling and connector requirements. Balluff has a broad offering that will aid in connecting your devices to whatever you are trying to integrate.

Contents

BIS U cables	274
BIS VM/VL read/write head and interface cables	276
Combined serial, IO, and power cables	282
BIS M/L read/write head cables	284
BIS C read/write head cables	286
ProfiBus	290
EtherNet connectors	292
DeviceNet	294
CC-Link	298
IO-Link	300
IO-Link masters	302
Subnet16	304
M12 & 7/8" power cords	306
7/8" power cordsets	307
BVS power and interface cables	310
BVS monitor and lighting cables	311
Unmanaged IP 67 switches	312
Unmanaged IP 20 switches	313

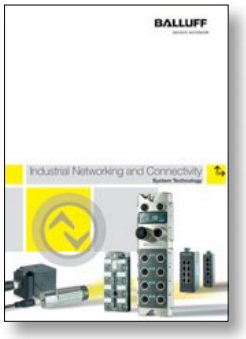

You will find many additional products in our total product line, "Industrial networking and connectivity – Intelligent and comprehensive networking for system technology" or online at: **www.balluff.com**.

Technical information and definitions can be found on **page 354**

Version	
Use	
Ordering code	
Part number	
Ordering code	
Part number	
Ordering code	
Part number	
Ordering code	
Part number	
Connector	
Cable diameter	
Conductor cross section	
Degree of protection per IEC 60529	
Ambient temperature	
Cable	
Surge impedance	

Last two numbers of part number indicate length in meters.

BIS U cables

	Connection cable	Adapter cable
	for connecting to processors and antenna	for connecting to processors BIS U-6020-053-104-00-ST26 BIS U-6027-054-104-06-ST27
	BAM01HL	**BCC00PL**
	BIS U-500-EF-01	BIS-C-522-PVC-02
	BAM01HM	
	BIS U-500-EF-02	
	BAM01HN	
	BIS U-500-EF-05	
	BAM01HP	
	BIS U-500-EF-10	
	TNC connector 7/16"	Serial interface RS232 to PC
	5 mm	5.8 mm
	0.94 mm	
	IP 68	IP 67
	–40...85°C	–5...+80 °C
	FRPE	PVC
	50 Ω	

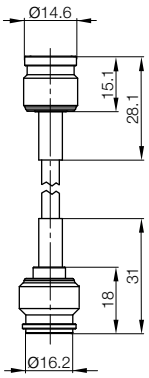

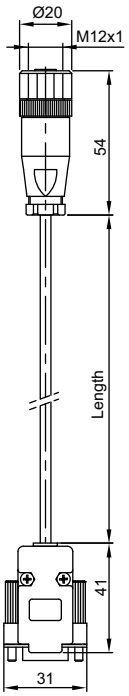

BIS VM/VL read/write head unshielded cables

Version	4-pin, female-male unshielded	4-pin, female-male unshielded	
Use	for read/write head and processor ≤ 3m length	for read/write head and processor ≤ 3m length	
Ordering code	**Determined by cable length**	**Determined by cable length**	
Part number	BCC-M415-M414-3A-304-PX0434-_ _ _	BCC-M415-M424-3A-304-PX0434-_ _ _	
Connector	M12 + M12	M12 + M12	
Protection per IEC 60529	IP 68 when attached	IP 68 when attached	
Ambient temperature range	–25...+80 °C	–25...+80 °C	
Cable	PUR	PUR	

Last two numbers of part number indicate length in meters.

Standard lengths available:
003 = 0.3 m
006 = 0.6 m
010 = 1.0 m
015 = 1.5 m
020 = 2.0 m

Note:
When connecting the BIS VM read/write head to the BIS U processor, an unshielded cable can be used for lengths less than 3 meters. For lengths equal to or greater than 3 meters a shielded cable is required.

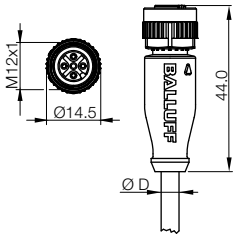

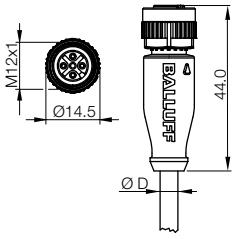

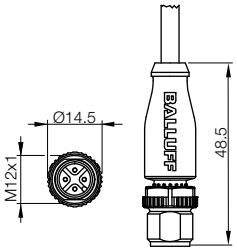

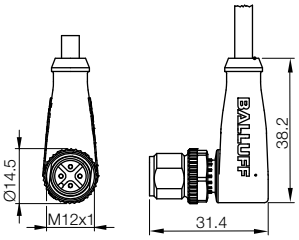

BIS VM/VL read/write head unshielded cables

	4-pin, female-male unshielded for read/write head and processor ≤ 3m length	4-pin, female-male unshielded for read/write head and processor ≤ 3m length
	Determined by cable length	**Determined by cable length**
	BCC M425-M414-3A-304-PX0434-_ _ _	BCC M425-M424-3A-304-PX0434-_ _ _
	M12 + M12	M12 + M12
	IP 68 when attached	IP 68 when attached
	–25...+80 °C	–25...+80 °C
	PUR	PUR

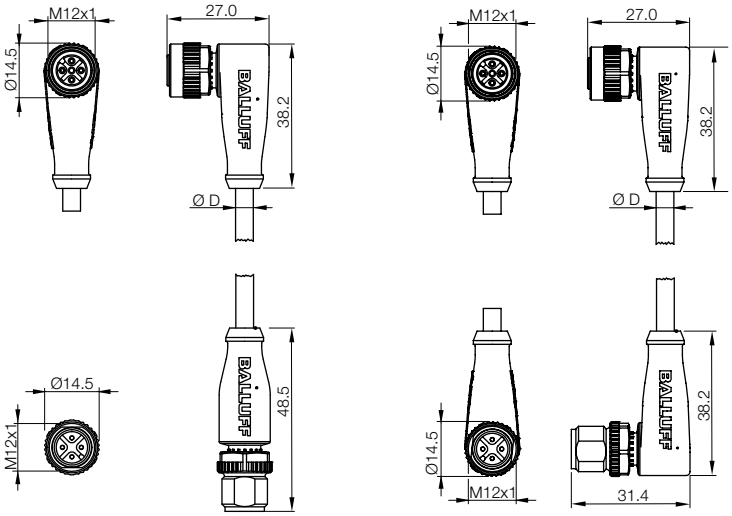

BIS VM/VL read/write head shielded cables

Version	4-pin, female-male shielded	4-pin, female-male shielded	
Use	for read/write head and processor ≤ 3m length	for read/write head and processor ≤ 3m length	
Ordering code	**Determined by cable length**	**Determined by cable length**	
Part number	BCC-M415-M414-3A-305-PS0434-_ _ _	BCC-M415-M424-3A-305-PS0434-_ _ _	
Connector	M12 + M12	M12 + M12	
Protection per IEC 60529	IP 67 when attached	IP 67 when attached	
Ambient temperature range	–25...+80 °C	–25...+80 °C	
Cable	PUR	PUR	

Last two numbers of part number indicate length in meters.

Standard lengths available:
030 = 3.0 m
050 = 5.0 m
100 = 10.0 m
200 = 20.0 m

Note:
When connecting the BIS VM read/write head to the BIS U processor, an unshielded cable can be used for lengths less than 3 meters. For lengths equal to or greater than 3 meters a shielded cable is required.

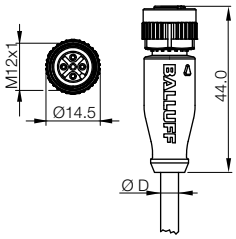

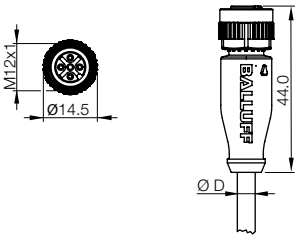

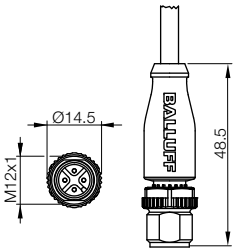

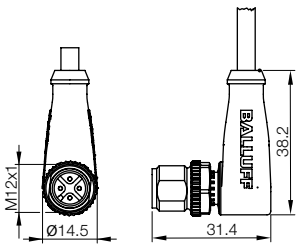

BIS VM/VL read/write head shielded cables

	4-pin, female-male shielded for read/write head and processor ≤ 3m length	4-pin, female-male shielded for read/write head and processor ≤ 3m length
	Determined by cable length	**Determined by cable length**
	BCC-M425-M414-3A-305-PS0434-_ _ _	BCC-M425-M424-3A-305-PS0434-_ _ _
	M12 + M12	M12 + M12
	IP 67 when attached	IP 67 when attached
	–25...+80 °C	–25...+80 °C
	PUR	PUR

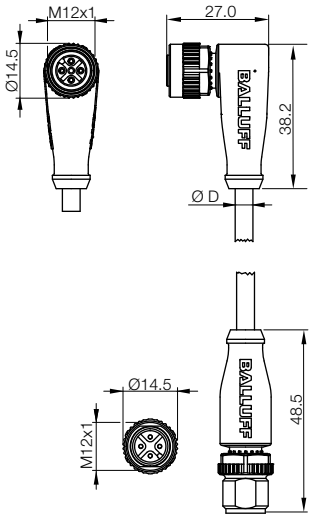

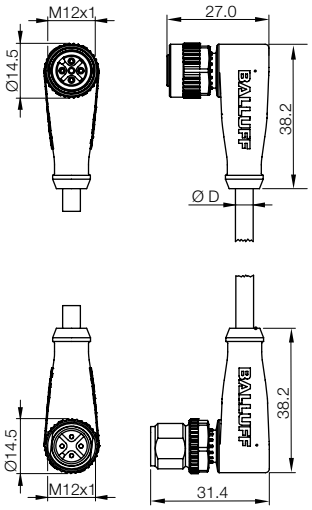

BIS VM/VL read/write head cables

Version	4-pin, female shielded
Use	for read/write head to processor ≥ 2m length
Ordering code	**Determined by cable length**
Part number	BCC M415-0000-1A-014-PS0434-_ _ _
Connector	M12 to flying leads
Protection per IEC 60529	IP 67 when attached
Ambient temperature range	–25...+85 °C
Cable	PUR shielded

Last two numbers of part number indicate length in meters.

Standard lengths available:
020 = 2.0 m
050 = 5.0 m
100 = 10.0 m
200 = 20.0 m

Note:
When connecting the BIS VM read/write head to the BIS U processor, an unshielded cable can be used for lengths less than 3 meters. For lengths equal to or greater than 3 meters a shielded cable is required.

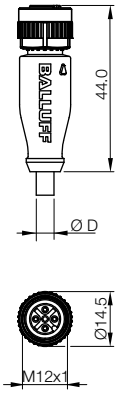

BIS VM/VL read/write head cables and USB BIS V service interface connector

	4-pin, female shielded	4-pin, male connector	M12 male/USB-A
	for read/write head to processor ≥ 2m length	for read/write head cable to processor	for BIS V service interface
	Determined by cable length	**BCC0869**	**BCC0CR2**
	BCC M425-0000-1A-014-PS0434-_ _ _	BCC M474-0000-2A-000-01X475-000	BCC M415-U024-8F-696-VX04T8-018
	M12 to flying leads	M12 field attachable connector	
	IP 67 when attached	IP 67 when attached	IP 68/IP 20
	–25...+85 °C	–25...+85 °C	-5...+105 °C/-40...+105 °C
	PUR shielded		PVC shielded

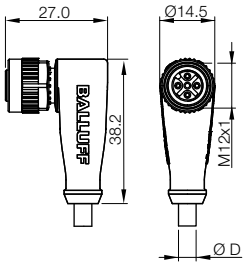

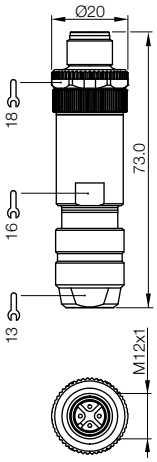

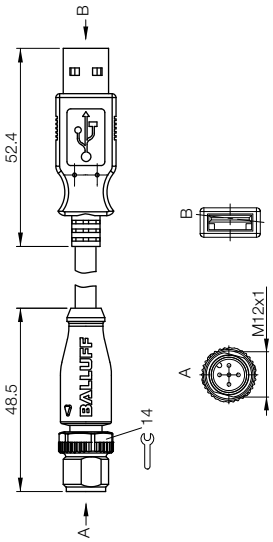

Combined serial, IO cables, and power cables

Version	8-pin, female	
Use	for connecting to processors RS232 service interface	
Ordering code	**BCC04MC**	
Part number	BCC M478-0000-1A-000-43X834-000	
Ordering code		
Part number		
Ordering code		
Part number		
Connector	M12	
Protection* per IEC 60529	IP 67	
Ambient temperature range	–40...+85 °C	
Cable	diameter 6...8 mm	

Last two numbers of part number indicate length in meters.

*only when connected
**at temperatures below freezing

Cable can be trailed and may also be shortened to the required length. For fixed routing the minimum bending radius is 16 mm at an ambient temperature of –40...+85 °C.
Least bending radius for flexed routing 80 mm at ambient temperature –25...+85 °C.

Use matched accessories on your BIS for optimum integration!
Drag chain compatible cable for heightened requirements

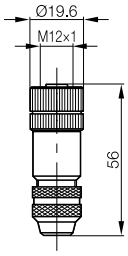

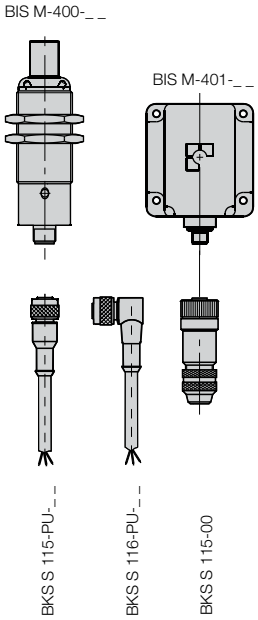

Combined serial, IO cables, and power cables

	8-pin, straight female	8-pin, right-angle,	8-pin, female, Straight, Right Angle
	BIS M-4_ _	BIS M-4_ _	for connecting to processors
	with RS232 port	with RS232 port	RS232 service interface
	Determined by cable length	**Determined by cable length**	
	BKS-S115-PU-_ _	BKS-S116-PU-_ _	
			BCC0A03
			BCC M438-0000-1A-000-51X850-000
			BCC04ME
			BCC M488-0000-1A-000-43X834-000
	M12	M12	M12
	IP 67	IP 67	IP 67
	–25...+90 °C**	–25...+90 °C**	–25...+85 °C
	molded PUR	molded PUR	

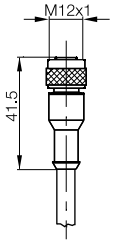

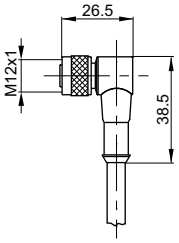

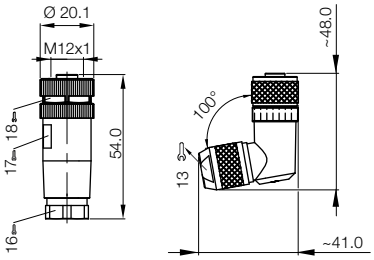

Please append cable length to ordering code!

02	=	Length	2	m
05	=	Length	5	m
10	=	Length	10	m
15	=	Length	15	m

BIS M/L read/write head cables

Version	8-pin, female - male	8-pin, female - male
Use	for read/write head and processor	for read/write head and processor
Ordering code	**Determined by cable length**	**Determined by cable length**
Part number	BIS Z-501-PU1-_ _/E	BIS Z-502-PU1-_ _/E
Connector	M12	M12
Protection* per IEC 60529	IP 67 when attached	IP 67 when attached
Ambient temperature range	–40...+85 °C	–40...+85 °C
Accessories included	BKS-S117-00	BKS-S117-00
Cable	PUR	PUR

Last two numbers of part number indicate length in meters.

*only when connected

Cable can be trailed and may also be shortened to the required length. For fixed routing the minimum bending radius is 16 mm at an ambient temperature of –40...+85 °C. Least bending radius for flexed routing 80 mm at ambient temperature –25...+85 °C.

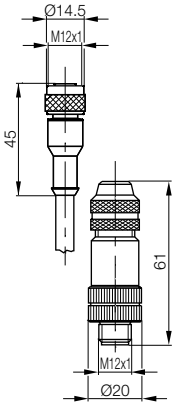

Connector included

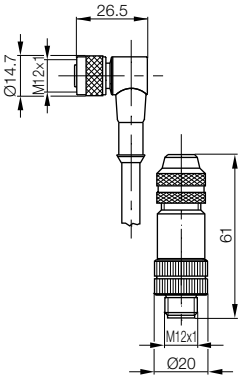

Connector included

Please append cable length to ordering code!

05 = Length 5 m
10 = Length 10 m
20 = Length 20 m
25 = Length 25 m
50 = Length 50 m

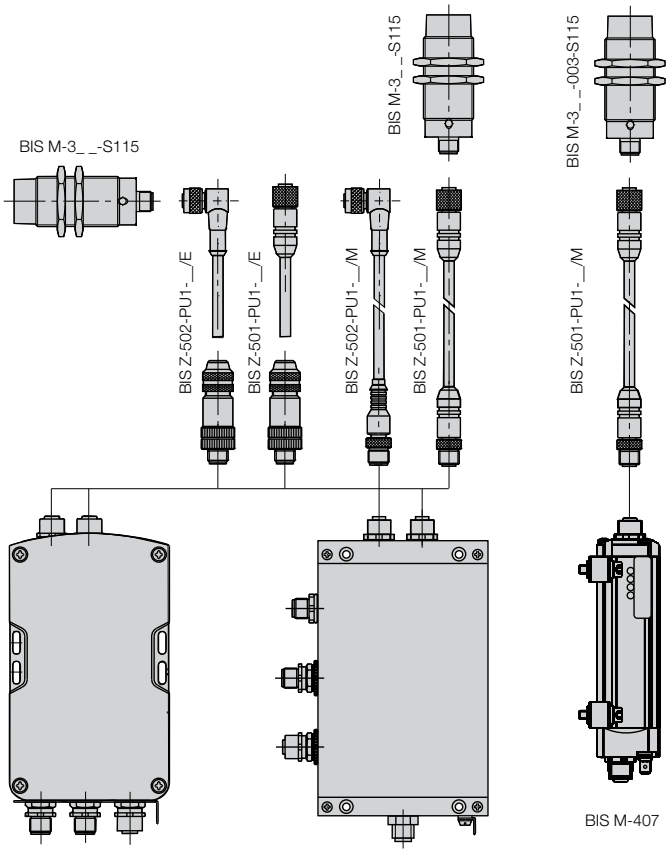

BIS M/L read/write head cables

	8-pin, female, male for read/write head and processor	8-pin, female, male for read/write head and processor	8-pin, male for connecting read/write head to processor
	Determined by cable length	**Determined by cable length**	**BCC00TL**
	BIS Z-501-PU1-_ _/M	BIS Z-502-PU1-_ _/M	BKS-S117-00
	M12	M12	M12
	IP 67	IP 67	IP 67
	–40...+85 °C	–40...+85 °C	–40...+85 °C
	PUR	PUR	

Use matched accessories on your BIS for optimum integration!
Drag chain compatible cable for heightened requirements

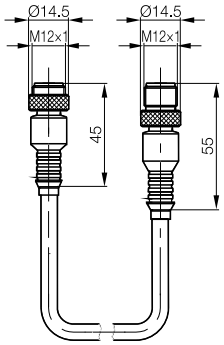

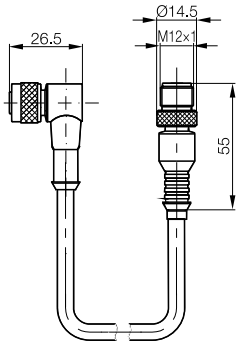

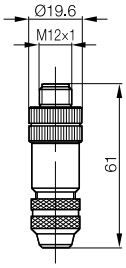

Please append cable length to ordering code!
00.5 = Length 0.5 m
01 = Length 1 m
02 = Length 2 m
05 = Length 5 m

BIS C read/write head cables

Version	2 connectors M12	2 connectors M12	2 connectors M12	2 connectors M12
Use	Read/write head with M12 connector	Read/write head with M12 connector	Read/write head with M12 connector also drag chain compatible	Read/write head with M12 connector also drag chain compatible
Ordering code	**Determined by cable length**	**Determined by cable length**	**Determined by cable length**	**Determined by cable length**
Part number	BIS C-517-PVC-_ _ **	BIS C-518-PVC-_ _ **	BIS C-505-PU-_ _ **	BIS C-506-PU-_ _ **
Ordering code				
Part number			BIS C-505-PU1-_ _ **	BIS C-506-PU1-_ _ **
Connector	M12	M12	M12	M12
Protection* per IEC 60529	IP 67 when attached	IP 67 when attached	IP 67 when attached	IP 67 when attached
Ambient Temperature range	-25...+105 °C	-25...+105 °C	-40...+70 °C	-40...+70 °C
Cable	PVC	PVC	PUR	PUR

Last two numbers of part number indicate length in meters.

* only when connected

** Please append cable length to ordering code!
The length varies with the read/write head used (with S4 connector):
01 = Length 1 m,
05 = Length 5 m,
10 = Length 10 m.

Use adapted accessories for optimal integration and more demanding requirements, because cable also drag chain compatible

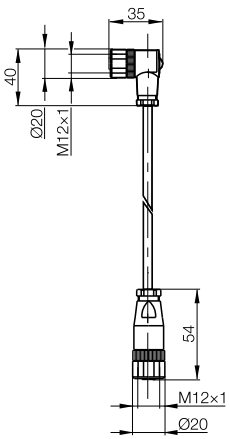

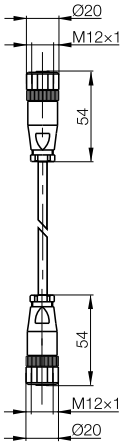

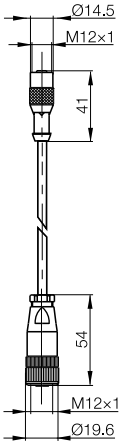

BIS C-505-PU1-_ _ is drag chain compatible

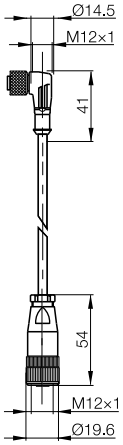

BIS C-506-PU1-_ _ is drag chain compatible

Example:

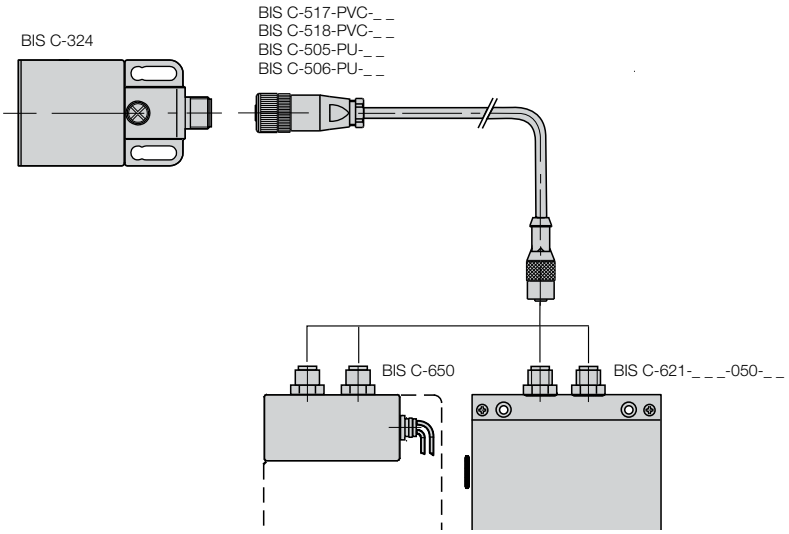

BIS C read/write head cables

2 connectors M12	Connectors M8 and M12	MIN D with fixed cable length 2 m	Adapter Cable	Adapter Cable
Read/write head	Read/write head	RS232 connection to PC	Connector M12 and MIN D,	RS 232, PS 2 connection
BIS C-355 & adapter BIS C-654	BIS C-328-_ _-S49		9-pin Service interface	to PC and BIS C-820
BCC00PJ		**BCC00PK**	**BCC00PL**	**BCC00PR**
BIS C-520-PVC-05		BIS C-521-PVC-02	BIS C-522-PVC-02	BIS C-524-PVC-01,5
	BCC00PP			
	BIS C-523-PU1-05			
M12	M8-M12	Serial RJ232	Serial interface RS232 to PC	Serial interface RS232 to M12
IP 65 when attached	IP 65 when attached			
-30...+80 °C	-40...+70 °C	-5...+80 °C	-5...+80 °C	-5...+80 °C
PVC	PUR	PVC - 9-pin DSub, other end pigtail	PVC	PVC

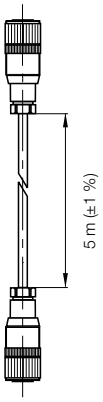

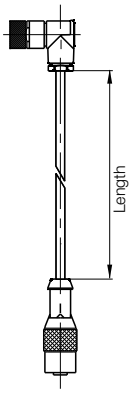

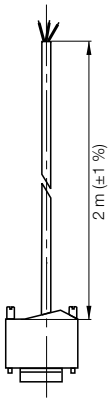

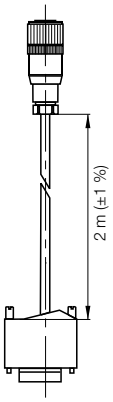

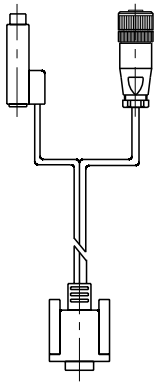

Please append cable length to ordering code!

02 = Length 2 m
03 = Length 3 m

BIS U
BIS VM/VL
USB BIS V
Serial/IO/ Power
BIS M/L
BIS C
ProfiBus
EtherNet
DeviceNet
CC-Link
IO-Link
Subnet16
Power cordsets
BVS
Unmanaged switches

BIS C read/write head cables

Balluff connectors will meet all your project requirements.
Benefit from a host of ingenious details.

Example:

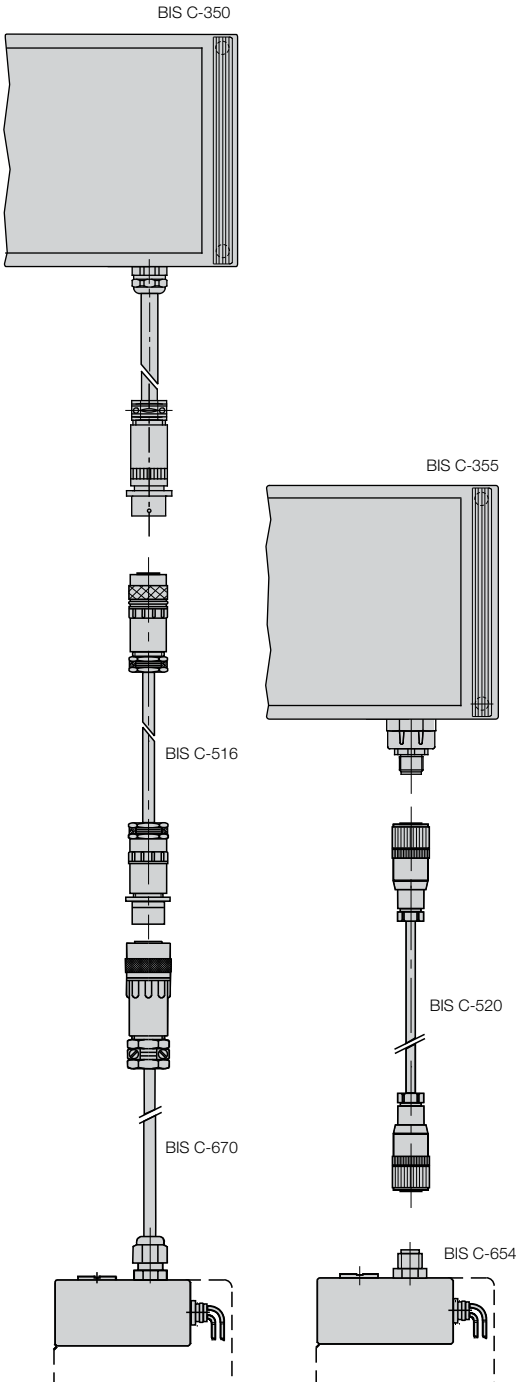

Version	
Use	
Ordering code	
Part number	
Connector type	
Recommended cable	
Protection* per IEC 60529	
Ambient Temperature range	

Last two numbers of part number indicate length in meters.

*only when connected

BIS C read/write head cables

8-pin, female	6-pin, male	BKS S 45-00, BKS S 46-00	25-pin, female
for connecting to	for extention with	for read/write head BIS C-350 to	for processors
read/write head BIS C-35_	BKS-S 45-00	adapter BIS C-670	BIS C-605-...
BCC011M	**BCC011N**	**No order code**	**BCC00T6**
BKS-S 45-00	BKS-S 46-00	BIS C-516-PU-_ _	BKS-S 52-00
Round-connector	Round-connector	Round-connector	MIN D-plug
LiYCY-0	LiYCY-0		LiYCY-0
IP 65	IP 65	IP 65 when attached	IP 40
-55...+125 °C	-55...+125 °C	-30...+80 °C	-40...+85 °C

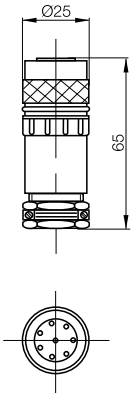

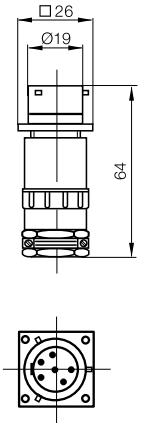

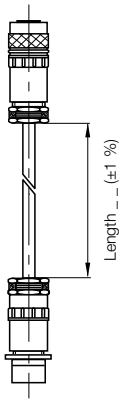

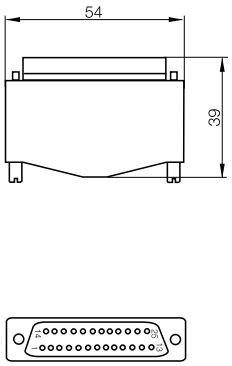

Please append cable length to ordering code!

05	=	Length	5	m,
10	=	Length	10	m,
15	=	Length	15	m,
20	=	Length	20	m,
30	=	Length	30	m,
40	=	Length	40	m,
50	=	Length	50	m,
75	=	Length	75	m,
100	=	Length	100	m.

Version	M12 straight male	M12 straight female	M12 right angle male	M12 right angle female
Use	with COM port	with COM port	with COM port	with COM port
Ordering code	**BCC0714**	**BCC0715**	**BCC0716**	**BCC0717**
Part number	BCC M475-0000-2B-000-01X575-000	BCC M475-0000-1B-000-01X575-000	BCC M485-0000-2B-000-01X575-000	BCC M485-0000-1B-000-01X575-000
Connector	M12	M12	M12	M12
Recommended cable	PUR shielded	PUR shielded	PUR shielded	PUR shielded
Protection* per IEC 60529	IP 67	IP 67	IP 67	IP 67
Ambient temperature range	–20...+85 °C	–20...+85 °C	–20...+85 °C	–20...+85 °C
Cable				

Last two numbers of part number indicate length in meters.

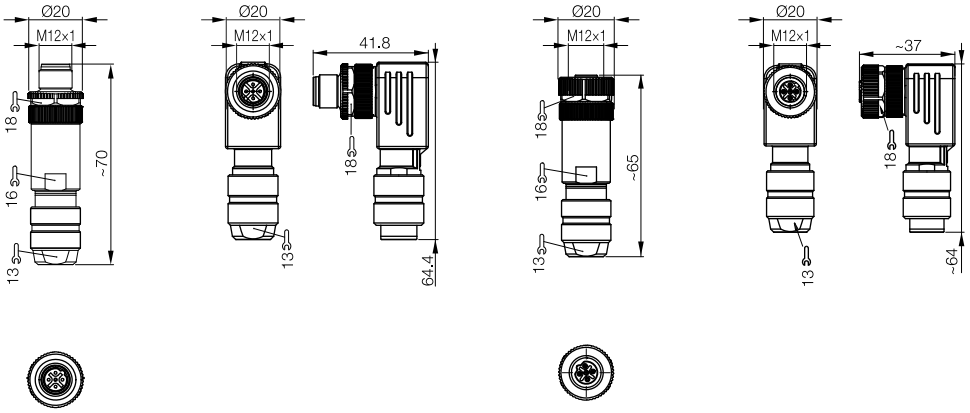

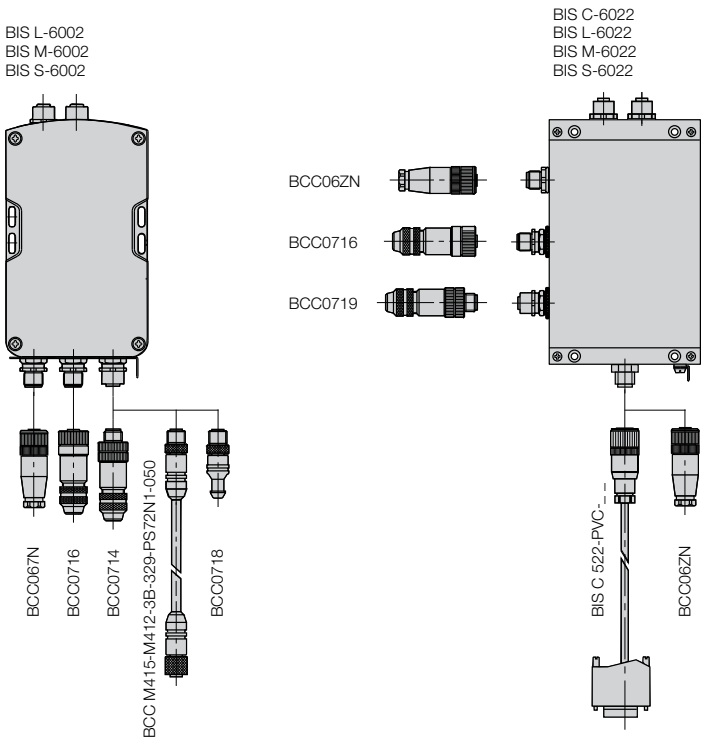

Profibus cordset and accessories

M12 straight female	M12 male terminating resistor	M12 male terminating resistor with LED	Profibus bulk cable, 100 m	Protective cover for unused connectors
with COM port	with COM port	with COM port	with COM port	
Determined by cable length	**BCC0718**	**BCC0719**	**BCC0ACA**	**BAM012P**
BCC M415-M412-3B-329-PS72N1-___	BCC M415-0000-2B-R01	BCC M415-0000-2B-R02	BCC 0000-0000-00-000-PS72N1-10X	BKS-23-CS-00
M12	M12	M12	M12	M23
PUR shielded	PUR shielded	PUR shielded	PUR shielded	
IP 67	IP 67	IP 67	IP 67	IP 65
–20...+50 °C	–20...+80 °C	–20...+80 °C	–20...+60 °C	
PUR shielded			PUR shielded	

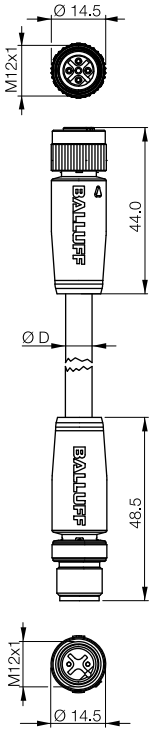

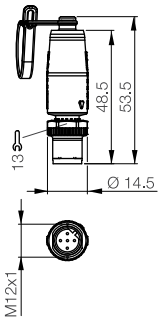

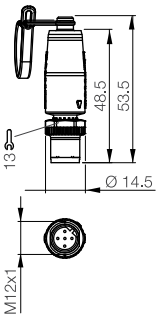

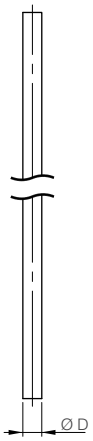

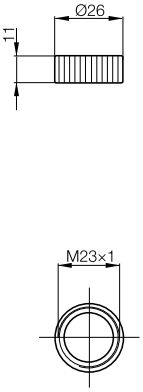

Standard lengths available:
003 = 0.3 m
006 = 0.6 m
010 = 1.0 m
020 = 2.0 m
050 = 5.0 m

BIS U
BIS VM/VL
USB BIS V
Serial/IO/ Power
BIS M/L
BIS C
ProfiBus
EtherNet
DeviceNet
CC-Link
IO-Link
Subnet16
Power cordsets
BVS
Unmanaged switches

Threaded cover
BKS 12-CS-01
coded for M12 B connector type

Version	RJ45 plug	M12, male
Use	for connecting 2 RJ45 plugs together	for connection to processors for EtherNet
Ordering code	**BCC0F2R**	**BCC03WZ**
Part number	BCC E818-E818-N0-RA095-000	BCC M474-0000-2D-000-51X475-000
Connector	RJ45, RJ45	M12 D-coded
Protection* per IEC 60529	IP20	IP 67
Ambient temperature range	–10...+60 °C	–40...+85 °C

Last two numbers of part number indicate length in meters.

*only when connected

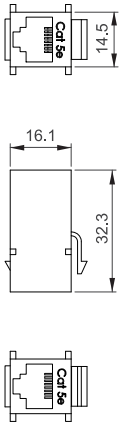

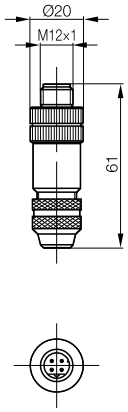

M12, female	Adapter cable M12 straight male/RJ45 straight male	Adapter cable M12 straight male/M12 straight male
BCC03Y1		
BCC M474-0000-1D-000-51X475-000	BCC M414-E894-8G-672-ES64N9-_ _ _	BCC M414-M414-6D-338-ES64N9-_ _ _
M12 D-coded	M12 D-coded, RJ45	M12 D-coded, M12 D-coded
IP 67	IP 67 - IP 20	IP 67 - IP 20
–25...+85 °C	–20...+60 °C	–20...+60 °C

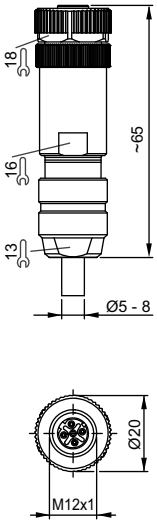

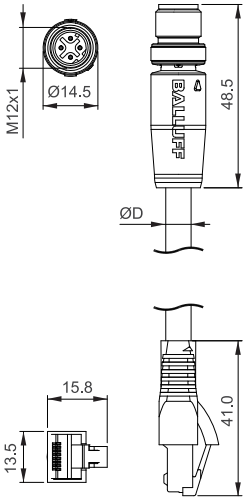

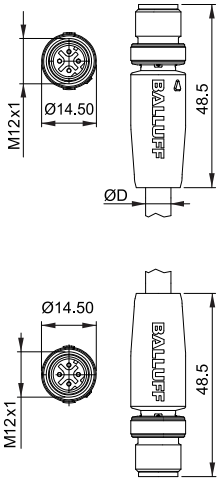

Standard lengths available:
006 = 0.6 m
020 = 2.0 m
050 = 5.0 m
100 = 10.0 m
150 = 15.0 m
200 = 20.0 m
300 = 30.0 m

DeviceNet 7/8" field attachables

DeviceNet™

The right cable for any DeviceNet connection

Version	5-pin, male	5-pin, female	5-pin, male
Use	for connection to processors BIS L-6023 DeviceNet	for connection to processors BIS L-6023 DeviceNet	termination resistor for processors BIS L-6023 DeviceNet
Ordering code	**BCC07AA**	**BCC07A9**	**BCC07Y9**
Part number	BDN C-F01-CN-NAN-01	BDN C-F01-AN-NAN-01	BDN R-CEA-01
Connector	7/8"	7/8“	7/8"
Protection* per IEC 60529	IP 67	IP 67	IP 67
Ambient temperature range	–25...+85 °C	–25...+85 °C	–40...+85 °C

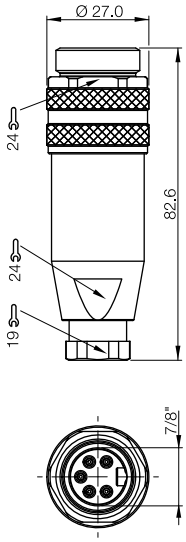

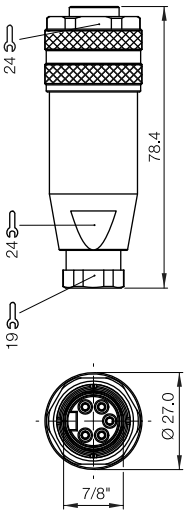

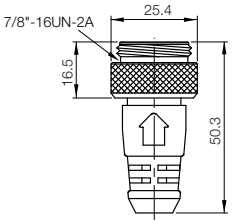

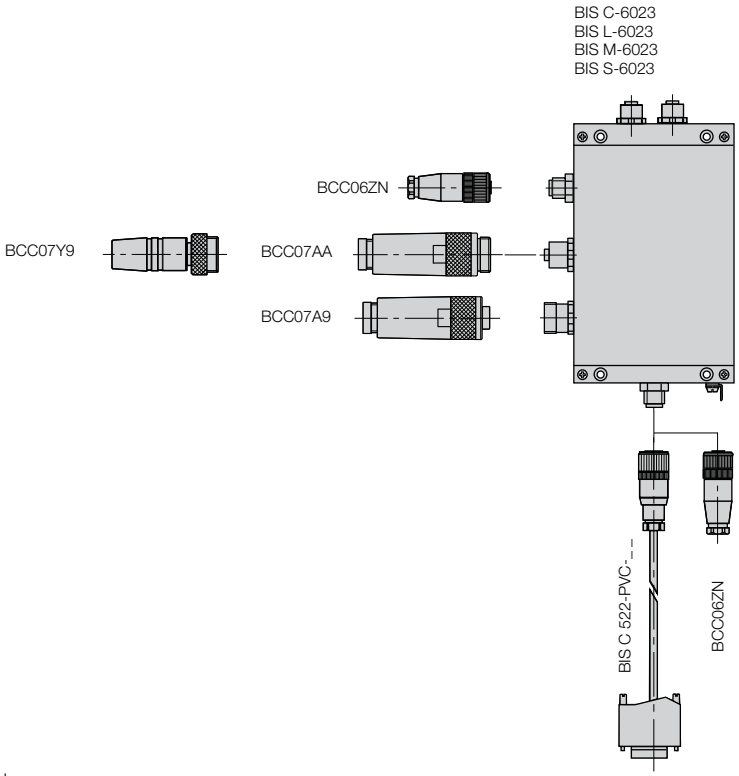

	5-pin, male - 2 5-pin female 7/8" trunk and drop tee	I/O block cap 7/8” Female Port
	BCC07WP	**BAM012T**
	BDN T-DTE-AA-01	BKS-7/8-CS-00-A
	7/8"	7/8"
	IP 67	IP 67
	-25...+85 °C	

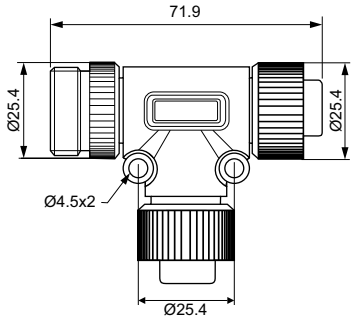

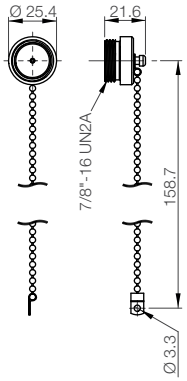

The right cable for any DeviceNet connection!

Version	Field attachable M12 straight male	Field attachable M12 straight female	Standard tee M12 pass-thru, M12 drop
Ordering code	**BCC07AE**	**BCC07AC**	**BCC07WR**
Part number	BDN C-F11-CN-NDN-01	BDN C-F11-AN-NDN-01	BDN T-DTN-DD-01
Connector	M12	M12	M12
Protection* per IEC 60529	IP 68	IP 68	IP 65
Ambient temperature range	–25...+90 °C	–25...+90 °C	–36...+60 °C
Cable			

Last two numbers of part number indicate length in meters.

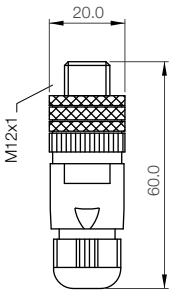

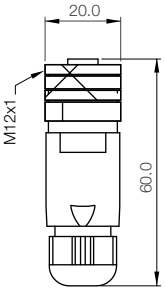

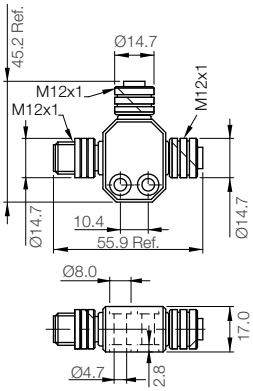

BIS C-6003
BIS L-6003
BIS M-6003
BIS S-6003

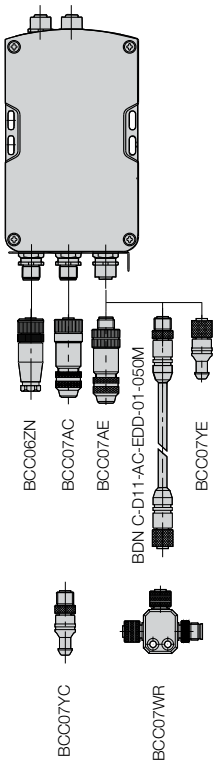

DeviceNet cables and accessories

Terminating resistor M12 female	Terminating resister M12 male	M12 thin DeviceNet media, M12 female straight, M12 male straight	M12 thin DeviceNet media, M12 female right angle, M12 male straight	M12 thin DeviceNet media, M12 female straight, M12 male right angle
BCC07YE	**BCC07YC**	**Determined by cable length**	**Determined by cable length**	**Determined by cable length**
BDN R-CED-01	BDN R-AED-01	BDN C-_ _ _-AC-EDD-01-_ _ _M	BDN C-_ _ _-BC-EDD-01-_ _ _M	BDN C-_ _ _-AD-EDD-01-_ _ _M
M12	M12	M12	M12	M12
IP 68	IP 68	IP 68	IP 68	IP 68
–20...+105 °C	–20...+105 °C	–20...+105°C	–20...+105°C	–20...+105°C
		PVC	PVC	PVC

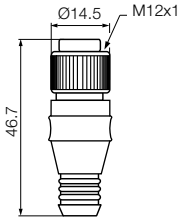

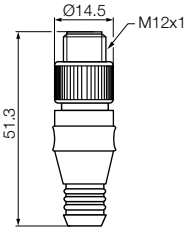

*Consult factory for availability

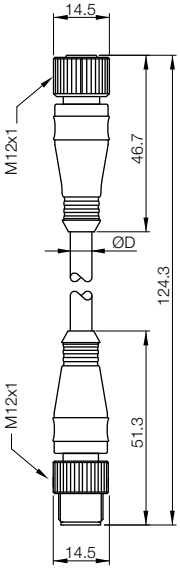

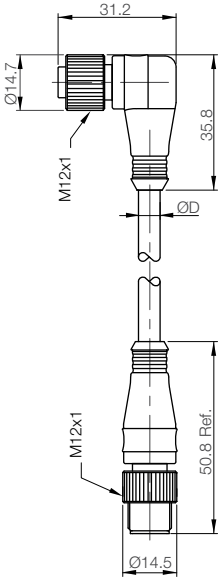

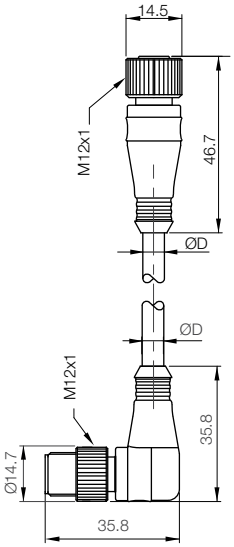

Cable types:
D11 = standard thin
D12 = flex-rated thin

Standard lengths available:
005 = 0.5 m
010 = 1.0 m
030 = 3.0 m
060 = 6.0 m

Version	Single-ended straight female M12 A-coded	
Part number	BCC M415-0000-1A-068-VS24N7-_ _ _	
Connector	M12-bare leads	
Protection per IEC 60629	IP67 (molded connector)	
Ambient temperature range	-25...+70 °C	

Last two numbers of part number indicate length in meters.

Single-Ended Standard Lengths:
020 = 2.0 m
050 = 5.0 m
100 = 10.0 m

Version	Bulkhead passthru M12 A-coded female to male	Field attachable male M12 A-coded straight	Field attachable female M12 A-coded straight	
Order code	**BCC07J5**	**BCC06F7**	**BCC06F6**	
Part number	BDN C-R00-FE-NDD-01	BCC M434-0000-2A-000-51X475-000	BCC M435-0000-1A-000-51X475-000	
Connector	M12 male bulkhead	M12 male straight	M12 female straight	
Protection per IEC 60629	IP 54	IP 67	IP 67	
Ambient temperature range	-25...+70 °C	-25...+85 °C	-25...+85 °C	

	Single-ended straight male M12 A-coded	Straight male / Straight female M12 A-coded
	BCC M414-0000-2A-068-VS24N7-_ _ _	BCC M415-M414-3A-337-VS24N7-_ _ _
	M12-bare leads	M12 female straight, M12 make straight
	IP67 (molded connector)	IP67
	-25...+70 °C	-25...+70 °C

Double-Ended Standard Lengths:
006 = 0.6 m
020 = 2.0 m
050 = 5.0 m
100 = 10.0 m
150 = 15.0 m

Double-Ended Standard Lengths:
006 = 0.6 m
020 = 2.0 m
050 = 5.0 m
100 = 10.0 m
150 = 15.0 m

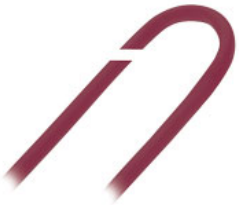

	Terminating resistor M12 A-coded male	U-Style drop M12 A-coded	T-Style drop M12 A-coded	Bulk cable 100 m
	BCC06Y4	**BCC08CA**	**BCC07WR**	**BCC0ACE**
	BCC M415-0000-2A-R03	BCC M415-M415-M415-U0007-000	BDN T-DTN-DD-01	
	M12 male	M12 male, 2 M12 female	M12 male, 2 M12 female	bulk cable
	IP 67	IP 67	IP 67	
	-20...+80 °C	-20...+80 °C	-36...+60 °C	-25...+70 °C

Version	Double-ended M12 female straight, M12 male straight	Double-ended M12 female right angle, M12 male straight
Ordering code	**Determined by cable length**	**Determined by cable length**
Part number	BCC M415-M414-3A-304-_X44T2-_ _ _	BCC M425-M414-3A-304-_X44T2-_ _ _
Connector	M12	M12
Protection per IEC 60529	IP 67	IP 67
Ambient temperature range	-25...+80 °C	-25...+80 °C
Cable	PUR	PUR

Last two numbers of part number indicate length in meters.

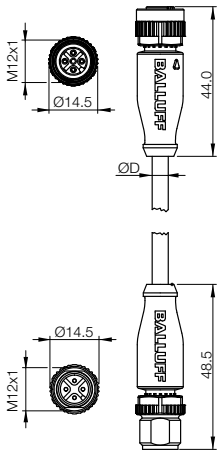

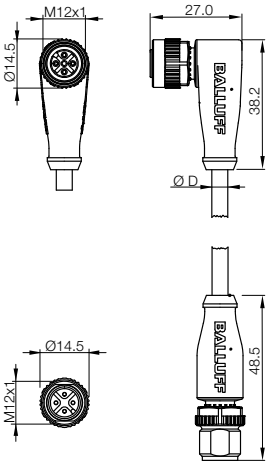

Shielded Cable Options

Size	M12 - M12	
Configuration	Female - Male	
Cable	Shielded PUR Black	
Available Lengths	1 m, 2 m, 2.5 m, 5 m	
Double-Ended Straight-Straight	BCC M415-M414-3A-305-PS0434-_ _ _*	
Single-Ended Straight Female		
Single-Ended Right Angle Female		
Field Attachable Straight Male		

IO-Link cables

	Double-ended M12 female straight, M12 male right angle	Double-ended M12 female right angle, M12 male right angle
	Determined by cable length	**Determined by cable length**
	BCC M415-M424-3A-304-_X44T2-_ _ _	BCC M425-M424-3A-304-_X44T2-_ _ _
	M12	M12
	IP 67	IP 67
	-25...+80 °C	-25...+80 °C
	PUR	PUR

Standard cable jackets:
V = PVC
P = PUR
E = TPE

Standard lengths available:
003 = 0.3 m
006 = 0.6 m
010 = 1.0 m
015 = 1.5 m
020 = 2 m
030 = 3 m
050 = 5 m

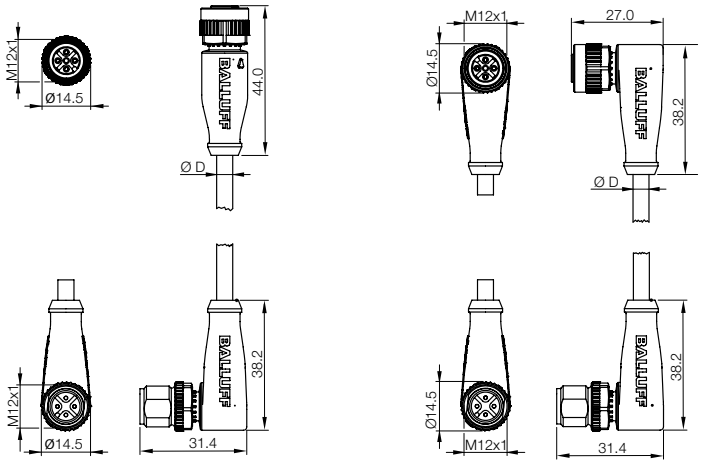

	M12
	Female with Male Field Attachable
	Shielded PUR Black
	2 m, 5 m, 10 m, 20 m
	BCC M415-0000-1A-014-PS0434-_ _ _
	BCC M425-0000-1A-014-PS0434-_ _ _
	BCC M474-0000-2A-000-01X475-000

M12 connectors, female straight and right-angle

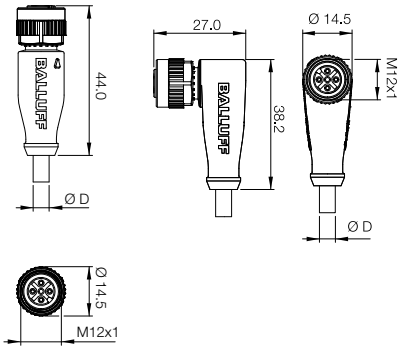

IO-Link master blocks

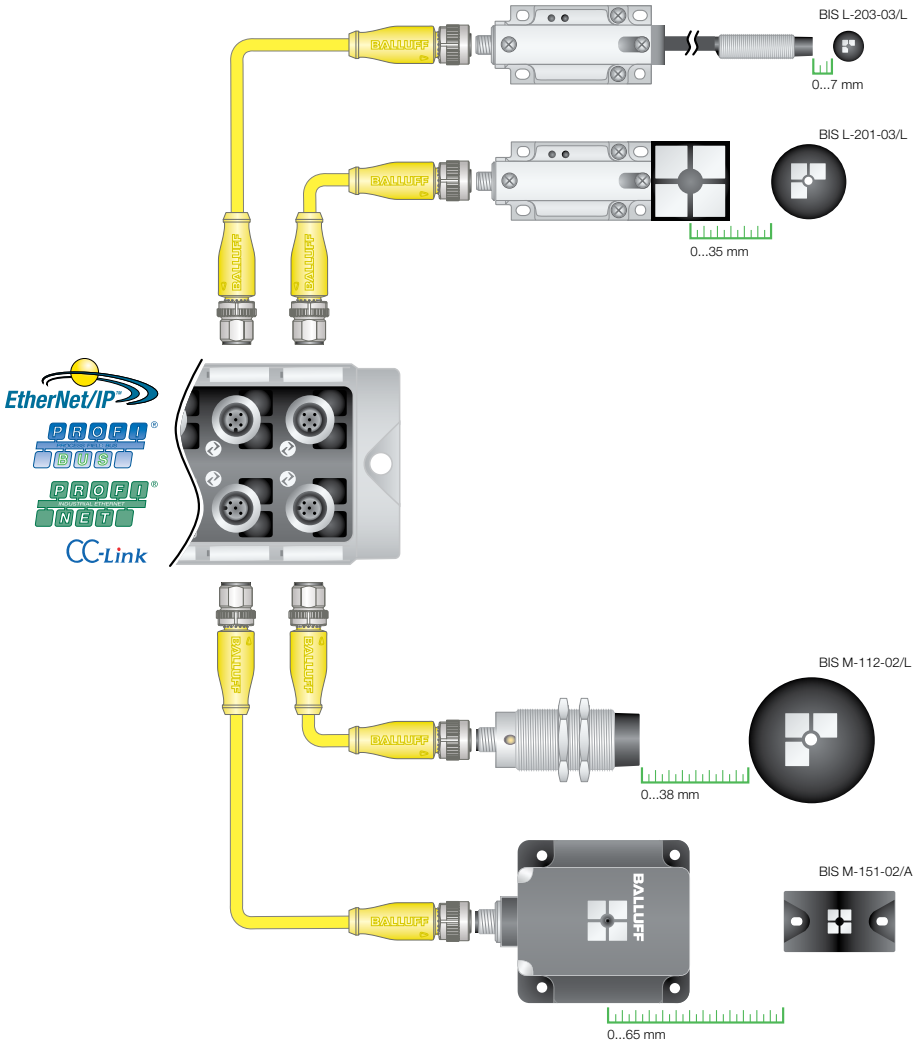

Network Protocol	EtherNet/IP	DeviceNet	EtherCAT	ProfiNet	Profibus	
Addressing	Display	Display	Display	Display	Rotary Dials	
1 IO-Link / 4 RFID BIS VM or VL						
4 IO-Link / 4 Configurable						
4 IO-Link / 12 Configurable	**BNI004A** BNI EIP-502-105-Z015	**BNI005A*** BNI DNT-502-100-Z001*		**BNI004U** BNI PNT-502-105-Z015	**BNI003K** BNI PBS-502-001-Z001	
8 IO-Link / 8 Configurable	**BNI006A** BNI EIP-508-105-Z015		**BNI0077** BNI ECT-508-105-Z015	**BNI005H** BNI PNT-508-105-Z015		

*Consult factory for availability

IO-Link master blocks

Flexible IO-Link Master Blocks
Each port of the Balluff IO-Link master block can be configured to fit any IO-Link and/or discrete application. The top 4 ports can be configured as NO/NC inputs, outputs, or diagnostic points depending on the block type. The bottom 4 ports can be configured as IO-Link or as any of the discrete settings, depending on the block type.

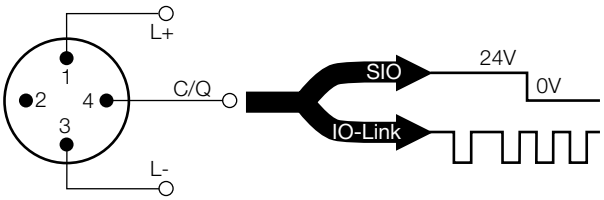

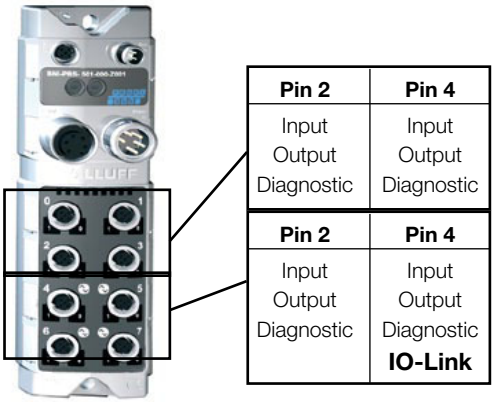

Pin 2	Pin 4
Input Output Diagnostic	Input Output Diagnostic
Pin 2	**Pin 4**
Input Output Diagnostic	Input Output Diagnostic **IO-Link**

*Only available in configurable versions

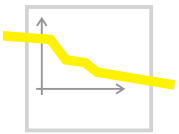

Reduce Costs
- Connect devices with standard sensor/actuator cordset
- Simplify cordset stocking with universal M12 standard connectors on IO-Link devices
- Secure investment with open standard, valid from all manufacturers
- Future-proof, with greatest flexibility in project planning

Reduce Maintenance
- Capability of plug, play, and walk away
- Automatic read adjustment of parameters
- Reliable error detection
- Troubleshoot a point-to-point connection, rather than a network

Reduce Engineering and Commissioning
- Commissioning performed by the controller, not at each individual IO-Link device
- Scalability of each IO-Link port
- Same architecture for different network protocols
- Fewer network nodes and IP addresses to commission

Increase Uptime
- Recipe driven parameterization of IO-Link devices
- Health diagnostics down to the IO-Link device level
- Network cable can be removed from harsh areas, replaced by standard sensor/actuator cordsets
- Continuous monitoring of process parameters

Profibus Display	Profibus Rotary Dials	Profibus Rotary Dials	Profibus Display	CC-Link Display
			BIS00T3 BIS V-6102-019-C001	
	BNI003P BNI PBS-507-001-Z011	**BNI0030** BNI PBS-504-001-K008		
BNI005R BNI PBS-502-101-Z001				**BNI0040** BNI CCL-502-100-Z001

BIS U
BIS VM/VL
USB BIS V
Serial/IO/Power
BIS M/L
BIS C
ProfiBus
EtherNet
DeviceNet
CC-Link
IO-Link
Subnet16
Power cordsets
BVS
Unmanaged switches

BIS M Subnet16 network connectors

Version	ThinNet drop cable (male/female, M12, 5-pin)	Gateway drop cable (male/bare leads, M12, 5-pin, 3 m)
Ordering code	**Determined by cable length**	**BCC075U**
Part number	BDN C-D11-AC-EDD-01-_ _ _M	BDN C-D11-CN-EDN-01-030M
Connector	M12	M12 - bare leads
Protection* per IEC 60529	IP 68	IP 68
Ambient temperature range	-20...+105 °C	-20...+105 °C
Cable	PVC	PVC

Last two numbers of part number indicate length in meters.

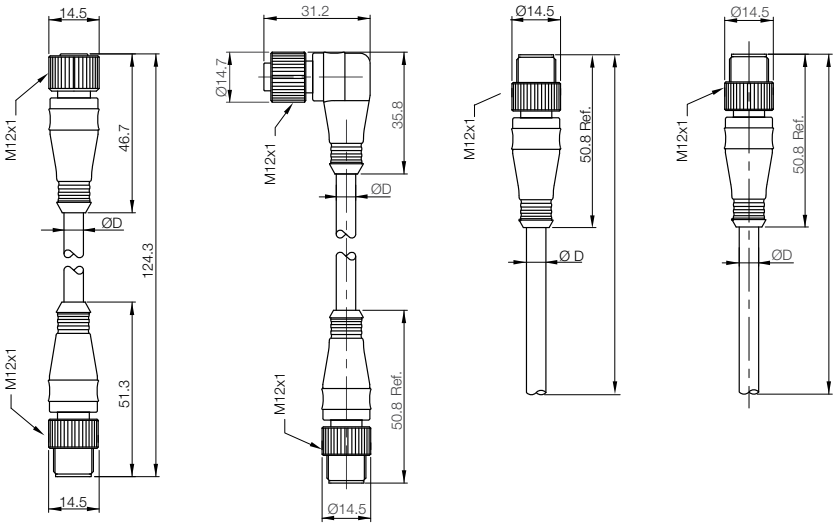

Version	Drop T connector (thicknet to thinnet) 7/8" male, 7/8" female, M12 female	Termination resistor (male, 7/8, thicknet)
Use	subnet16 thinnet drop	terminator for subnet16 thicknet
Ordering code	**BCC07WZ**	**BCC07Y9**
Part number	BDN T-DTE-AD-01	BDN R-CEA-01
Connector	7/8", M12	7/8"
Protection* per IEC 60529	IP 67	IP 67
Ambient temperature range	-20...+80 °C	-20...+80 °C
Resistor		

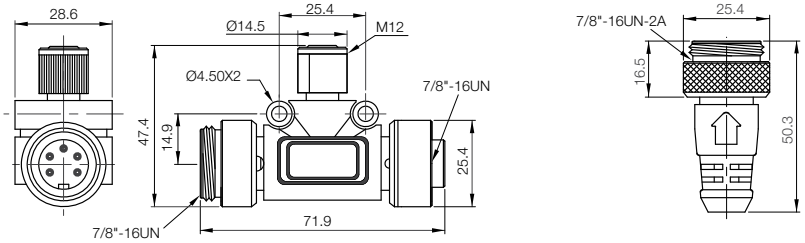

BIS M Subnet16 network connectors

Gateway connector (male/ M12, 5-pin field attachable connector)	Trunk cable (male/female, 7/8, 5-pin)	Power cable (female, 7/8, 5-pin bare leads, 5m)
BCC07AE	**Determined by cable length**	**Determined by cable length**
BDN C-F11-CN-NDN-01	BCC A315-A315-30-330-VS85N4-_ _ _	BCC A315-0000-10-030-VS85N4-_ _ _
M12 male	7/8"	7/8"
IP 68	IP 67	IP 67
-25...+90 °C	-40...+80 °C	-40...+80 °C
	PUR	PUR

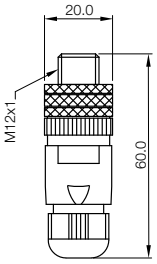

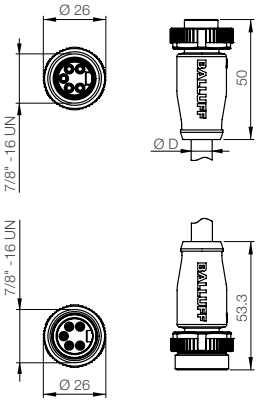

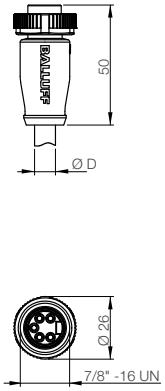

Standard lengths available:
006 = 0.6 m
010 = 1.0 m
020 = 2 m
030 = 3 m
040 = 4 m
050 = 5 m
060 = 6 m
070 = 7 m
080 = 8 m
090 = 9 m
100 = 10 m
120 = 12 m
150 = 15 m
200 = 20 m
300 = 30 m
500 = 50 m

Standard lengths available:
010 = 1.0 m
020 = 2 m
030 = 3 m
050 = 5 m
100 = 10 m
150 = 15 m
200 = 20 m
250 = 25 m

Termination resistor (male, M12, thinnet)	
terminator for subnet16 thinnet	
BCC07YC	
BDN R-CED-01	
M12	
IP 67	
-20...+80 °C	

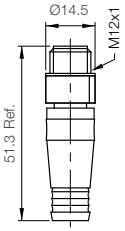

M12 and 7/8" power cordsets

7/8" Single-Ended

Type	7/8" Female (Int Threads)	7/8" Female (Int Threads)
Configuration	straight	right angle
Voltage Rating	300 V AC/DC	300 V AC/DC
Amperage	12 A (3-wire)/9 A (4- and 5-wire)	12 A (3-wire)/9 A (4- and 5-wire)
Conductor Cross-Section	16 AWG	16 AWG
3-wire US-Color Code	BCC A313-0000-10-071-VX43W6-_ _ _	BCC A323-0000-10-071-VX43W6-_ _ _
4-wire US-Color Code	BCC A314-0000-10-072-VX44W6-_ _ _	BCC A324-0000-10-072-VX44W6-_ _ _
4-wire DC-Color Code	BCC A314-0000-10-003-_X44W6-_ _ _	BCC A324-0000-10-003-_X44W6-_ _ _
5-wire DC-Color Code	BCC A315-0000-10-063-VX45W6-_ _ _	BCC A325-0000-10-063-VX45W6-_ _ _

Last two numbers of part number indicate length in meters.

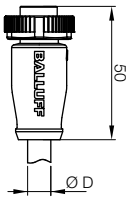

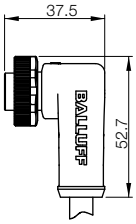

Description	Field attachable	Field attachable
Type	5-pin, female	4-pin, male
Version	for connecting to processors supply voltage	for connecting to IP 67 power supply
Ordering code	**BCC06ZN**	**BCC0709**
Part number	BCC M475-0000-1A-000-01X575-000	BCC A334-0000-20-000-51X4A5-000
Connector	M12 - field-attachable	7/8" - field-attachable
Degree of protection per IEC 60529	IP 67	IP 67
Ambient temperature	–25...+85 °C	–25...+85 °C

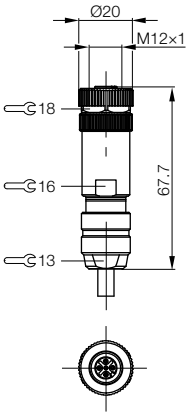

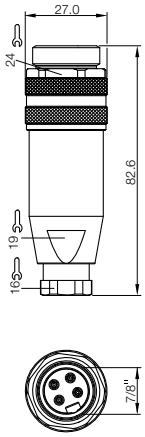

7/8" power cordsets

	7/8" Male (Ext Threads)	7/8" Male (Ext Threads)
	straight	right angle
	300 V AC/DC	300 V AC/DC
	12 A (3-wire)/9 A (4- and 5-wire)	12 A (3-wire)/9 A (4- and 5-wire)
	16 AWG	16 AWG
	BCC A313-0000-20-071-VX43W6-_ _ _	BCC A323-0000-20-071-VX43W6-_ _ _
	BCC A314-0000-20-072-VX44W6-_ _ _	BCC A324-0000-20-072-VX44W6-_ _ _
	BCC A314-0000-20-003-_X44W6-_ _ _	BCC A324-0000-20-003-_X44W6-_ _ _
	BCC A315-0000-20-063-VX45W6-_ _ _	BCC A325-0000-20-063-VX45W6-_ _ _

Standard cable jackets:
V = PVC
E = TPE

Standard lengths available:
020 = 2 m
050 = 5 m
100 = 10 m
150 = 15 m
200 = 20 m

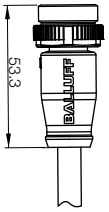

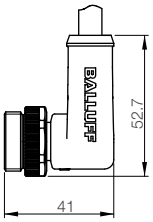

BIS U
BIS VM/VL
USB BIS V
Serial/IO/ Power
BIS M/L
BIS C
ProfiBus
EtherNet
DeviceNet
CC-Link
IO-Link
Subnet16
Power cordsets
BVS
Unmanaged switches

7/8" power cordsets

7/8" Single-Ended

Type	7/8" Female (Int Threads) to 7/8" Male (Ext Threads)	
Configuration	Straight - Straight	
Voltage Rating	300 V AC/DC	
Amperage	9 A	
Conductor Cross-Section	1.5 mm²	
5-wire DC-Color Code	**BCC A315-A315-30-335-VX45W6-_ _ _**	

Last two numbers of part number indicate length in meters.

Standard cable jackets:
V = PVC
E = TPE

Standard lengths available:
020 = 2 m
050 = 5 m
100 = 10 m

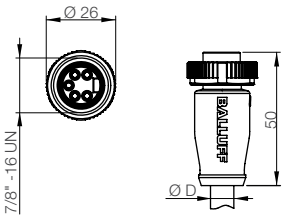

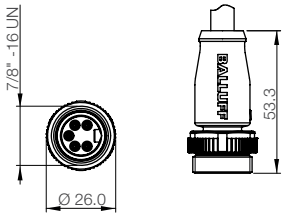

7/8" power cordsets

7/8" Female (Int Threads) to 7/8" Male (Ext Threads)	7/8" Female (Int Threads) to 7/8" Male (Ext Threads)	7/8” Female (Int Threads) to 7/8” Male (Ext Threads)
Straight - Right Angle	Right Angle - Straight	Right Angle - Right Angle
300 V AC/DC	300 V AC/DC	300 V AC/DC
9 A	9 A	9 A
1.5 mm²	1.5 mm²	1.5 mm²
BCC A315-A325-30-335-VX45W6-_ _ _	**BCC A325-A315-30-335-VX45W6-_ _ _**	**BCC A325-A325-30-335-VX45W6-_ _ _**

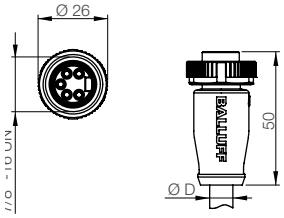

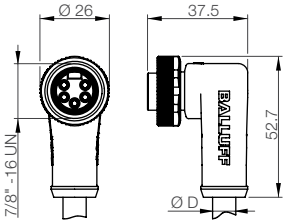

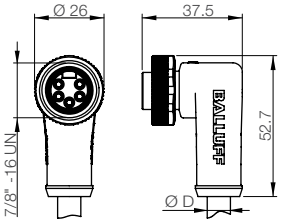

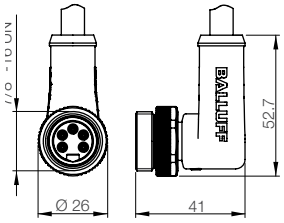

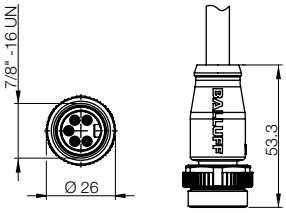

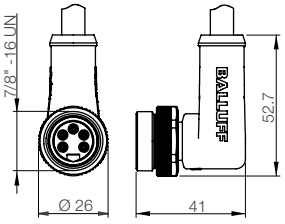

IS U
BIS VM/VL
USB BIS V
Serial/IO/ Power
BIS M/L
BIS C
ProfiBus
EtherNet
DeviceNet
CC-Link
IO-Link
Subnet16
Power cordsets
BVS
Unmanaged switches

Connectors for vision sensors BVS

Connector diagram and wiring	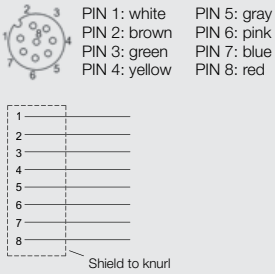	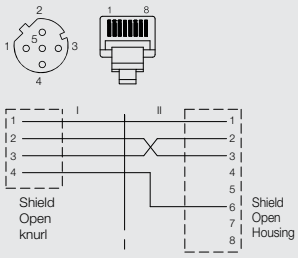	
Type	M12 female, straight	M12 female, straight /RJ45	
Power supply max. U_B	60 V DC	60 V DC	
Number of conductors × conductor cross-section	8×0.25 mm²	4×0.34 mm²	
Degree of protection as per IEC 60529	IP 67	IP 67/IP 20	
Ambient temperature T_a static/moving — PUR			
PUR shielded	–25...+80 °C/–50...+80 °C		
PVC			
Use	Connection cables for Vision Sensors BVS-E	Parameterization cables for Vision Sensors BVS-E	

Cable material	Length	Ordering code Part number		
PUR	2 m	**BCC0994** BCC M418-0000-1A-046-PS0825-020		
PUR	5 m	**BCC0995** BCC M418-0000-1A-046-PS0825-050		
PUR	10 m	**BCC0996** BCC M418-0000-1A-046-PS0825-100		
PUR	20 m	**BCC09HL** BCC M418-0000-1A-046-PS0825-200		
PUR	40 m	**BCC0AT8** BCC M418-0000-1A-046-PS0825-400		
PVC	2 m			
PVC	5 m			
PVC	10 m			
TPE	5 m		**BCC0E7T** BCC M415-E834-AG-672-ES64N8-050	
TPE	10 m		**BCC0E7W** BCC M415-E834-AG-672-ES64N8-150	

Other cable materials, colors, and lengths on request

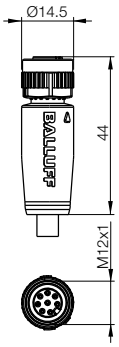

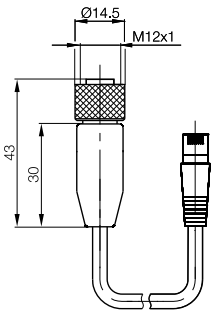

Industrial Connectivity

Connectors for vision sensors BVS

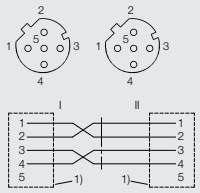

1) Shield to knurl

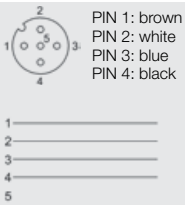

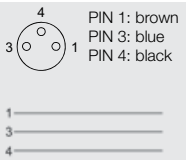

	M12 female, straight / M12 female, straight	M12 female, straight	M8 female, straight
	250 V DC	250 V DC	60 V DC
	5×0.34 mm²	4×0.34 mm²	3×0.34 mm²
	IP 67	IP 68	IP 67
		–25...+80 °C	–25...+90 °C/–25...+90 °C (UL 80 °C)
		–5...+80 °C	
	Connection cables for vision sensors BVS-E and BVS Monitor	Connection cables for BVS Monitor and lighting	Connection cables for coaxial lighting

	Ordering code		
	Part number		
	BCC0ANA	**BCC032F**	**BCC02M8**
	BCC M415-M415-5D-687-ES64N8-020	BCC M415-0000-1A-003-PX0434-020	BCC M313-0000-10-001-PX0334-020
	BCC0ANC	**BCC032H**	**BCC02M9**
	BCC M415-M415-5D-687-ES64N8-050	BCC M415-0000-1A-003-PX0434-050	BCC M313-0000-10-001-PX0334-050
		BCC032J	**BCC02MA**
		BCC M415-0000-1A-003-PX0434-100	BCC M313-0000-10-001-PX0334-100
		BCC0367	**BCC02NU**
		BCC M415-0000-1A-003-VX8434-020	BCC M313-0000-10-001-VX8334-020
		BCC0368	**BCC02NW**
		BCC M415-0000-1A-003-VX8434-050	BCC M313-0000-10-001-VX8334-050
		BCC0369	**BCC02NY**
		BCC M415-0000-1A-003-VX8434-100	BCC M313-0000-10-001-VX8334-100

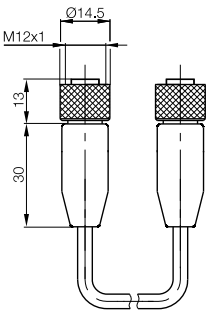

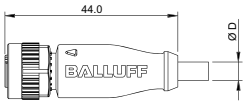

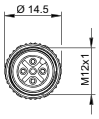

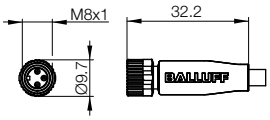

Ethernet 5-port switch IP 20
Ethernet 8-port switch IP 20
Ethernet 9-port switch IP 67

Ethernet-based network systems are gaining more and more importance in industrial automation. Balluff provides a wide variety of Ethernet-based systems and network components such as Profinet or Ethernet/IP for machine and plant equipment.

With Balluff, you receive a complete system so that you can use Ethernet to link Ethernet system components easily. The Ethernet product line was expanded with the addition of 5-port and 8-port Ethernet switches for this reason.

The switch makes it possible to connect 5-port and 8-port Ethernet devices to a component radially. The RJ45 ports and the 10 and 100 Mbps transmission rates support this. The transfer speed is automatically set via the auto-negotiation function. Wiring errors are reliably ruled out by the autocrossing function. This is because the module does not identify on its own what type of cable is being used.

Communication	Unmanaged switch
Version	No display
Ordering code	**BNI000F**
Part number	BNI EIP-950-000-Z009
Supply voltage U_B	24 V DC
Module current consumption	80...100 mA
Module status indicator: Mod LED	Yes
Network status indicator: Net LED	Yes
Network data transfer rate: Link LED	Yes
Port status indicator	Black, red, yellow, green
Connection: Fieldbus	M12 female, D-coded
Connection: AUX power	7/8" male, 4-pin
Number of Ethernet ports	9
Degree of protection as per IEC 60529	IP 67
Operating temperature	0...+55 °C
Storage temperature	–25...+70 °C
Housing material	Cast zinc, coated
Transfer rates	10/100 Mbps, automatic detection, full-duplex
Degree of protection	IP 67
Max. switching frequency	32 gigabyte
Overload protection	IEEE 802.3
IP address space	IPv4
Approvals	ODVA, UL-CUL, CSA, CE

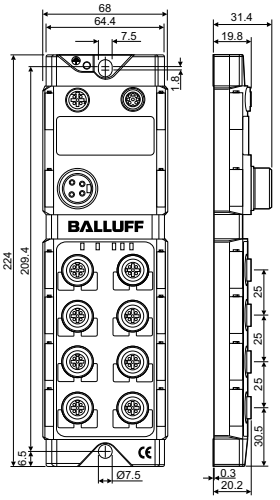

Unmanaged switches – port switches

Communication	Ethernet	Ethernet
Version	Ethernet switch	Ethernet switch
Ordering code	**BNI005E**	**BNI0067**
Part number	BNI TCP-951-000-E028	BNI TCP-952-000-E029
Ports	5×RJ45 Spring force clamp	8×RJ45 Spring force clamp
System power supply	0.2...2.5 mm²	0.2...2.5 mm²
Supply voltage U_B	12...48 V DC	2×12...30 V DC, redundant
Transfer rate	10/100 Mbps full duplex Auto crossing	10/100 Mbps full duplex Auto crossing
Operating modes	Auto negotiation	Auto negotiation
Communication status	Link/run LED, (yellow/green)	Link/run LED, (yellow/green)
Supply voltage	LED (green), power	LED (green), power
Degree of protection	IP 20	IP 20
Housing	Black plastic	Black plastic
Temperature range	–10...+60 °C (storage temperature –25...+70 °C)	–10...+60 °C (storage temperature –25...+70 °C)
Fastener	Snaps onto support rail TH35 (EN60715)	Snaps onto support rail TH35 (EN60715)
Weight	152 g	363 g

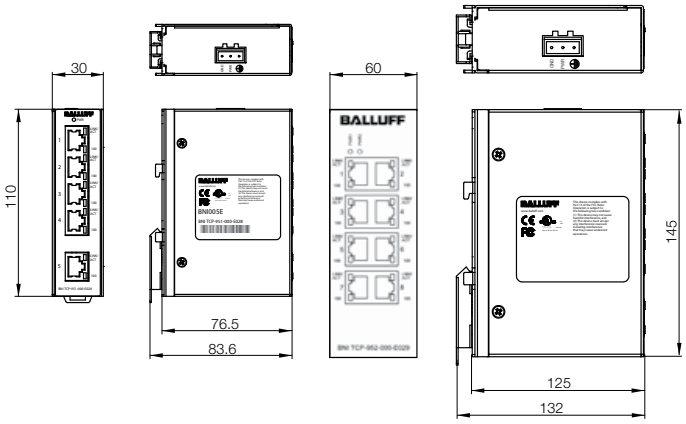

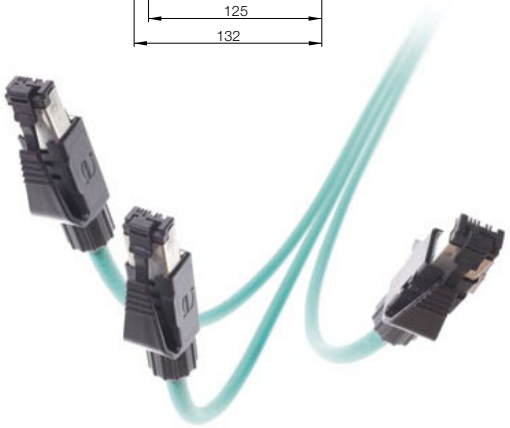

Accessories

Accessories – A Selection

Accessories specifically designed for BIS and BVS products can save you time and money in completing your installation. Accessories include mounting brackets, enclosures, lighting for BVS and special application components like handles and power supplies.

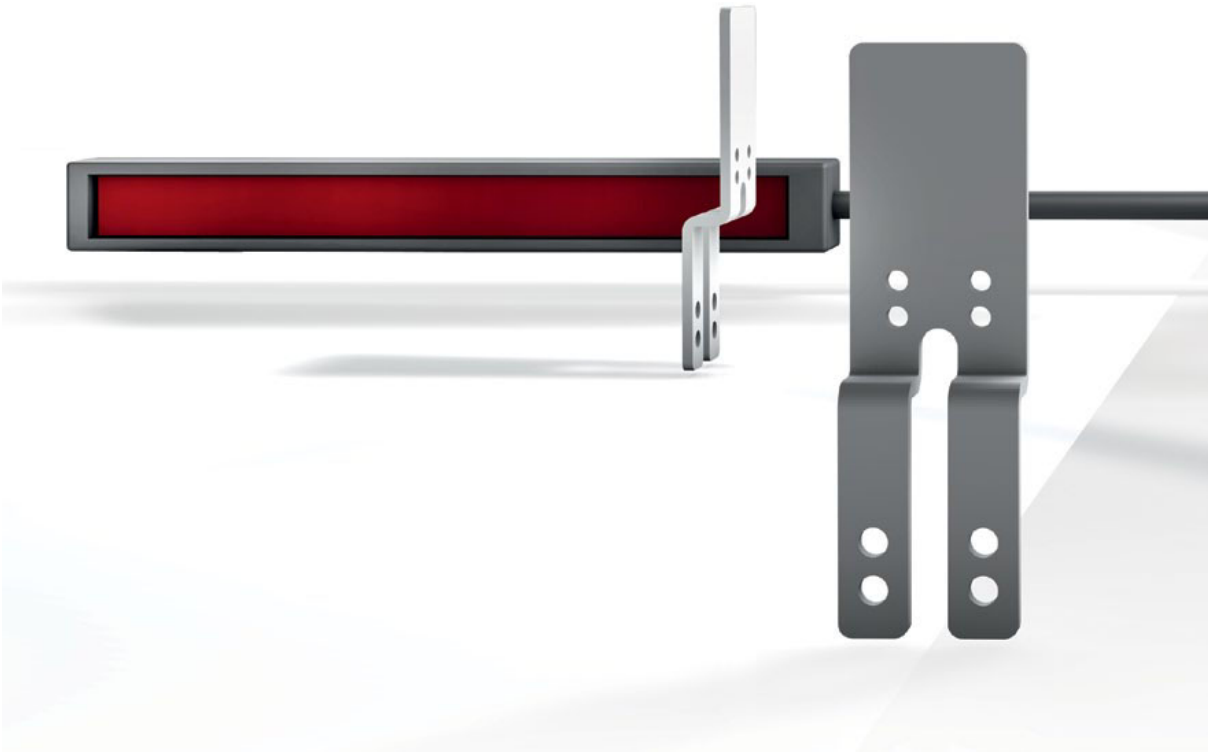

Accessories – A Selection
Contents

BIS Industrial RFID accessories	316
BVS Vision Sensors accessories	328
BAE Lights for Vision Sensors	334
Power supplies	350

To see our complete line of accessories, visit:
www.balluff.com

Technical information and definitions can be found on **page 354**

Description	**Fastening plate**	
Use	For BIS U processor	
Ordering code	**BAM01KN**	
Part number	BIS Z-HW-004	

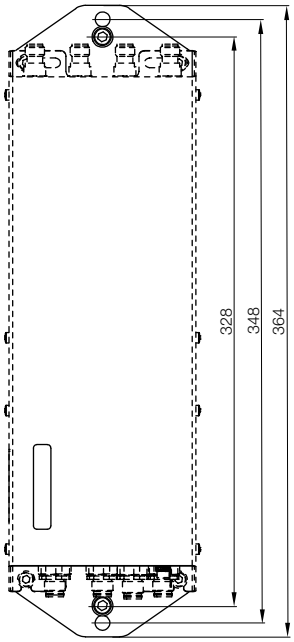

For mounting on profile rail,
steel screw connection.

Included for mounting are:
2 BIS Z-HW-004 retaining plates
4 socket cap screws with
hexagon socket M5×10 DIN 912, A2, 8.8
2 socket cap screws with
hexagon socket M6×12 DIN 912, A2, 8.8
4 washers 5 DIN 125, A2
2 washers 6 DIN 125, A2

BIS Industrial RFID accessories

Fastener set	**Mounting set**	**RJ45 coupling**
For BIS U-100 tag	For BIS U-102 tag	For Ethernet TCP/IP
BAM01LW	**BAM01YK**	**BCC09N2**
BIS Z-SP-003	BIS Z-HW-005	BCC E878-0000-Z1-41X8T4

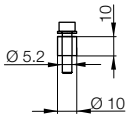

Fastener set consisting of:
2 plastic distance rollers
2 socket cap screws with hexagon socket, ISO4762-M 5X22-8,8-A2B
2 washers D 125-A 5,3-ST-A2P

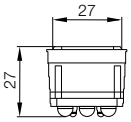

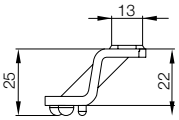

Included for mounting are:
2 mounting brackets
4 panhead cap screws
4 nuts

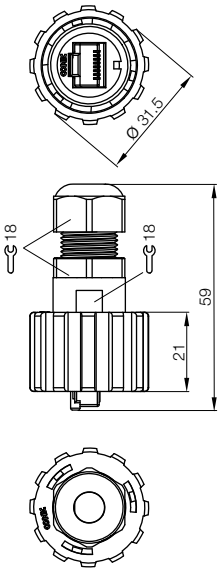

Description	Crimping tool for RJ45
Ordering code	**FHW0003**
Part number	11023834

BIS Industrial RFID accessories
BVS Vision Sensors accessories
BAE Lights for Vision Sensors
Power supplies

BIS Industrial RFID accessories

Description	**Antenna holder**	**Clamping cylinder**
Use	For BIS U-301... and BIS U-302...	For 1 mounting rod **Ø 12 mm**
Ordering code	**BAM01JK**	**BAM0031**
Part number	BIS Z-HW-003	BMS CS-M-D12-IZ
Material	Stainless steel	Cast zinc

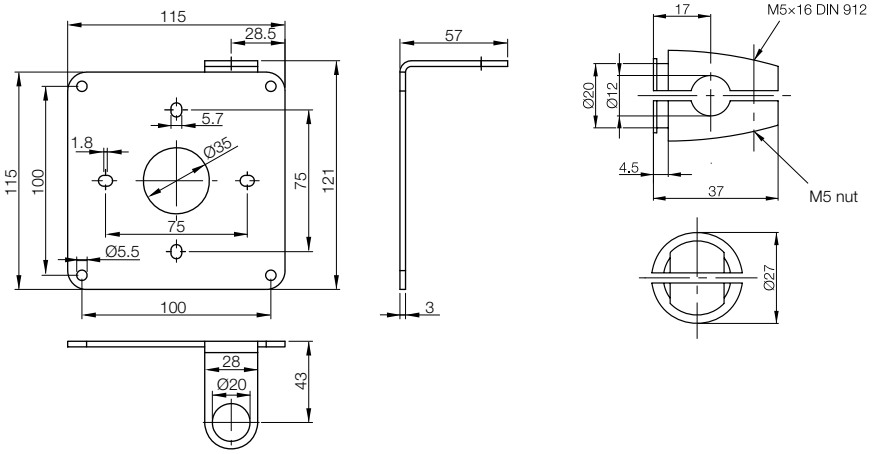

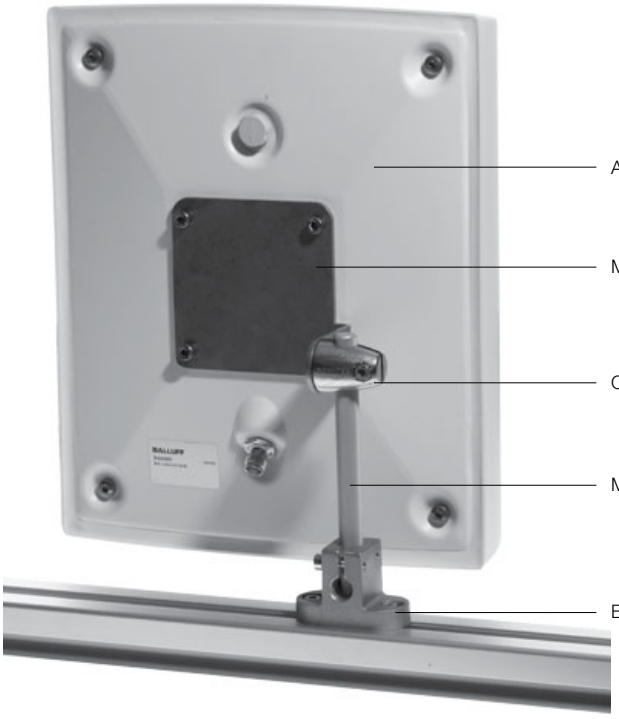

Accessories – A Selection

BIS Industrial RFID accessories

	Base holder	**Mounting rod clamp**	**Mounting rod Ø 12 mm**
	For 1 mounting rod Ø 12 mm (vertical or horizontal mounting on base plates or profiles)	For connecting 2 mounting rods Ø 12 mm	Knurled, length 150 mm
	BAM002W	**BAM002Z**	**BAM002R**
	BMS CU-M-D12-A040-00	BMS CC-M-D12-B-00	BMS RS-M-D12-0150-00
	Aluminum	Aluminum, anodized	Aluminum, anodized

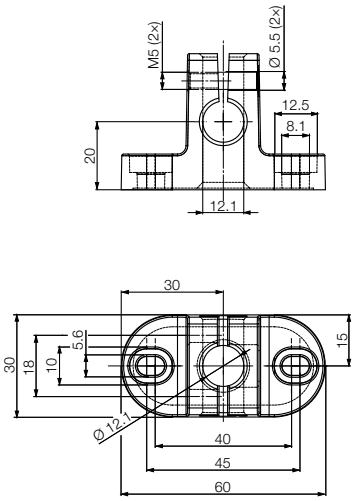

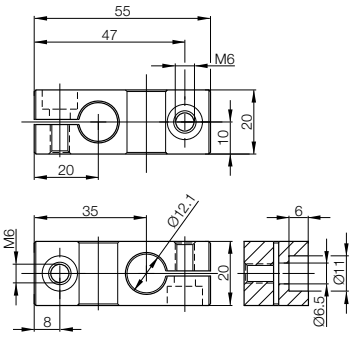

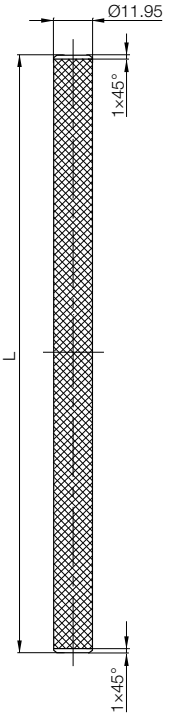

The mounting rods are knurled full-length. This prevents any position change.

BIS Industrial RFID accessories

Description	**Mounting plate**	**Mounting plate**
Use	For BIS C-324	For BIS C-324
Ordering code	**BAM00JW**	**BAM01TM**
Part number	BES Q40-HW-1	BAM MC-XA-016-Q40-1
Material	Aluminum, anodized	Aluminum, anodized

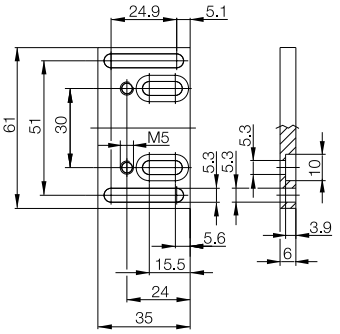

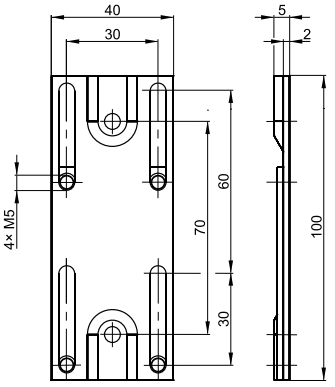

3 different mounting options

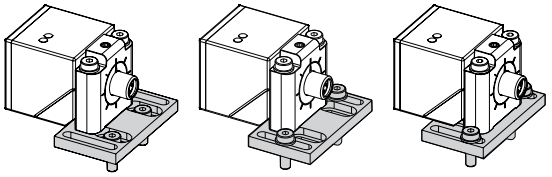

Wired BIS C-324 attached to this mounting plate can be displaced up to 30 mm. The BIS C-324 can be moved and secured at the required point by loosening the sensor fastening screws (M5×25, included in the delivery). Tighten screws! The mounting plate consists of corrosion-resistant aluminum.

BIS Industrial RFID accessories

Description	**Retaining system**	**Retaining system**
Use	For BIS C-324	For BIS C-324
Ordering code	**BAM00JU**	**BAM00JT**
Part number	BES HS-01-P1-C8/Q40	BES HS-01-P1-C16/Q40
Material	Aluminum, anodized and brass	Aluminum, anodized and brass

This retainer system was designed for securing BIS C-324 sensors to profile sections.

The mounting set consists of:
- 1 mounting plate
- 2 slot nuts
- 2 socket cap screws M5×10 DIN 912 galvanized
- 2 washers Ø 5,3 DIN 533
- 2 socket cap screws
- M5×40 ISO 4762M5×40, ISO 4762

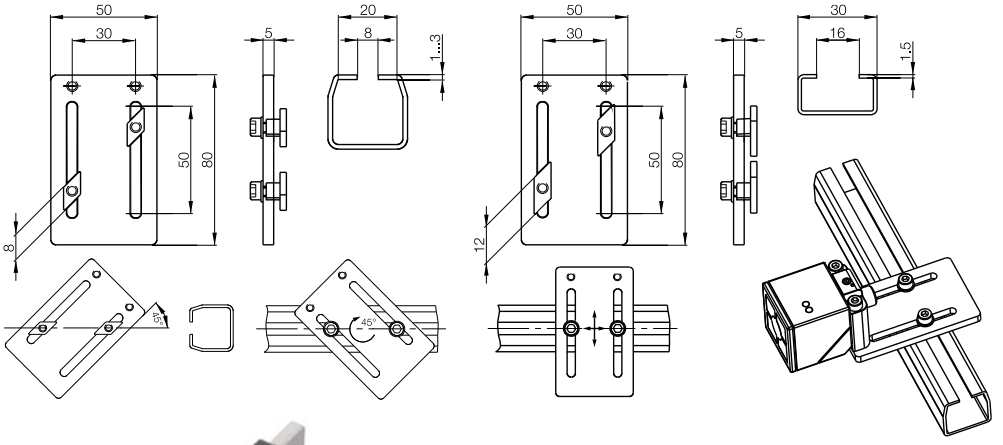

Description	**Mounting rail holder set**
Use	For processor units BIS C/L/M/S-600_
Ordering code	**BAM012L**
Part number	BIS Z-HW-001
Material	Aluminum, anodized and PA 6

For easy adjustment and attachment to profile sections.

Mounting set BIS Z-HW-001 includes:
- 1 retaining bracket
- 1 mounting rail holder
- 4 socket cap screws with hexagon socket, according to DIN 912 (M4×16)
- 2 socket cap screws with slot, according to DIN 84 (M3×8)

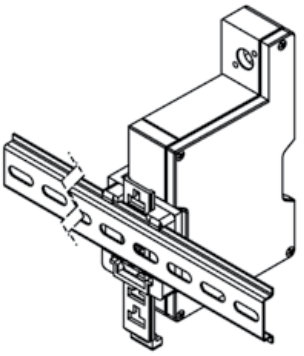

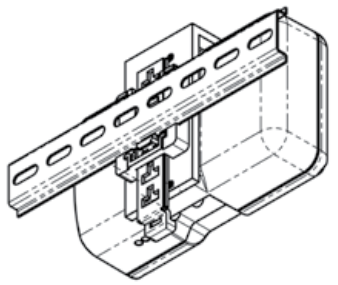

BIS Industrial RFID accessories

Description	**Mounting bracket**	**Mounting clamp holder**
Use	For mounting on BOSCH pallet conveyor system TS1 and TS2)	For BIS VM read/write head (included in the BIS VM-3_ _ head package)
Ordering code	**BAM01MY**	**BAM01Y3**
Part number	BAM MB-XA-010-B07-4	BAM MC-XA-018-B04-4
Material	Stainless steel	Stainless steel

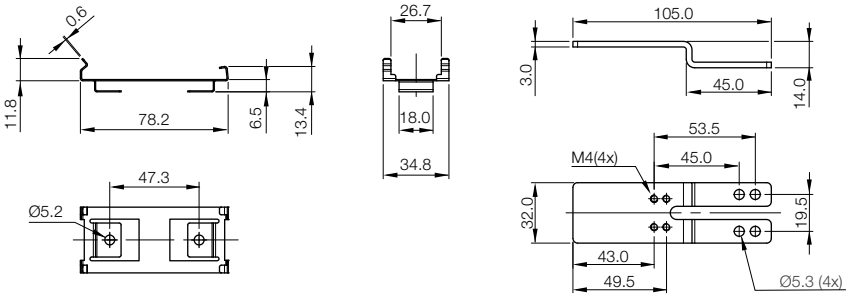

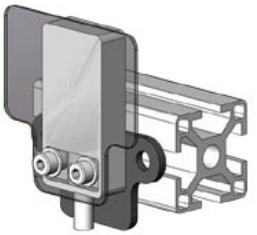

Description	**Mounting bracket**	**Shield**
Use	For mounting on FlexLink puck conveyor system	For mounting on FlexLink puck conveyor system
Ordering code	**BAM01UH**	**BAM01Y8**
Part number	BAM MB-XA-012-B09-4	BAM PC-AM-010-4
Material	Stainless steel	Stainless steel

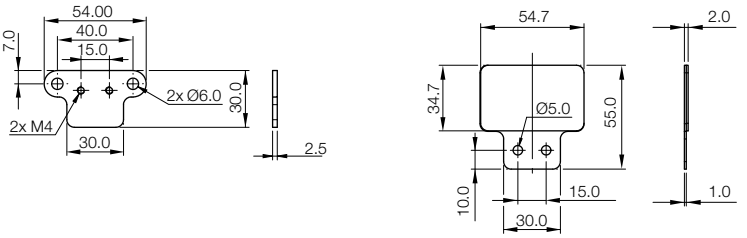

BIS Industrial RFID accessories

Description	**Mounting clamp without positive stop**	**Mounting clamp with positive stop**	**Mounting clamp with positive stop**
Use	For Ø 18 mm and M18 housings	For Ø 18 mm and M18 housings with mounting plate for vertical seating	For Ø 30 mm and M30 housings
Ordering code	**BAM00F7**	**BAM00F9**	**BAM00HU**
Part number	BES 18,0-KB-3	BES 18,0-KB-3-F-SA1	BES 30,0-KB-3-F
Material	PA 6	PA 6	PA 6

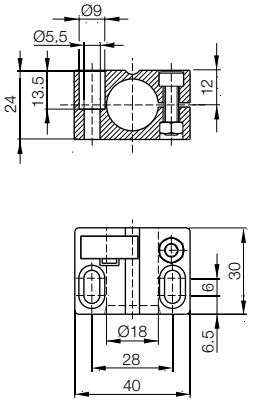

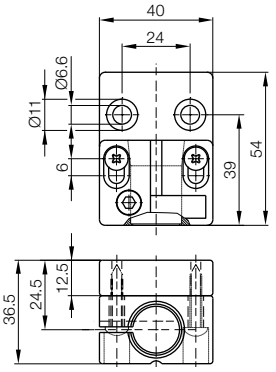

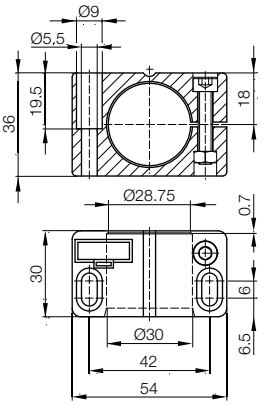

Description	**Mounting bracket**	**Mounting bracket**
Use	For M18 sensors	For M30 sensors
Ordering code	**BAM00EY**	**BAM00HH**
Part number	BES 18-HW-1	BES 30-HW-1
Material	Aluminum, anodized	Aluminum, anodized

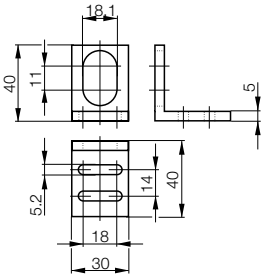

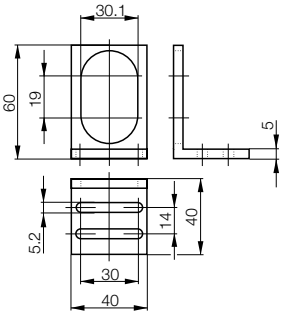

BIS Industrial RFID accessories

Description	**Mounting cuff**	**Mounting cuff**	**Mounting cuff**	**Mounting cuff**
Hole diameter	Ø 14.5 mm	Ø 16 mm	Ø 18 mm	Ø 30 mm
Ordering code	**BAM00EM**	**BAM00ET**	**BAM00F2**	**BAM00HN**
Part number	BES 14,5-BS-1	BES 16,0-BS-1	BES 18,0-BS-1	BES 30,0-BS-1
Material	PA 6	PA 6	PA 6	PA 6

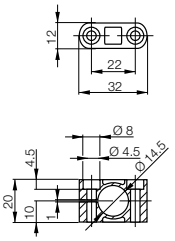

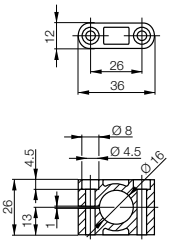

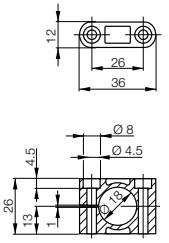

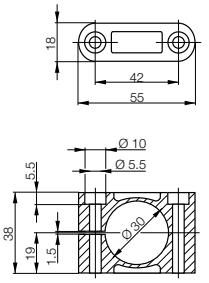

Description	**Clamp with positive stop**	**Clamp with positive stop**	**Clamp with positive stop**
Use	For sensors **Ø 18 mm** and **M18** with thread length ≥ 30 mm	For sensors **Ø 30 mm** and **M30** with thread length ≥ 30 mm	For sensors **Ø 30 mm** and **M30** with thread length ≥ 50 mm
Ordering code	**BAM00FT**	**BAM00J6**	**BAM00J4**
Part number	BES 18,0-KH-2S	BES 30,0-KH-2S	BES 30,0-KH-2L
Material	Brass, coated	Brass, coated	Brass, coated

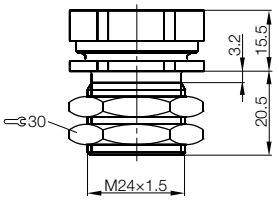

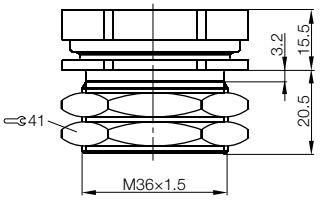

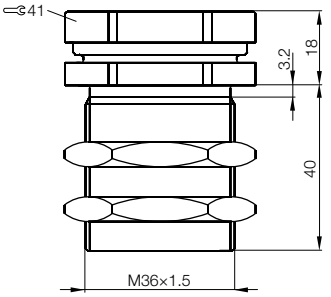

Accessories – A Selection

BIS Industrial RFID accessories

Description	Nut M18×1	Nut M30×1.5	Nut M18×1	Nut M30×1.5	Nut M18×1	Nut M30×1.5
Ordering code	**BAM01WJ**	**BAM01WK**	**BAM01W4**	**BAM01W5**	**BAM01WL**	**BAM01WM**
Part number	BAM MC-XA-021-M18-4	BAM MC-XA-021-M30-4	BAM MC-XA-021-M18-2	BAM MC-XA-021-M30-2	BAM MC-XA-021-M18-A	BAM MC-XA-021-M30-A
Material	Stainless steel	Stainless steel	Brass, coated	Brass, coated	Plastic	Plastic

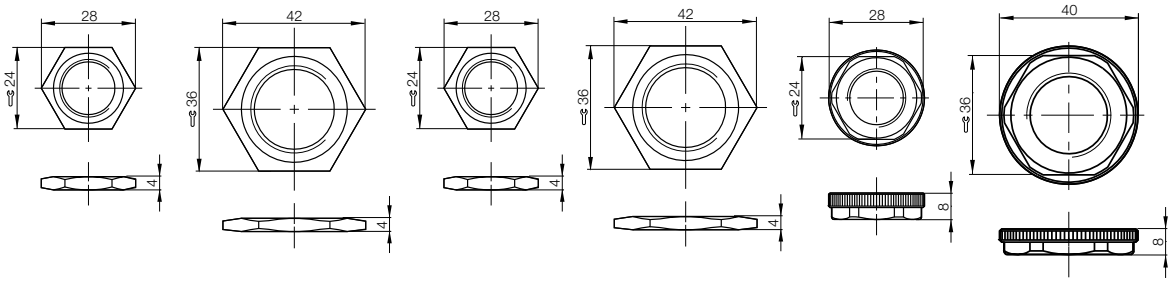

Description	Spacer
	For data carriers when mounting on metal
Ordering code	**BAM018M**
Part number	BIS Z-SP-001
Material	POM

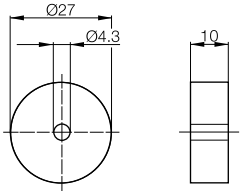

BIS Industrial RFID accessories

Description	**Connection cable**	**Handle**
Use	Connecting cable for BIS M-4_ _ systems with coupling for BIS C-703-A power supply and RS232 interface	For read/write head BIS C-300-_ _
Ordering code	**BCC00T2**	**BAM012A**
Part number	BIS Z-AK-001-PU1-03	BIS C-300-HG1
Degree of protection per IEC 60529	IP 40 (only when connected)	
Ambient temperature range T_a	0...+70 °C	–20...+85 °C
Storage temperature		0...+70 °C
Material		POM

Power supply

Ordering code	**BAE0049**
Part number	BIS C-703-A

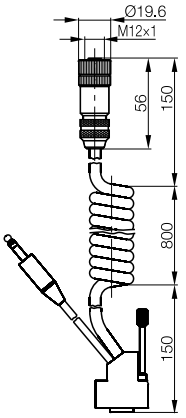

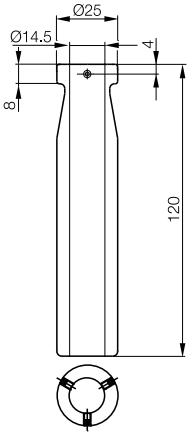

M18 type

Description	**Hand grip for ergonomic use**
Use	For read/write heads or read/write heads with integrated processors
Ordering code	**BAM012J**
Part number	BIS Z-HG-002

M30 type

Description	**Hand grip for ergonomic use**
Use	For read/write heads or read/write heads with integrated processors
Ordering code	**BAM012K**
Part number	BIS Z-HG-003

Description	**Machine tool tag adaptor**
Use	Adapts BIS C-122 data carriers to 12 mm Ø by 8 mm deep bore hole
Ordering code	**BAM0127**
Part number	BIS C-122-AD-1

Description	**Machine tool tag adaptor**
Use	Adapts BIS C-122 data carriers to 12 mm Ø by 6 mm deep bore hole
Ordering code	**BAM0128**
Part number	BIS C-122-AD-2

Software coupling BIS processor unit for Siemens Simatic S7
For fast integration into the controller. Save time and money with preconfigured functions. Function modules for linking a Processor with a Profibus option to a Simatic S7 controller.
The function modules offer the full functionality of the Balluff Processors. Data are exchanged through the I/O section of the controller.

Advantages:
- Fast startup
- Easy to use
- Full command set

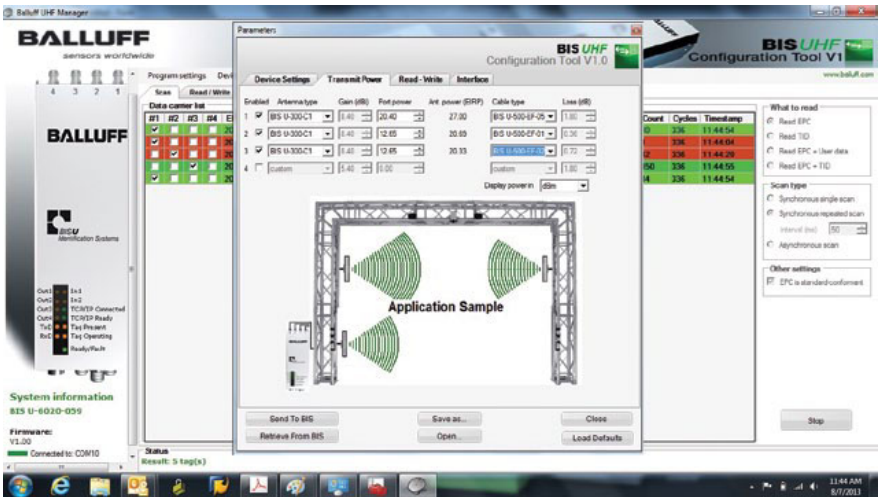

BIS UHF Manager
The BIS UHF Manager makes setting up and parameterizing the multi-channel BIS U system faster and more logical. It allows for individual antenna power, communication and performance setting, and allows tag test reading and writing with the need for custom interfacing.

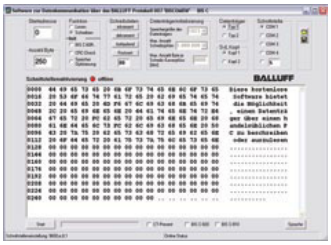

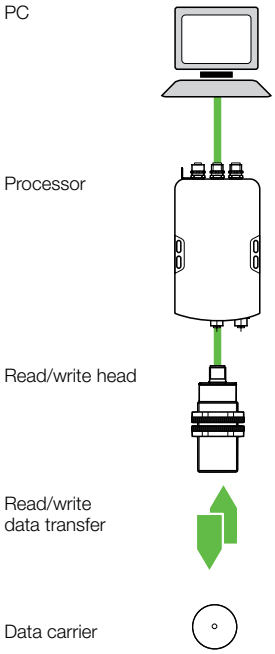

Service tools – for easy startup
Save time and money with included software for simple startup of your BIS system. Every processor comes with this CD-ROM including service tools to assist you.

BISCOMRW or Dashboard
This free software allows you to read or program a data carrier using any common PC.

Requirements:
Serial port or USB, optional USB to RS232 converter can be used. Windows 7, XP or Windows 2000. CD-ROM drive.

Processor:
Any processor using Balluff Protocol (-007) or Dashboard compatible versions and built-in serial port.

Functions:
- Read data carrier and display the data in ASCII and hex format.
- Edit data and write data to the data carrier.
- Initialize data carrier for the CRC function.

BIS Industrial RFID accessories
BVS Vision Sensors accessories
BAE Lights for Vision Sensors
Power supplies

BVS Vision Sensors accessories

Mounting is part of optimal integration of the BVS Vision Sensor. The variety of different mounting options allows you to integrate your BVS ideally into your machine. Balluff accessories are perfectly matched to our sensors.

With flexible Balluff accessories, you can position the BVS quickly without elaborate preparatory work or time-consuming planning, even if space is limited. You save material and time by using the right mounting element.

Description	**Mounting bracket for Vision Sensor BVS**	
Use	For mounting on base plates or use of clamping cylinders and mounting system	
Ordering code	**BAM00WN**	
Part number	BVS Z-MB-01	
Material	Stainless steel	

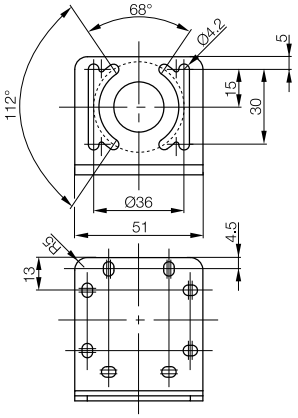

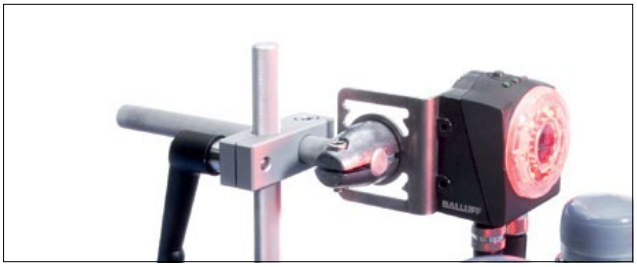

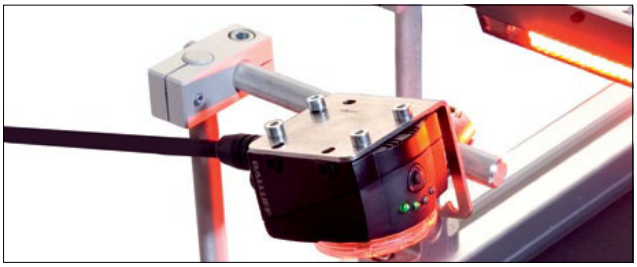

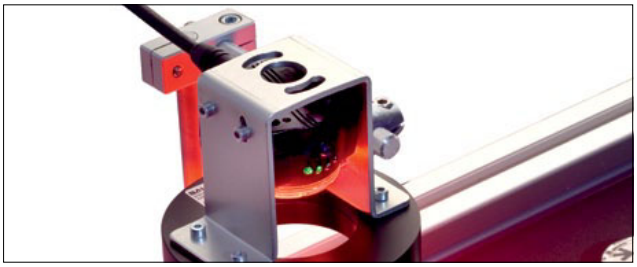

Mounting bracket for Vision Sensor BVS and ring light BAE	**Mounting bracket for line and background lights BAE**
For mounting on base plates or use of clamping cylinders and mounting system	For mounting on base plates or use of clamping cylinders and mounting system
BAM01AC	**BAM01AE**
BAM MB-XA-003-B03-1	BAM MB-XA-002-B02-1
Aluminum, anodized	Aluminum, anodized

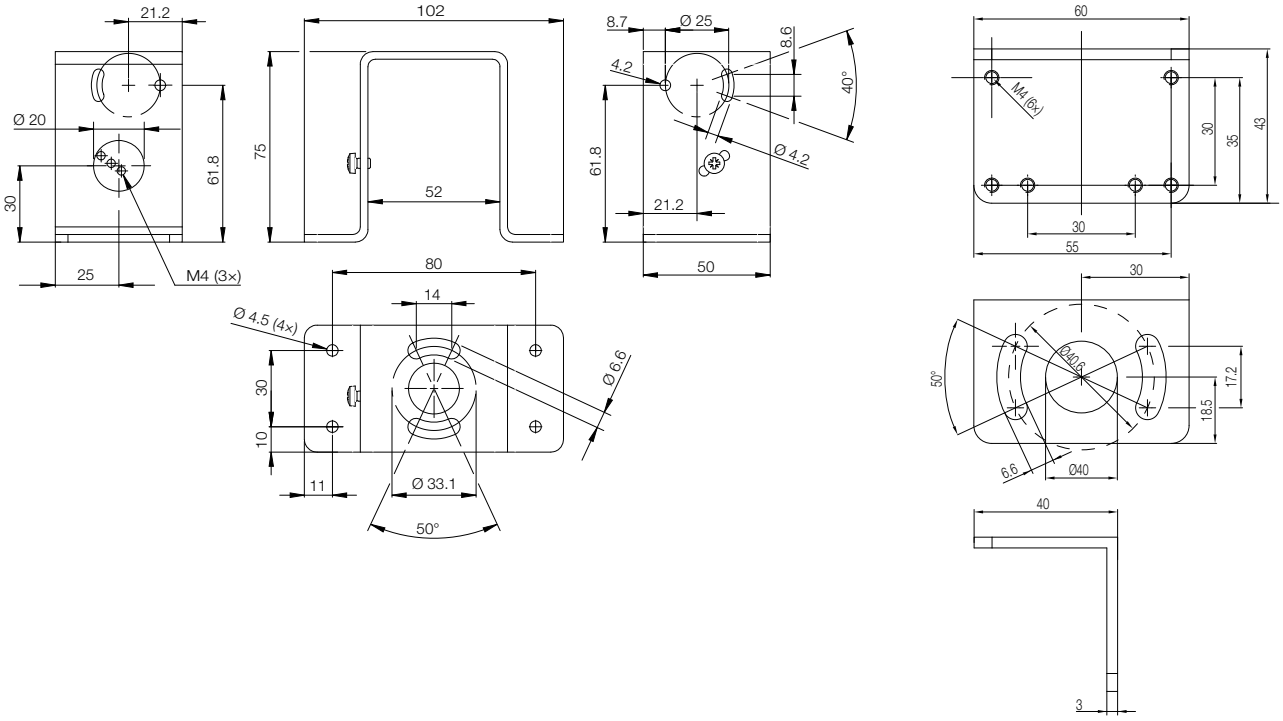

BIS
Industrial
RFID
accessories
**BVS
Vision
Sensors
accessories**
BAE
Lights
for Vision
Sensors
Power
supplies

3D sensor holder with quick-change plate
The Balluff 3D sensor holder with quick-change plate for industrial image processing is a novelty on the market. Originally conceived for vision sensors, this multitalented solution can also hold other sensors of similar size. This only requires replacing the sensor-specific change plate. The first holders are already being used successfully in the automotive industry.

Every desired solid angle can be configured, allowing the sensor to be aligned precisely. Its position even remains intact if the sensor has to be replaced. That helps minimize downtimes. Simply removing the sensor with the quick-change plate from the holder is enough. An optionally used safety screw provides protection from tampering as needed. Without the correct tool, the sensor cannot be removed.

The industry-ready holder made of anodized aluminum makes its case by being particularly easy and practical to operate. It fits on almost all common installation profiles and can be fastened directly to a machine frame, a worktop or a pallet with 3 holes. In addition, it offers you substantial design freedom since the base, plate and holder are installed separately. The holder and change plate can be ordered separately.

Special properties:
- Quick selection
- Exact alignment
- Stable, robust holder systems
- Ease of handling

BVS Vision Sensors accessories

Description	**3D holder system**	**3D holder system**
Version	Holder for quick-change plate	Quick-change plate
Ordering code	**BAM01YT**	**BAM01YP**
Part number	BMS CUJ-M-S25-D045-00	BMS CS-M-S25-DX15-00
Material	Aluminum, anodized	Aluminum, anodized

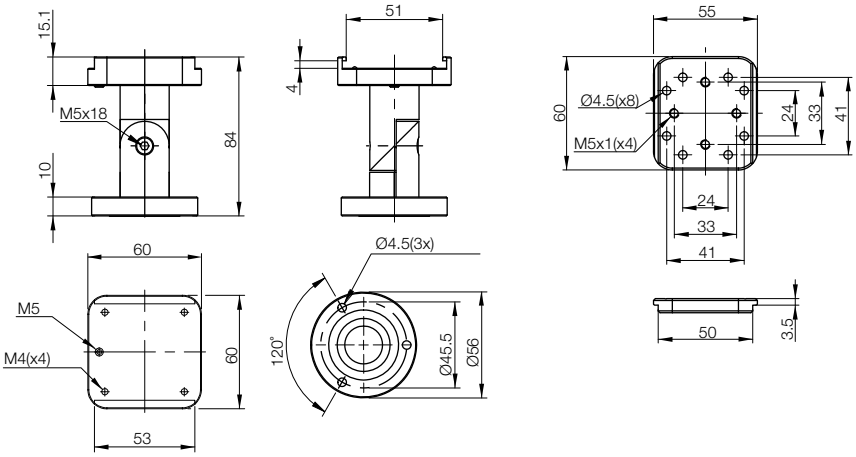

BIS
Industrial
RFID
accessories

**BVS
Vision
Sensors
accessories**

BAE
Lights
for Vision
Sensors

Power
supplies

BVS Vision Sensors accessories

Description	**Lock for Vision Sensor BVS focus ring**	**Display housing for BVS monitor**
Use	For locking the preset focus	For mounting of clamping cylinders and mounting system BMS
Ordering code	**BAM0206**	**BAM01A8**
Part number	BAM FK-VS-002-03-1	BAM PC-AE-002-1
Material	Aluminum, anodized	Aluminum, anodized

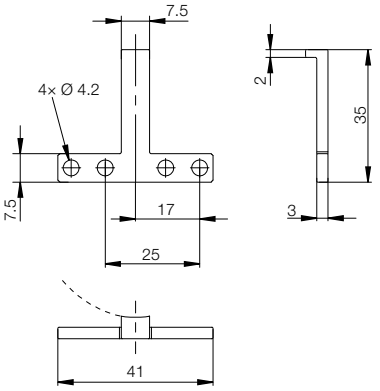

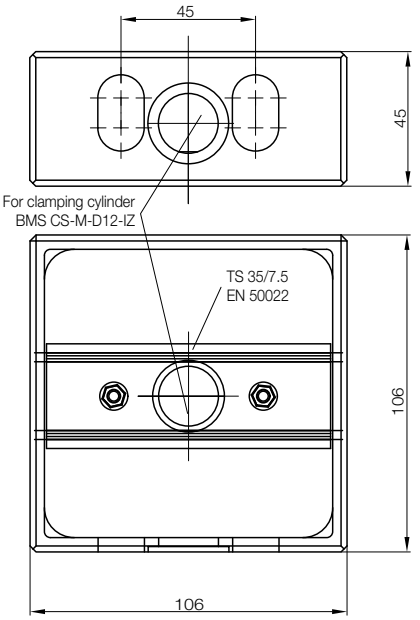

Focus ring lock
BAM FK-VS-002-03-1
The preset focus is locked and cannot be readjusted. Errors caused by inadvertently adjustment of the focus are therefore prevented. If the focus needs to be readjusted, the focus lock can be removed in seconds.

Accessories – A Selection

BVS Vision Sensors accessories

Optional IP 67+ housing for BVS Vision Sensors

Balluff now provides an optional housing for splash water areas and other problematic environments for all sensors in the Vision Sensor family. With its IP 67+ protection, it also provides safe protection during long-term use in harsh environments. With a few simple hand movements, the sensor is easily integrated in the robust housing and then mounted on a machine or system. All functions are then available as usual without any loss.

- Rugged housing
- Degree of protection IP 67+
- Flexible handling
- Simply assembly and mounting
- Full range of sensor functions
- Inexpensive acquisition

Description	**Protective housing for BVS Vision Sensors**
Use	For long-term use in harsh environments
Ordering code	**BAM01RR**
Part number	BAM PC-VS-008-1
Dimensions	175×80×62 mm
Mounting	M4 screws (163×52 mm)
Connection	Screwed cable gland M25×1.5 (1× Ø 5 mm, 1× Ø 6 mm)
Degree of protection per IEC 60529	IP 67
Housing material	Cast aluminum, lacquered
Optical surface	Anti-reflective glass

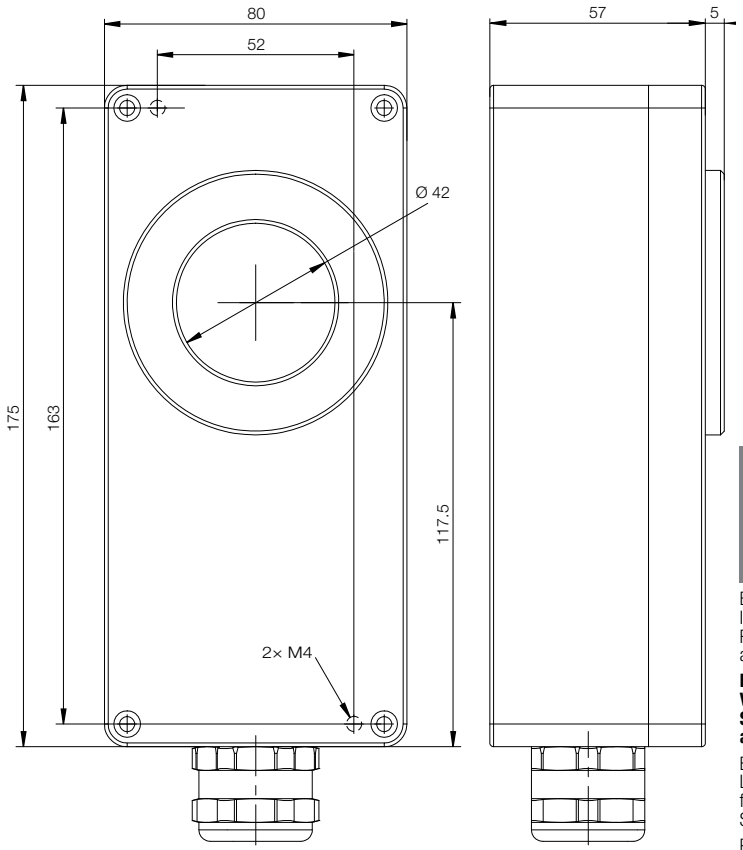

BIS Industrial RFID accessories
BVS Vision Sensors accessories
BAE Lights for Vision Sensors
Power supplies

Accessories – A Selection
BAE Lights for Vision Sensors

Lights used in an industrial environment depend on maximum reliability, outstanding quality and a good price/performance ratio. Balluff offers different versions of light to suit your needs. Select the best solution for your task and profit from our mature technology.

We offer different versions:
- Background lights
- Ring lights
- Line lights
- Spotlights
- Coaxial lights
- Dark field illumination
- Line Laser

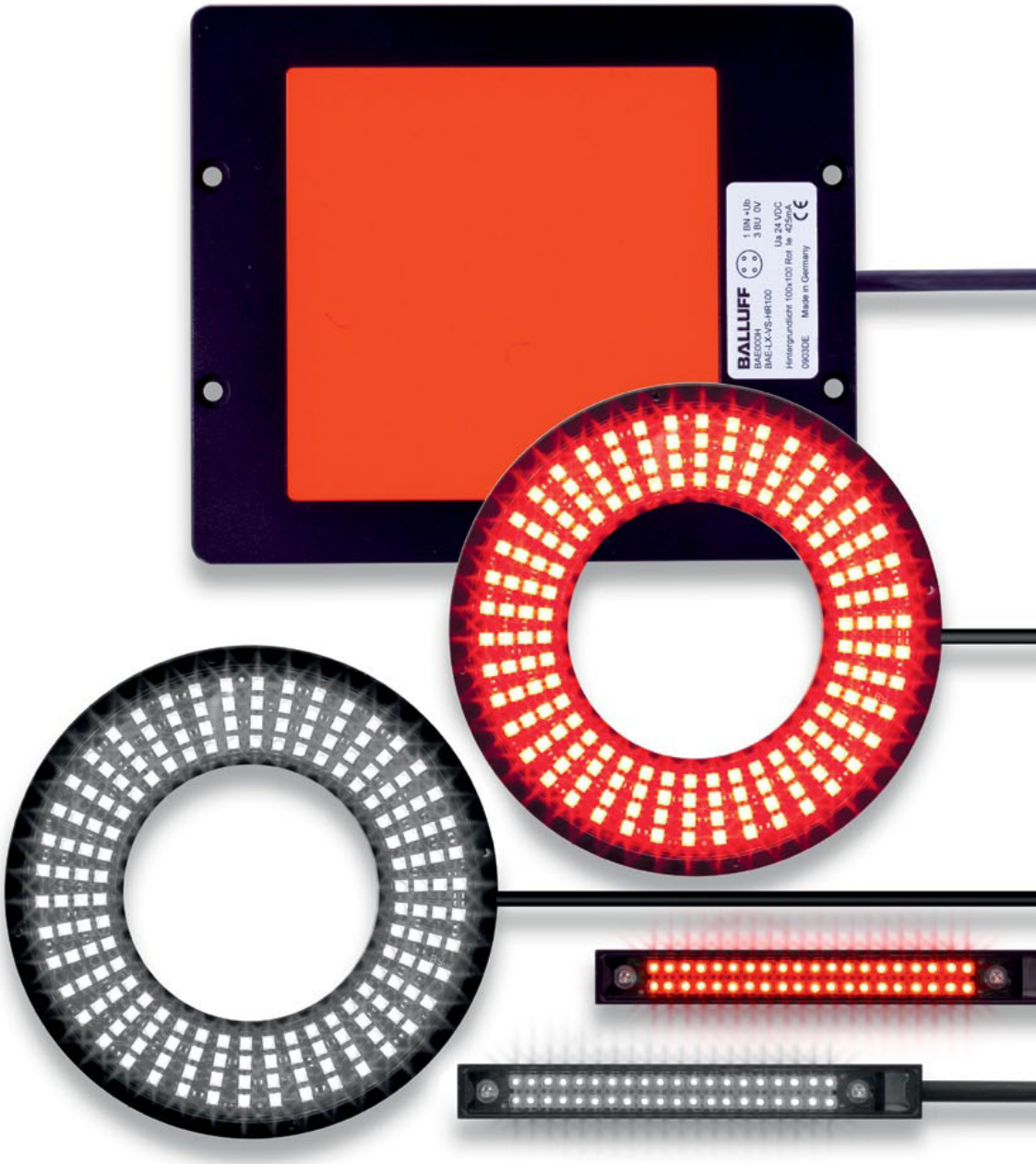

Product overview
Balluff offers a wide range of additional lights because each image processing task depends entirely on the illumination. Only perfect light can provide ideal conditions for your inspection.

Background lights
- Simple monitoring of dimensions and shapes
- Independent of material and surface type
- Various light field sizes available

Page 336

Ring lights
- Compatible mounting bracket for sensor and light
- Shadow free illumination with a high degree of brightness
- For inspections with a large working distance

Page 340

Line lights
- Homogeneous, directed light
- Generate shadows to check features
- Available with red, infrared and white light

Page 342

The benefits to you

Highest quality
Our wide range of lights is subject to strict quality standards. For example, the function of all lights is tested for 24 hours prior to delivery. Our lights are protected against damages from burst pulses on the connection cable or electrostatic discharge (ESD). EMC tests performed by an accredited test laboratory have proven this.

Eye safety per IEC 62471
Strong artificial radiation as from LEDs, for example, can affect your vision. Our lights are therefore tested by an independent, certified test laboratory according to the latest applicable standard (IEC 62471). All of our lights are categorized into the „Extempt group“ or "Risk group 1" and are therefore considered extremely safe. By comparison: the sun falls into risk group 3.

Fast, simple mounting
All lights are quick, easy and economical to mount and align with the Balluff Mounting System BMS.

Long service life
We use only extremely luminous LEDs of the highest quality to manufacture our lights. Our extremely luminous ring and line lights are equipped with an excess temperature deactivation mechanism to extend the useful life of an LED, which depends primarily on the temperature load.

Simple startup
You only need a conventional 24 V power supply to connect our lights. Expensive control units are not required. Our background and dark field lights are connected to a 24 V DC power supply. That‘s it. Ring and line lights are triggered directly by the Vision Sensor or a PLC.

Boost function
Ring and line lights have a boost function that increases light intensity by 30 % and reduces the influence of ambient light. Overall process reliability is increased as a result.

Frequently asked questions

What should the distance between the light and the component be? The light intensity on an object decreases with the working distance. Objects positioned further away appear darker than closer objects as a result, e. g. if a bright object is inspected once at a distance of 10 cm and once at 100 cm. The brightness of the object 10 cm is 100 times greater than at a distance of 100 cm. Select the best distances between the light source, sensor and target object. In order to prevent saturation, make sure that the brightness of the light source is correct.

How should reflective components be illuminated? When inspecting highly reflective surfaces, the sensor must be mounted with extreme care and if necessary an external light should be attached to a suitable bracket in order to maximum the contrast between the detected object and the background.

Keep the lighting of the part to be inspected constant. Avoid brightness fluctuations caused by ambient light, sunlight or other external light sources. These fluctuations are the most frequent cause of errors in image processing and are often difficult to identify. Errors can be limited by decreasing the exposure time of the sensor. External lighting may be required in addition to the light inside the sensor. Alternative solutions include covers or any kind of physical screen that specifically controls the light within the inspection area.

How should the field of view be illuminated? The entire image area should be illuminated as evenly as possible. Avoid extremely bright points or dark areas. The component features you wish to inspect should, however, contrast as much as possible and show up clearly on the background. If you wish to check whether a specific feature is present, you can illuminate the component so that a clear shadow is cast upon the feature you wish to detect. The Vision Sensor can then detect the feature.

Spotlights
- Accurate illumination
- Implement larger inspection distances
- Available with red and white light

Page 344

Coaxial lights
- Highly uniform lighting
- For highly reflective surfaces
- For inspections for prints or for Dot-Peen Codes

Page 346

Dark field illumination
- Monitors scratches and dents in surfaces
- Independent of material and surface type
- Various light field sizes available

Page 348

Line lasers
- Bright, zoomable line laser up to 2000 mm
- For height detection of parts with triangulation
- For completeness detection of parts

Page 349

BIS Industrial RFID accessories
BVS Vision Sensors accessories
BAE Lights for Vision Sensors
Power supplies

Background lights

Series	BAE LX-VS	BAE LX-VS
Style	**Background light**	**Background light**
Light type	Red light	Red light
Ordering code	**BAE000E**	**BAE000F**
Part number	BAE LX-VS-HR025	BAE LX-VS-HR050
Supply voltage U_B	24 V DC	24 V DC
Operating current	150 mA	250 mA
Trigger		Yes
Light field size	25×25 mm	50×50 mm
Emitter, light type	LED, red light	LED, red light
Wavelength	617 nm	617 nm
Dimension	64.5×43×9.5 mm	105×80×9.5 mm
Attachment	M4 screws	M4 screws
Connection	M12 connector, 4-pin	M12 connector, 4-pin
Housing material	Aluminum, anodized	Aluminum, anodized
Optical surface	Glass	Glass
Weight	66 g	155 g
Degree of protection per IEC 60529	IP 54	IP 54
Eye safety per IEC 62471	Exempt group	Exempt group
Polarity reversal protected/Short-circuit protected	Yes/Yes	Yes/Yes
Ambient temperature range T_a	–10...+55 °C	–10...+55 °C
Storage temperature range	–25...+75 °C	–25...+75 °C

Light accessories see page 311 for connectors, and page 328 for information on mounting brackets for direct assembly or compatible with Balluff BMS mounting system.

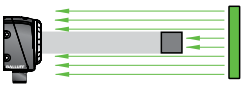

Background light: With the through beam method, the background lighting is positioned behind the object you wish to detect. The Vision Sensor only detects the outline of the object based on this position and allows you to monitor part dimensions or shapes extremely easily. Extraneous light also poses no problems. Changes in the surface (markings, color, etc.) can be suppressed almost completely and have no influence on the test result. Our background lights are particularly bright and versatile. You can also use them as subtle incident lights to illuminate highly reflective components. Due to the extremely flat design, they are ideal for use in applications with limited space.

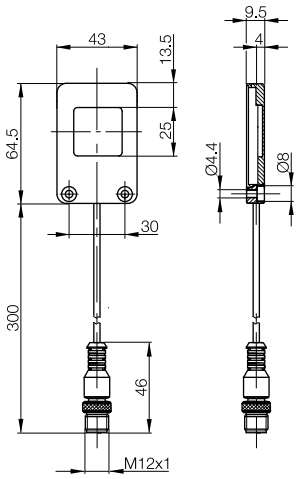

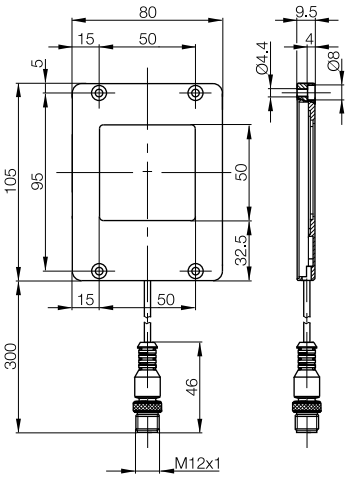

Background lights are suitable for the through beam method or subtle object illumination. The contours of the object appear sharper when these lights are used as background lights and allow you to make more accurate comparisons.

Background lights

BAE LX-VS	BAE LX-VS	BAE LX-VS
Background light	**Background light**	**Background light**
Infrared	Red light	Infrared
BAE00KR	**BAE000H**	**BAE00FR**
BAE LX-VS-HI050	BAE LX-VS-HR100	BAE LX-VS-HI100
24 V DC	24 V DC	24 V DC
350 mA	400 mA	625 mA
Yes	Yes	Yes
50×50 mm	100×100 mm	100×100 mm
LED, infrared	LED, red light	LED, infrared
875 nm	617 nm	875 nm
105×80×9.5 mm	155×130×9.5 mm	155×130×9.5 mm
M4 screws	M4 screws	M4 screws
M12 connector, 4-pin	M12 connector, 4-pin	M12 connector, 4-pin
Aluminum, anodized	Aluminum, anodized	Aluminum, anodized
Glass	Glass	Glass
155 g	345 g	345 g
IP 54	IP 54	IP 54
Risk group 1	Exempt group	Risk group 1
Yes/Yes	Yes/Yes	Yes/Yes
–10...+55 °C	–10...+55 °C	–10...+55 °C
–25...+75 °C	–25...+75 °C	–25...+75 °C

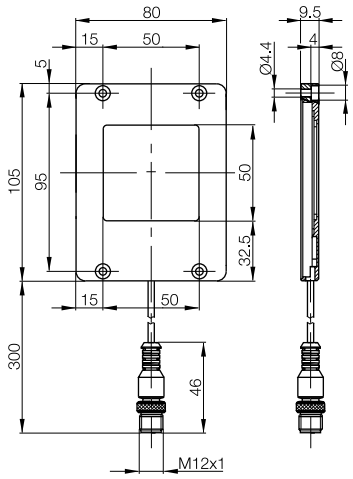

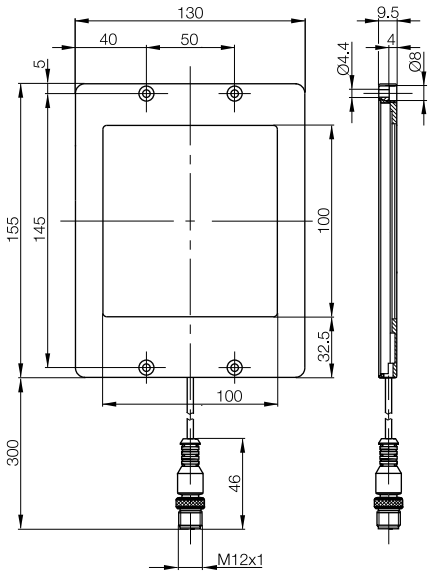

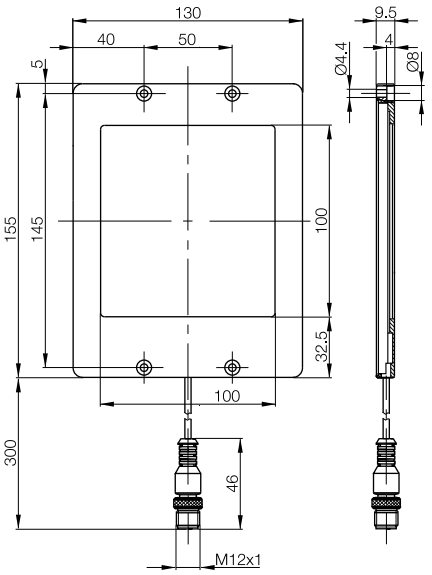

BIS
Industrial
RFID
accessories

BVS
Vision
Sensors
accessories

**BAE
Lights
for Vision
Sensors**

Power
supplies

Background lights

Series	BAE LX-VS	BAE LX-VS
Style	**Background light**	**Background light**
Light type	Red light	Infrared
Ordering code	**BAE00C5**	**BAE00KP**
Part number	BAE LX-VS-HR150	BAE LX-VS-HI150
Supply voltage U_B	24 V DC	24 V DC
Operating current	500 mA	800 mA
Trigger	Yes	Yes
Light field size	150×100 mm	150×100 mm
Emitter, light type	LED, red light	LED, infrared
Wavelength	617 nm	875 nm
Dimension	205×130×9.5 mm	205×130×9.5 mm
Attachment	M4 screws	M4 screws
Connection	M12 connector, 4-pin	M12 connector, 4-pin
Housing material	Aluminum, anodized	Aluminum, anodized
Optical surface	Glass	Glass
Weight	435 g	435 g
Degree of protection per IEC 60529	IP 54	IP 54
Eye safety per IEC 62471	Extempt group	Risk group 1
Polarity reversal protected/Short-circuit protected	Yes/Yes	Yes/Yes
Ambient temperature range T_a	–10...+55 °C	–10...+55 °C
Storage temperature range	–25...+75 °C	–25...+75 °C

Light accessories see page 311 for connectors, and page 328 for information on mounting brackets for direct assembly or compatible with Balluff BMS mounting system.

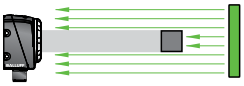

Background light: With the through beam method, the background lighting is positioned behind the object you wish to detect. The Vision Sensor only detects the outline of the object based on this position and allows you to monitor part dimensions or shapes extremely easily. Extraneous light also poses no problems. Changes in the surface (markings, color, etc.) can be suppressed almost completely and have no influence on the test result. Our background lights are particularly bright and versatile. You can also use them as subtle incident lights to illuminate highly reflective components. Due to the extremely flat design, they are ideal for use in applications with limited space.

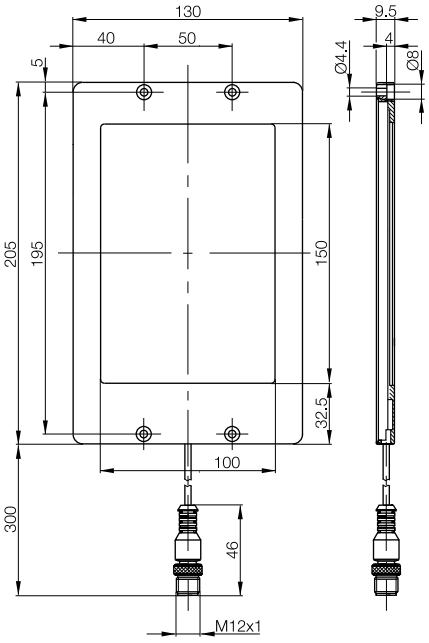

Accessories – A Selection

Background lights

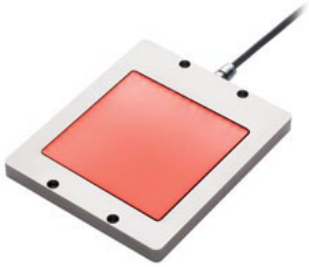

IP69K

BAE LX-VS	BAE LX-VS	BAE LX-VS
Background light	**Background light**	**Background light IP 69K**
Red light	Infrared	Red light
BAE00JC	**BAE00JE**	**BAE00JF**
BAE LX-VS-HR200	BAE LX-VS-HI200	BAE LX-VS-HR100-E
24 V DC	24 V DC	24 V DC
800 mA	625 mA	400 mA
Yes	Yes	Yes
200×150 mm	200×150 mm	100×100 mm
LED, red light	LED, infrared	LED, red light
617 nm	875 nm	617 nm
255×180×9.5 mm	255×180×9.5 mm	155×130×9.5 mm
M4 screws	M4 screws	M4 screws
M12 connector, 4-pin	M12 connector, 4-pin	M12 connector, 4-pin
Aluminum, anodized	Aluminum, anodized	Stainless steel
Glass	Glass	Glass
730 g	730 g	350 g
IP 54	IP 54	**IP 69K**
Extempt group	Risk group 1	Extempt group
Yes/Yes	Yes/Yes	Yes/Yes
–10...+55 °C	–10...+55 °C	–10...+55 °C
–25...+75 °C	–25...+75 °C	–25...+75 °C

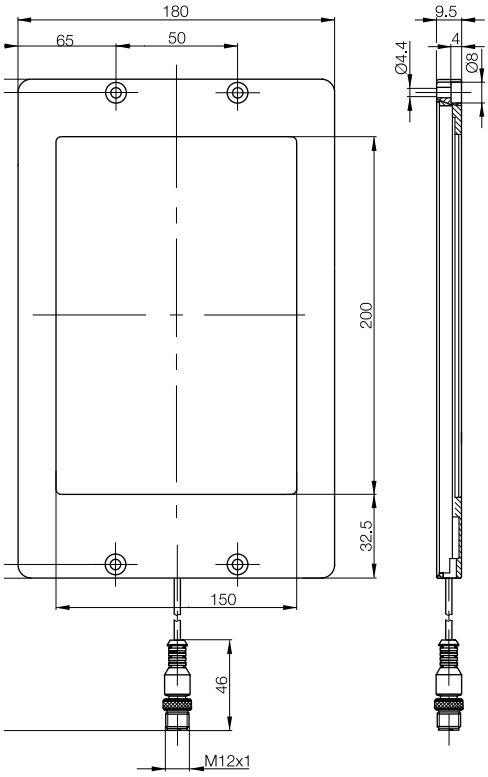

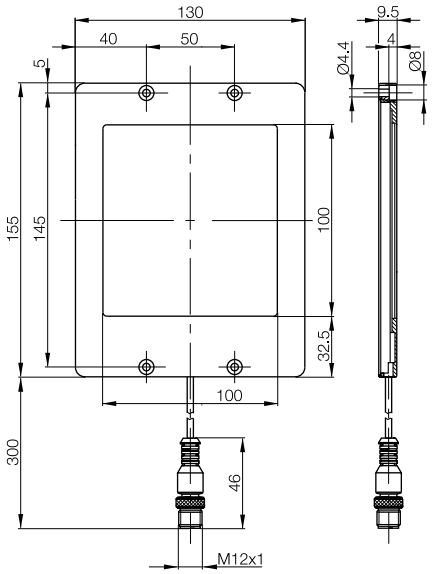

BIS Industrial RFID accessories

BVS Vision Sensors accessories

BAE Lights for Vision Sensors

Power supplies

Ring lights

Series		BAE LX-VS	BAE LX-VS
Style		**Ring light Standard**	**Ring light SlimLight**
Light type		Red light	Red light
Ordering code		**BAE000J**	**BAE00FP**
Part number		BAE LX-VS-RR100	BAE LX-VS-RR100-S
Supply voltage U_B		24 V DC	24 V DC
Operating current	Normal	800 mA	600 mA
	Boost	1300 mA	
Trigger		Yes	Yes
Mode	Normal	Yes	Yes
	Boost	Yes	
Light field size		Ø 100/60 mm	Ø 100/93 mm
Emitter		LED, red light	LED, red light
Wavelength		617 nm	617 nm
Dimension		Ø 116×20.5 mm	Ø 116×20.5 mm
Attachment		M4 screws	M4 screws
Connection		M12 connector, 4-pin	M12 connector, 4-pin
Housing material		Aluminum, anodized	Aluminum, anodized
Optical surface		Glass	Glass
Weight		360 g	345 g
Degree of protection per IEC 60529		IP 65	IP 54
Eye safety per IEC 62471	Normal	Exempt group	Exempt group
	Boost	Exempt group	
Polarity reversal protected/short-circuit protected		Yes/Yes	Yes/Yes
Ambient temperature range T_a		–10...+55 °C	–10...+55 °C
Storage temperature range		–25...+75 °C	–25...+75 °C

Light accessories see page 311 for connectors, and page 328 for information on mounting brackets for direct assembly or compatible with Balluff BMS mounting system.

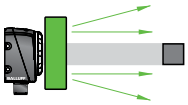

Ring lights: Ring lights are used as additional incident lights. The design of the light and powerful integral LEDs ensure virtually shadow free illumination with a high degree of intensity. Ring lights are particularly suited to applications where the distance between the BVS and the detected object is greater than 300 mm. Due to the high intensity of the light generated, these lights can also be used to suppress influences from changing ambient light. The ring light can be fitted and aligned together with the Vision Sensor using our mounting bracket specially adapted to the Balluff Mounting System. As an accessory, we offer diffuser attachments that prevent strong reflections on shiny components, for example.

The **diffuser attachment** ensures even light without disturbing reflections in applications with reflective surfaces. The diffuser is made of high-quality glass and can be installed directly on the light.

Description	Diffuser attachment
Version	for ring lights
Ordering code	**BAM01A7**
Part number	BAM OF-VS-001-D-RX100

Ring lights

SlimLine

SlimLine

BAE LX-VS	BAE LX-VS	BAE LX-VS	BAE LX-VS
Ring light Standard	**Ring light SlimLight**	**Ring light Standard**	**Ring light SlimLight**
Infrared	Infrared	White light	White light
BAE000K	**BAE00FN**	**BAE00AN**	**BAE00FM**
BAE LX-VS-RI100	BAE LX-VS-RI100-S	BAE LX-VS-RW100	BAE LX-VS-RW100-S
24 V DC	24 V DC	24 V DC	24 V DC
600 mA	500 mA	700 mA	450 mA
1300 mA		1200 mA	
Yes	Yes	Yes	Yes
Yes	Yes	Yes	Yes
Yes		Yes	
Ø 100/60 mm	Ø 100/93 mm	Ø 100/60 mm	Ø 100/93 mm
LED, infrared	LED, infrared	LED, white light	LED, white light
875 nm	875 nm		
Ø 116×20.5 mm	Ø 116×20.5 mm	Ø 116×20.5 mm	Ø 116×20.5 mm
M4 screws	M4 screws	M4 screws	M4 screws
M12 connector, 4-pin	M12 connector, 4-pin	M12 connector, 4-pin	M12 connector, 4-pin
Anodized aluminum	Aluminum, anodized	Anodized aluminum	Aluminum, anodized
Glass	Glass	Glass	Glass
360 g	345 g	360 g	345 g
IP 65	IP 54	IP 65	IP 54
Risk group 1	Risk group 1	Exempt group	Exempt group
Risk group 1		Exempt group	
Yes/Yes	Yes/Yes	Yes/Yes	Yes/Yes
–10...+55 °C	–10...+55 °C	–10...+55 °C	–10...+55 °C
–25...+75 °C	–25...+75 °C	–25...+75 °C	–25...+75 °C

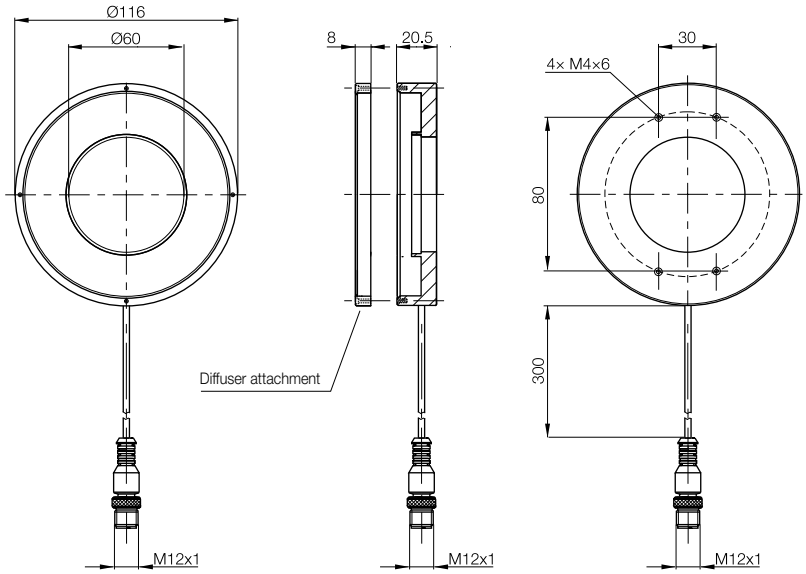

BIS Industrial RFID accessories
BVS Vision Sensors accessories
BAE Lights for Vision Sensors
Power supplies

Line lights

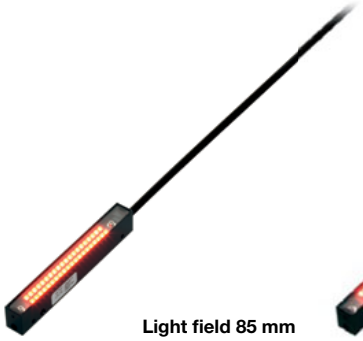

Light field 85 mm

Light field 170 mm

Series		BAE LX-VS	BAE LX-VS
Style		**Line light**	**Line light**
Light type		Red light	Red light
Ordering code		**BAE00AP**	**BAE00AZ**
Part number		BAE LX-VS-LR085	BAE LX-VS-LR170
Supply voltage U_B		24 V DC	24 V DC
Operating current	Normal	200 mA	375 mA
	Boost	375 mA	750 mA
Trigger		Yes	Yes
Mode	Normal	Yes	Yes
	Boost	Yes	Yes
Light field size		10×79 mm	10×170 mm
Emitter		LED, red light	LED, red light
Wavelength		617 nm	617 nm
Dimension		113.5×13×18 mm	197.5×13×18 mm
Attachment		M4 screws	M4 screws
Connection		M12 connector, 4-pin	M12 connector, 4-pin
Housing material		Anodized aluminum	Anodized aluminum
Optical surface		Glass	Glass
Weight		80 g	110 g
Degree of protection per IEC 60529		IP 54	IP 54
Eye safety per IEC 62471	Normal	Exempt group	Exempt group
	Boost	Exempt group	Exempt group
Polarity reversal protected/Short-circuit protected		Yes/Yes	Yes/Yes
Ambient temperature range T_a		–10...+55° C	–10...+55° C
Storage temperature range		–25...+75 °C	–25...+75 °C

Light accessories see page 311 for connectors, and page 328 for information on mounting brackets for direct assembly or compatible with Balluff BMS mounting system.

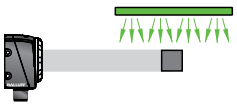

Line light: Line lights generate specific homogeneous lighting that brightens the image area directly. When used for lateral illumination, the light can generate subtle reflections and shadows. The subtle reflection generates an even illumination pattern without shiny areas. The shadows generated allow you to check the presence or absence of features on the object more easily.

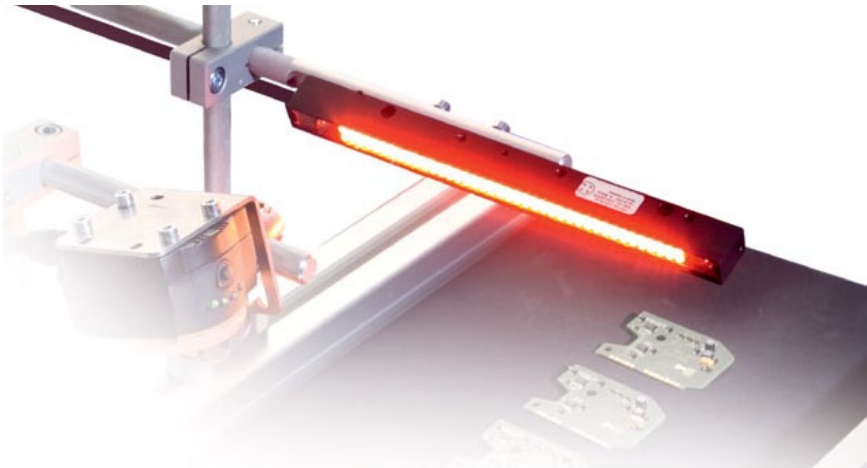

The line lights can illuminate rectangular areas right up to the corners. Shadows can also be generated in grooves and along edges and then used for evaluation purposes.

Accessories – A Selection

Line lights

Light field 85 mm

Light field 170 mm

Light field 85 mm

Light field 170 mm

BAE LX-VS	BAE LX-VS	BAE LX-VS	BAE LX-VS
Line light	**Line light**	**Line light**	**Line light**
Infrared	Infrared	White light	White light
BAE00AT	**BAE00AY**	**BAE00AR**	**BAE00AW**
BAE LX-VS-LI085	BAE LX-VS-LI170	BAE LX-VS-LW085	BAE LX-VS-LW170
24 V DC	24 V DC	24 V DC	24 V DC
200 mA	375 mA	200 mA	300 mA
375 mA	750 mA	375 mA	500 mA
Yes	Yes	Yes	Yes
Yes	Yes	Yes	Yes
Yes	Yes	Yes	Yes
10×71 mm	10×170 mm	10×83 mm	10×170 mm
LED, infrared	LED, infrared	LED, white light	LED, white light
875 nm	875 nm		
113.5×13×18 mm	197.5×13×18 mm	113.5×13×18 mm	197.5×13×18 mm
M4 screws	M4 screws	M4 screws	M4 screws
M12 connector, 4-pin	M12 connector, 4-pin	M12 connector, 4-pin	M12 connector, 4-pin
Anodized aluminum	Anodized aluminum	Anodized aluminum	Anodized aluminum
Glass	Glass	Glass	Glass
80 g	110 g	80 g	110 g
IP 54	IP 54	IP 54	IP 54
Exempt group	Exempt group	Exempt group	Exempt group
Risk group 1	Risk group 1	Exempt group	Exempt group
Yes/Yes	Yes/Yes	Yes/Yes	Yes/Yes
–10...+55° C	–10...+55° C	–10...+55° C	–10...+55° C
–25...+75 °C	–25...+75 °C	–25...+75 °C	–25...+75 °C

85 mm

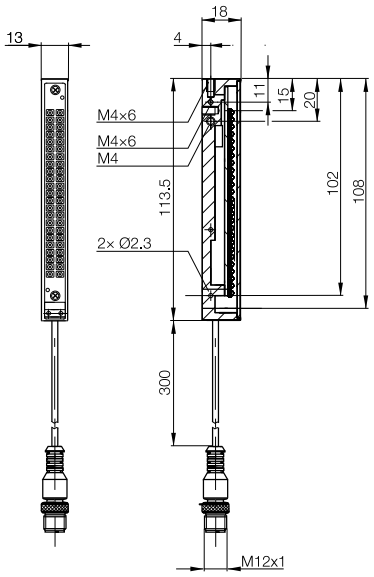

170 mm

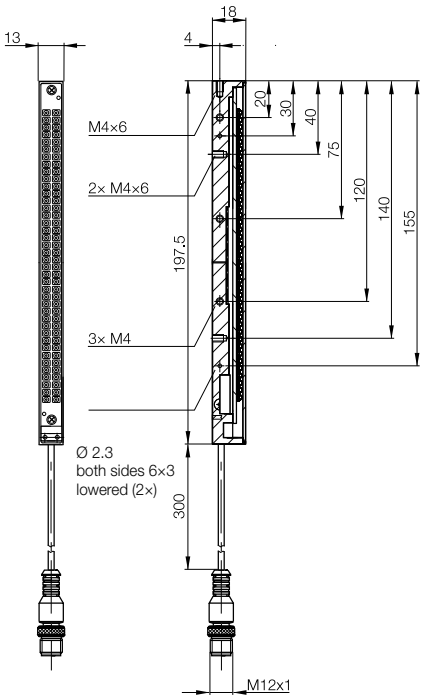

Series	BAE LX-VS	
Style	**Spotlight**	
Light type	Red light	
Ordering code	**BAE00KF**	
Part number	BAE LX-VS-SR012	
Supply voltage U_B	24 V DC	
Operating current	70 mA	
Trigger		
Light field size	Ø 12 mm	
Emitter, light type	LED, red light	
Wavelength	617 nm	
Dimension	M12×32.5 mm	
Attachment	M12×1 nut	
Connection	M12 connector, 4-pin	
Housing material	Stainless steel	
Weight	45 g	
Degree of protection per IEC 60529	IP 67	
Eye safety per IEC 62471	Exempt group	
Polarity reversal protected/short-circuit protected	Yes/Yes	
Ambient temperature range T_a	–10...+50 °C	
Storage temperature range	–10...+60 °C	

Light accessories see page 311 for connectors, and page 328 for information on mounting brackets for direct assembly or compatible with Balluff BMS mounting system.

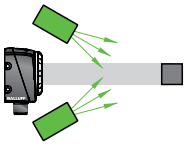

Spotlight: A spotlight is perfect for the precision illumination of specific areas. Greater inspection distances can be implemented if a spotlight is used. Unlike ring lights, spotlights can be attached in any position. You can swivel the light towards the area that you wish to illuminate.

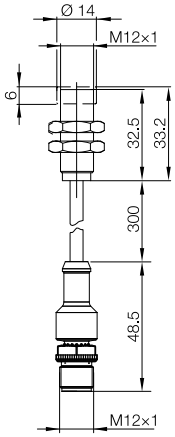

Spotlights

BAE LX-VS	BAE LX-VS	BAE LX-VS	BAE LX-VS
Spotlight	**Spotlight**	**Spotlight**	**Spotlight**
Red light	Infrared	Red light	Infrared
BAE00H0	**BAE00H1**	**BAE00FT**	**BAE00H2**
BAE LX-VS-SR018	BAE LX-VS-SI018	BAE LX-VS-SR030	BAE LX-VS-SI030
24 V DC	24 V DC	24 V DC	24 V DC
85 mA	85 mA	120 mA	115 mA
Yes	Yes	Yes	Yes
Ø 18 mm	Ø 18 mm	Ø 30 mm	Ø 30 mm
LED, red light	LED, infrared	LED, red light	LED, infrared
617 nm	850 nm	617 nm	850 nm
M18×72 mm	M18×72 mm	M30×62 mm	M30×62 mm
M18×1 nut	M18×1 nut	M30×1.5 nut	M30×1.5 nut
M12 connector, 4-pin	M12 connector, 4-pin	M12 connector, 4-pin	M12 connector, 4-pin
Stainless steel	Stainless steel	Stainless steel	Stainless steel
75 g	75 g	90 g	90 g
IP 67	IP 67	IP 67	IP 67
Exempt group	Risk group 1	Exempt group	Risk group 1
Yes/Yes	Yes/Yes	Yes/Yes	Yes/Yes
0...+50 °C	0...+50 °C	0...+50 °C	0...+50 °C
–10...+60 °C	–10...+60 °C	–10...+60 °C	–10...+60 °C

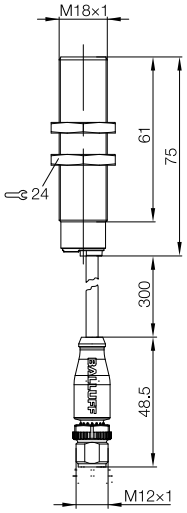

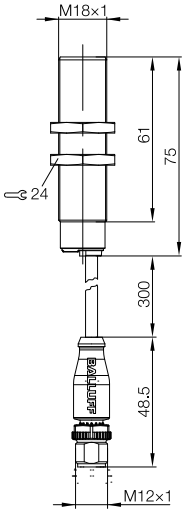

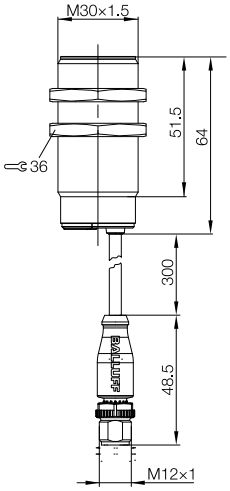

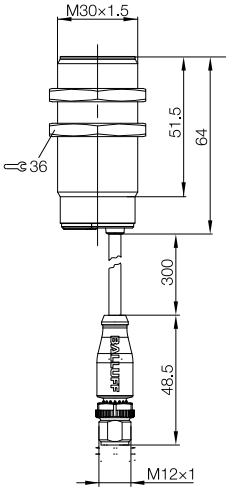

BIS Industrial RFID accessories
BVS Vision Sensors accessories
BAE Lights for Vision Sensors
Power supplies

Coaxial lights

- Long service life
- Uniform lighting
- High standard of quality
- Energy-saving LED technology

Coaxial lighting is the optimal solution for lighting highly reflective surfaces. Therefore, coaxial lighting is well suited for transmitted light inspections of colored materials and for inspections of printed or dirty surfaces. It is low maintenance, industrially sound and thus can be integrated with low effort.

Coaxial lights

Series	BAE LX-VS	BAE LX-VS
Style	**Coaxial light**	**Coaxial light**
Light type	Red light	Red light
Ordering code	**BAE00J9**	**BAE00JA**
Part number	BAE LX-VS-OR50	BAE LX-VS-OR100
Supply voltage U_B	24 V DC	24 V DC
Operating current	218 mA	600 mA
Light field size	50×50 mm	100×100 mm
Emitter, light type	LED, red light	LED, red light
Wavelength	630 nm	630 nm
Dimension	106×67×57 mm	150×108×110 mm
Attachment	M4 screws	M4 screws
Connection	M8 connector, 2-pin	M8 connector, 2-pin
Housing material	Anodized aluminum	Anodized aluminum
Optical surface	Glass	Glass
Weight	450 g	1500 g
Degree of protection per IEC 60529	IP 54	IP 54
Eye safety per IEC 62471	Exempt group	Exempt group
Polarity reversal protected/short-circuit protected	Yes/Yes	Yes/Yes
Ambient temperature range T_a	–10…+55 °C	–10…+55 °C
Storage temperature	–25…+75 °C	–25…+75 °C

Light accessories see page 311 for connectors, and page 328 for information on mounting brackets for direct assembly or compatible with Balluff BMS mounting system.

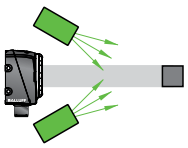

Coaxial lighting is used if the industrial image processing system requires diffused light to, for example, uniformly illuminate highly reflective surfaces and prevent reflection.

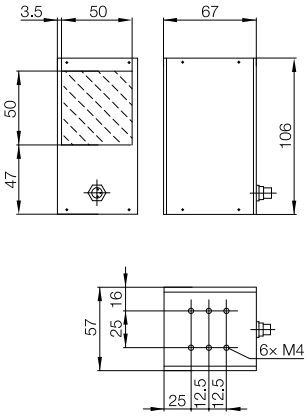

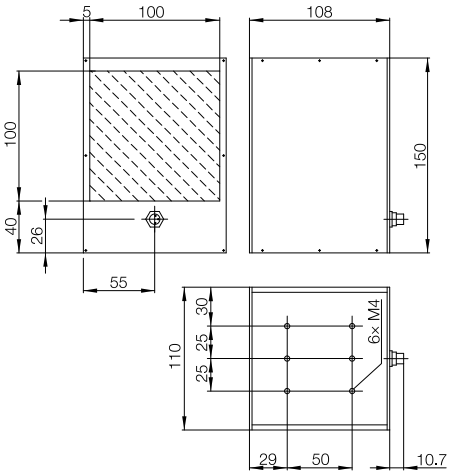

BIS Industrial RFID accessories
BVS Vision Sensors accessories
BAE Lights for Vision Sensors
Power supplies

Accessories – A Selection

Dark field illumination

Series	BAE LX-VS
Style	**Dark field illumination**
Light type	Red light
Ordering code	**BAE00AM**
Part number	BAE LX-VS-DR090
Supply voltage U_B	24 V DC
Operating current	425 mA
Trigger	Yes
Light field size	Ø 90 mm
Emitter, light type	LED, red light
Wavelength	617 nm
Dimension	105×80×9.5 mm
Attachment	M4 screws
Connection	M12 connector, 4-pin
Housing material	Anodized aluminum
Optical surface	PMMA
Weight	250 g
Degree of protection per IEC 60529	IP 54
Eye safety per IEC 62471	Exempt group
Polarity reversal protected/short-circuit protected	Yes/Yes
Ambient temperature range T_a	–10...+55 °C
Storage temperature range	–25...+75 °C

Light accessories see page 311 for connectors, and page 328 for information on mounting brackets for direct assembly or compatible with Balluff BMS mounting system.

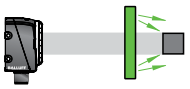

Dark field illumination: The dark field light allows you to illuminate and identify scratches, dents and impurities on surfaces extremely well. The dark field light must be attached to the detection object at a distance of 10…20 mm so that the surfaces on the component can be inspected. If the diameter of the dark field is insufficient, two or more line lights can also be installed to implement this type of illumination.

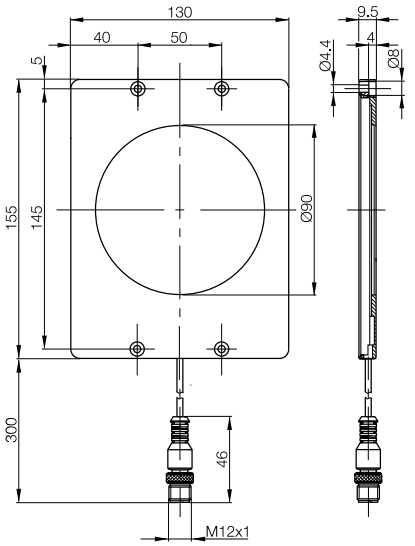

The dark field light allows you to illuminate surfaces in order to clearly reveal indentations or scratches, so that they can be inspected quickly and reliably.

Line Laser

Series		BAE LX-XO	BAE LX-XO
Style		**Line laser**	**Line laser**
Light Type		Red light	Red light
Ordering code		**BAE00KE**	**BAE00KZ**
Part number		BAE LX-XO-PL018-L1-S4	BAE LX-XO-PL018-L2-S4
Supply voltage U_B		5...30 V DC	5...30 V DC
Operating current		30 mA	30 mA
Trigger		Yes	Yes
Light field size	distance 100 mm	73 µm/82 mm	77 µm/30 mm
	distance 500 mm	170 µm/420 mm	107 µm/60mm
	distance 1000 mm	320 µm/840 mm	189 µm/300 mm
	distance 2000 mm	677 µm/1650 mm	360 µm/600 mm
Emitter, light type		Laser, red light	Laser, red light
Wavelength		640 nm	635 nm
Dimension		Ø 20×128 mm	Ø 20×108 mm
Connection		M12 connector, 4-pin	M12 connector, 4-pin
Housing material		Brass, coated and aluminum, anodized	Brass, coated and aluminum, anodized
Optical surface		Glass	Glass
Weight		66 g	56 g
Degree of protection per IEC 60529		IP 67	IP 67
Laser class üer IEC 60825-1		2M	1M
Polarity reversal/short-circuit protected		Yes/Yes	Yes/Yes
Ambient temperature T_a		–10…+50 °C	–10…+50 °C
Storage temperature		–10…+80 °C	–10…+80 °C

Light accessories see page 311 for connectors, and page 328 for information on mounting brackets for direct assembly or compatible with Balluff BMS mounting system.

Caution
Do not observe laser radiation directly with optical instruments (magnifiers, microscopes, etc.) Laser class 1M and 2M (DIN EN 60825-1: 2008)

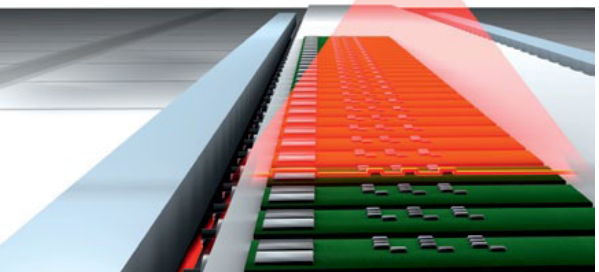

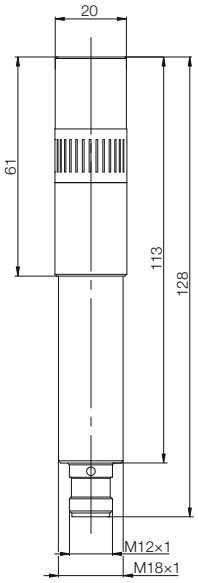

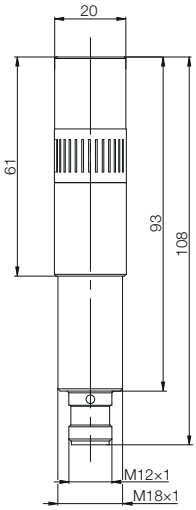

Exceptional uniformity, focusable and a high standard of quality
Line lasers are used in industrial image processing and for aligning and positioning workpieces or accessories. The combination of laser lighting and image processing provides interesting options for automating visual quality control. They are used in many ways for detecting and measuring defects, presence, diameters, edges, gaps, steps, etc. Our line lasers with uniform output distribution can be focused precisely without a tool and securely adjusted using a locking device. The line position stays unchanged.

Accessories – A Selection
Standard power supplies

Every industrial automation system needs a reliable, clean, and controlled source of power without spikes.
Only then can these systems deliver the expected performance. With the new Balluff power supplies you get what you expect and more. They ensure reliable power even under demanding conditions. They fall in line with the long Balluff tradition of reliable and high-quality performance products for industrial automation. But that's not all. Balluff power supplies are one of many products from a comprehensive, professional system.

- **Ultra-reliable power supplies**
  for protecting sensitive control electronics
- **Protection against unforeseen events**
  Integrated overload and overvoltage protection
- **Wide selection of models**
  Whether stand-alone or an individual combination of various models, these solutions are perfect for your requirements
- **Clean, precision power supply for particularly**
  complex systems
  Load regulation ±1 % for all models, ripple & noise for most models less than 50 mV
- **Long service life for less system downtime**
  MTBF (Mean Time Between Failure) up to 800,000 hours/91 years

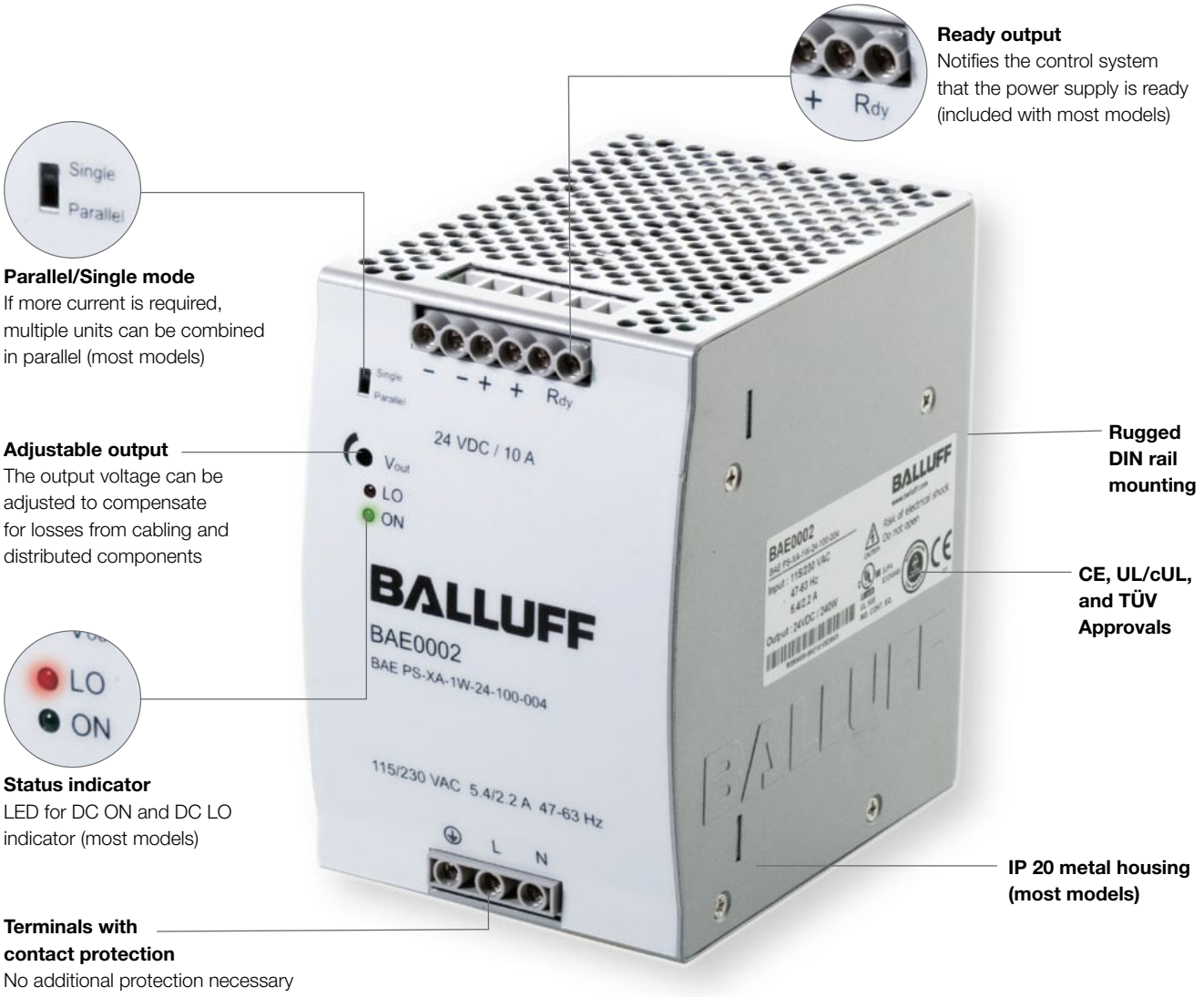

Ready output
Notifies the control system that the power supply is ready (included with most models)

Parallel/Single mode
If more current is required, multiple units can be combined in parallel (most models)

Adjustable output
The output voltage can be adjusted to compensate for losses from cabling and distributed components

Status indicator
LED for DC ON and DC LO indicator (most models)

Terminals with contact protection
No additional protection necessary

Rugged DIN rail mounting

CE, UL/cUL, and TÜV Approvals

IP 20 metal housing (most models)

Standard power supplies

Version	Output voltage	Output power: 0.75 A/18 W	1.25 A/30 W	1.5 A/18 W	2.5 A/30 W	2.5 A/60 W	2.5 A/120 W	3.8 A/91.20 W	5 A/60 W	5 A/120 W	5 A/240 W	10 A/120 W	10 A/240 W	10 A/480 W	20 A/480 W	40 A/960 W	Features: Input voltage	Housing material	Parallel mode	Ready output	Product information: **Ordering code**	Part number
Standard IP 20	**12 V**			■													Single-phase[1]	Plastic			**BAE0036**	BAE PS-XA-1W-12-015-001
					■												Single-phase[1]	Plastic		■	**BAE0039**	BAE PS-XA-1W-12-025-002
									■								Single-phase[1]	Metal		■	**BAE003E**	BAE PS-XA-1W-12-050-002
												■					Single-phase[2]	Metal	■	■	**BAE003H**	BAE PS-XA-1W-12-100-003
	24 V	■															Single-phase[1]	Plastic			**BAE0001**	BAE PS-XA-1W-24-007-001
			■														Single-phase[1]	Plastic		■	**BAE0004**	BAE PS-XA-1W-24-012-002
						■											Single-phase[1]	Plastic		■	**BAE0005**	BAE PS-XA-1W-24-025-002
								■									Single-phase[2]	Metal	■	■	**BAE003J**	BAE PS-XA-1W-24-038-003
										■							Single-phase[2]	Metal	■	■	**BAE0006**	BAE PS-XA-1W-24-050-003
													■				Single-phase[2]	Metal	■	■	**BAE0002**	BAE PS-XA-1W-24-100-004
															■		Single-phase[2]	Metal	■	■	**BAE0003**	BAE PS-XA-1W-24-200-005
										■							3-phase[3]	Metal		■	**BAE0007**	BAE PS-XA-3Y-24-050-009
													■				3-phase[3]	Metal	■	■	**BAE0008**	BAE PS-XA-3Y-24-100-006
															■		3-phase[3]	Metal	■	■	**BAE0009**	BAE PS-XA-3Y-24-200-007
																■	3-phase[3]	Metal	■	■	**BAE003R**	BAE PS-XA-3Y-24-400-010
	48 V						■										Single-phase[2]	Plastic	■	■	**BAE003K**	BAE PS-XA-1W-48-025-003
											■						Single-phase[2]	Metal	■	■	**BAE003L**	BAE PS-XA-1W-48-050-004
														■			Single-phase[2]	Metal	■	■	**BAE003M**	BAE PS-XA-1W-48-100-005

[1] = 100...240 V AC
[2] = 115/230 V AC (Auto-Select)
[3] = 340...575 V AC

Control and Network Power
These power supplies were designed by Balluff with control products in mind, so you can be sure they will integrate perfectly with your control suite.

The PS Series of ultra reliable power supplies come in a wide range of 24 V DC models with single or 3-phase inputs. With current ranges from 0.75 A (18 W) to 40 A (960 W), there is a size for most applications. But if more power is needed, connect multiple power supplies together (parallel mode) for additive current capacity.

Seamless Installation
Reliable power has never been this easy to install. It starts with convenient DIN mounting with Balluff's heavy-duty, built-in mounting system. Screw terminals are oriented to allow AC power to enter from the bottom and DC power to exit from the top. Finger-safe terminals require no additional guarding.

BIS Industrial RFID accessories
BVS Vision Sensors accessories
BAE Lights for Vision Sensors
Power supplies

Intelligent power supplies

A Power Supply You Can Trust

Intelligent power supplies with HeartBeat technology give reliable feedback on the real time and long term status of the supply. Built with the roughest applications in mind, these power supplies provide many great advantages:

- Highly energy efficient (>93% efficiency)
- Electrically durable (power boost 150% for 4 seconds)
- Long lasting (minimum service life of 15 years)
- Vibration and shock resistant
- IP67 - Outside the cabinet rated

HEARTBEAT™

Load level
Reversible
in short term

Load level indicates the current load on the device. The display indicates the load without delay.

Stress level
Reversible
in medium term

Stress level indicates the physical and thermal loads. A change in the load status delays the “pulse” of the device slightly.

Lifetime
Irreversible
in long term

Lifetime indicates the remaining useful life of the device and is based on the combination of all loads.

Network Auxiliary Power
This fully potted power supply can be installed virtually anywhere in an industrial manufacturing environment and provide efficient and reliable power. Easy to see indicators communicate the status of the power supply for simple preventative maintenance plan. With greater than 93% efficiency you can improve plant performance and decrease waste power consumption.

Intelligent power supplies

Degree of protection as per IEC 60529			**IP 20**	**IP 67**
Output current			5 A and 10 A	3.8 A and 8 A
Output power			120 W and 240 W	91.2 W and 192 W
Output voltage			24 V DC (SELV)	24 V DC (SELV/PELV)
Input voltage			100...240 V AC Single phase	100...240 V AC Single phase
5 A/120 W	Isolated output	**Ordering code**	**BAE00EK**	
Single phase	(4-pin), SELV	Part number	BAE PS-XA-1W-24-050-013	
10 A/240 W	Isolated output	**Ordering code**	**BAE00EU**	
Single phase	(4-pin), SELV	Part number	BAE PS-XA-1W-24-100-014	
3.8 A/91.2 W	Isolated output	**Ordering code**		**BAE00EN**
Single phase	(4-pin), SELV	Part number		BAE PS-XA-1W-24-038-601
3.8 A/91.2 W	Grounded output	**Ordering code**		**BAE00EP**
Single phase	(4-pin), PELV	Part number		BAE PS-XA-1W-24-038-602
3.8 A/91.2 W	Isolated output	**Ordering code**		**BAE00ER**
Single phase	(5-pin), SELV	Part number		BAE PS-XA-1W-24-038-603
3.8 A/91.2 W	Isolated output	**Ordering code**		**BAE00FW**
Single phase	(4-pin), SELV	Part number		BAE PS-XA-1W-24-038-607
8 A/192 W	Isolated output	**Ordering code**		**BAE00ET**
Single phase	(4-pin), SELV	Part number		BAE PS-XA-1W-24-080-604
8 A/192 W	Isolated output	**Ordering code**		**BAE00FL**
Single phase	(5-pin), SELV	Part number		BAE PS-XA-1W-24-080-605
8 A/192 W	Grounded output	**Ordering code**		**BAE00FY**
Single phase	(4-pin), PELV	Part number		BAE PS-XA-1W-24-080-606
Efficiency			High efficiency, typically > 92 %	High efficiency, typically > 91 %
MTBF			> 800,000 h	> 800,000 h
Input			Screwed contact	7/8", 3-pin
Output			Screwed contact Potential-free alarm contacts for DC alarm and lifetime	7/8", 4-pin (socket) fitting for Ethernet/IP, DeviceNet 7/8", 5-pin (socket) fitting for CC-Link,Profinet, Profibus
Operating temperature			–25...+70 °C	–25...+70 °C
Storage temperature			–40...+80 °C	–40...+80 °C
Fasteners			DIN rail mounting	Panel, wall, and field mounting
Housing material			Metal, semi-potted	Metal, fully potted
Service life (at 80 % load and 40 °C)			15 years	15 years
Warranty			2 years	2 years

BIS Industrial RFID accessories
BVS Vision Sensors accessories
BAE Lights for Vision Sensors
Power supplies

Please find more detailed information in our Industrial Networking and Connectivity catalog or online.

IP 20

IP 67

Basic Information and Definitions

Technical Information and Definitions

Technical information and basic definitions for all BIS and BVS products can be found in this section. This includes recommendations for usage and ideal conditions for operation.

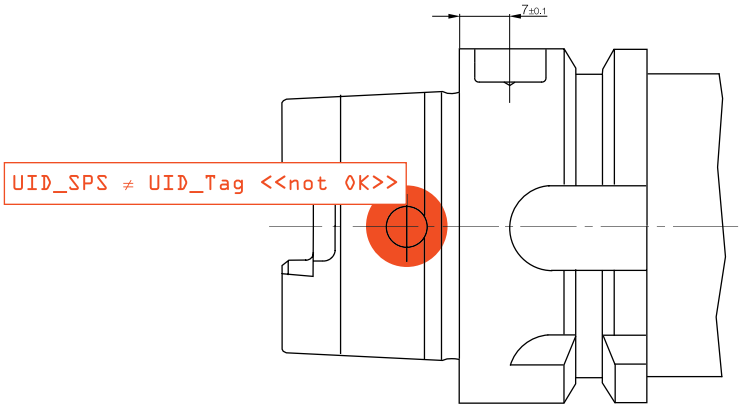

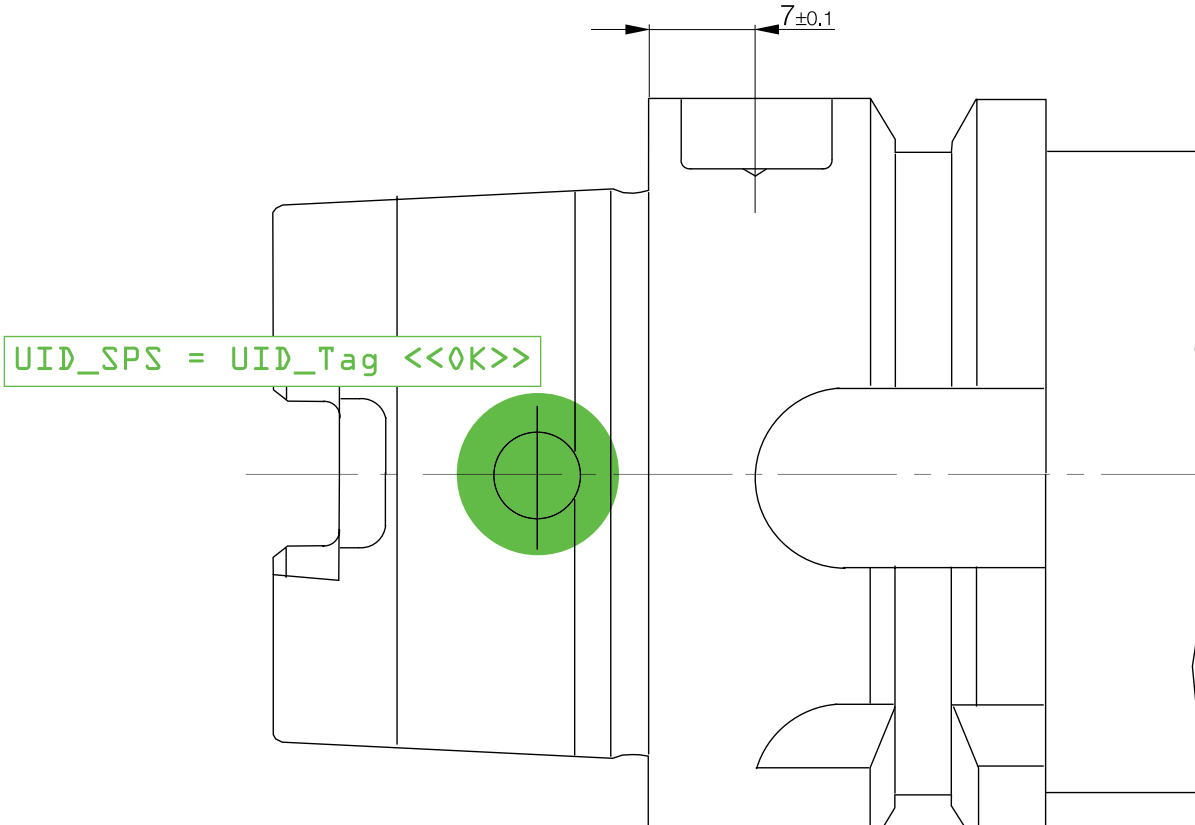

Contents

General information	356
Mechanical properties	358
Quality	359
Electro-magnetic identification	
BIS U Industrial RFID System	360
Inductive identification	
BIS M Industrial RFID System	364
BIS L Industrial RFID System	368
BIS C Industrial RFID System	372
BIS S Industrial RFID System	378
Interaction between read/write heads and data carriers	380
Vision-based identification	
BVS Vision Sensors	382

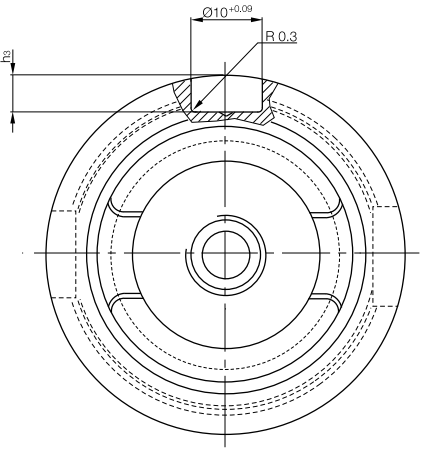

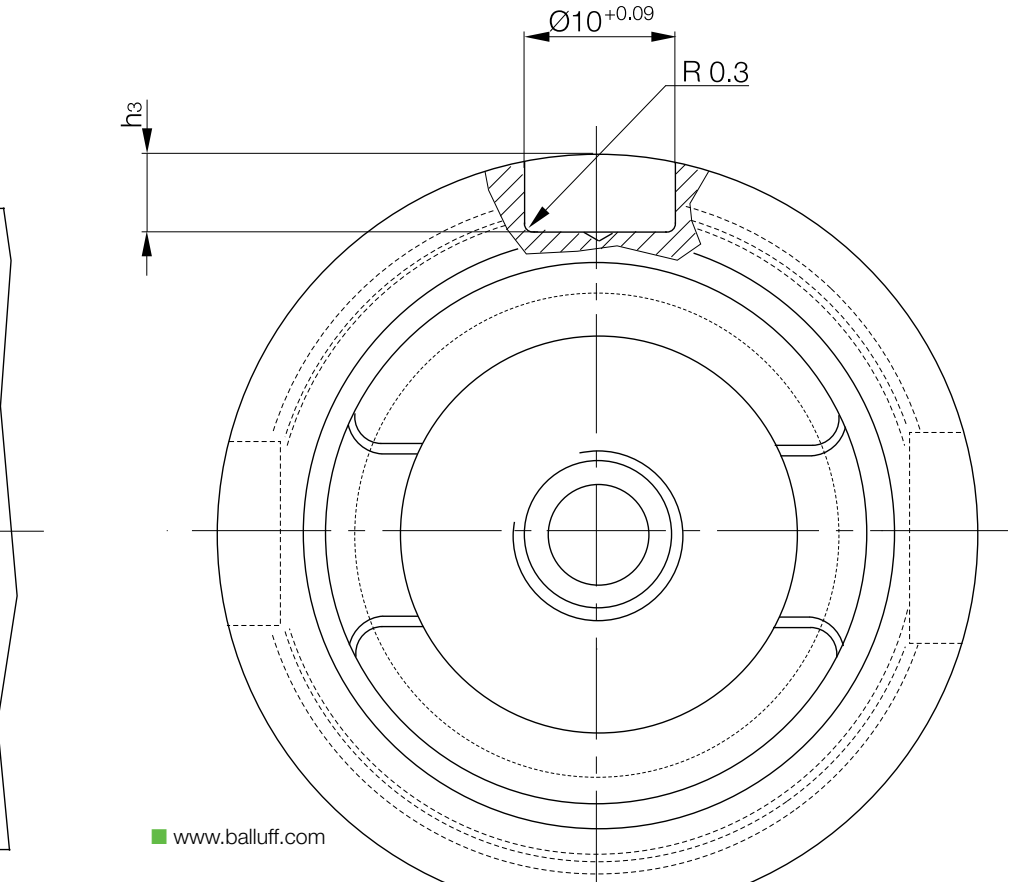

Standards

Protection class	II ⧈	EN 60947-5-2/IEC 60947-5-2

Degree of protection	IP 60...67	EN 60529/IEC 60529
	IP 68 per BWN Pr. 20	Balluff factory standard (BWN): Temperature storage 48 h at 60 °C, 8 temperature cycles according to EN 60068-2-14/IEC 60068-2-14 between the benchmark temperatures according to the data sheet, 1 h storage in water, insulation inspection, 24 h storage in water, insulation test, 8 temperature cycles according to EN 60068-2-14 IEC 60068-2-14 between the benchmark temperatures according to the data sheet, 7 days storage in water, insulation test.
	IP 68 per BWN Pr. 27	Balluff Factory Standard (BWN): Testing products for use in the foods industry.
	IP 69K	DIN 40050 part 9: Protection against entry of water under high pressure- or steam jet cleaning.

EMC (Electromagnetic Compatibility)	Emissions, RF noise voltage and RF noise radiation from electrical equipment	EN 55011
	Interference immunity against discharging static electricity (ESD)	EN 61000-4-2/IEC 61000-4-2
	Radio frequency immunity against high-frequency electromagnetic fields (RFI)	EN 61000-4-3/IEC 61000-4-3
	Immunity to fast transients (bursts)	EN 61000-4-4/IEC 61000-4-4
	Interference immunity against conducted interference, induced by high-frequency fields	EN 61000-4-6/IEC 61000-4-6
	Immunity to voltage dips and voltage interruptions	EN 61000-4-11/IEC 61000-4-11
	Surge-voltage stability	EN 60947-5-2/IEC 60947-5-2

Environmental simulation	Vibration, sinusoidal	EN 60068-2-6/IEC 60068-2-6
	Shock	EN 60068-2-27/IEC 60068-2-27
	Continuous shock	EN 60068-2-29/IEC 60068-2-29

Mounting torques

The following torques are to be followed so that the sensors are not mechanically destroyed during installation, as long as no other information is indicated on the data sheet or the sensor packaging.

Size	Material	Tightening torque
M12×1	Stainless steel	40 Nm
M18×1	PBT	1 Nm
M18×1	Stainless steel	60 Nm
M30×1.5	PBT	3 Nm
M30×1.5	Stainless steel	90 Nm

Degree of protection

The degrees of protection are given according to IEC 60529. Code letters IP (International Protection) designate protection for electrical equipment against shock hazard, ingress of solid foreign bodies and water.

First digit:

2 Protection against penetration of solid bodies larger than 12 mm, shielding from fingers and objects
4 Protection against penetration of solid bodies larger than 1 mm, shielding from tools and wires
5 Protection against damaging dust deposits, complete contact protection
6 Protection against penetration of dust, complete contact protection

Second digit:

0 No special protection
4 Protection against water, which is sprayed from all directions against the equipment
5 Protection against a stream of water from a nozzle which hits the equipment from all directions
7 Protection against water, if the equipment (housing) is temporarily submerged
8 Protection against water when submerged for some time

Electric properties
Mechanical properties
Quality
BIS U
BIS M
BIS L
BIS C
BIS S
Interaction between read/write heads and data carriers
BVS

Materials

Material	Use and characteristics
Plastics	
ABS Acrylonitrile-Butadiene-Styrene	Impact-resistant, stiff, limited chemical resistance. Some type flame-retardant. Used for housings.
ASA Acrylonitrile styrene acrylate	Impact-resistant material, scratch-resistant surface and good weather resistance.
EP Epoxy resin	Duromer, molded plastic material, highest mechanical strength and temperature resistance. Very good dimensional stability. Cannot be melted.
Epoxy resin – hollow glass spheres	Hollow glass spheres can be treated with epoxy resins. They are used for manufacturing converters with low thickness and high pressure rating.
PA Polyamide	High impact resistance, good chemical resistance.
PA 6, PA 66, PA mod., PA 12 Polyamide	Good mechanical strength. Temperature resistance. PA 12 approved for food industry applications.
PBT Polybutylene terephtalate	High mechanical strength and temperature resistance. Some types flame-retardant. Good chemical resistance. Good oil resistance
PC Polycarbonate	Clear, hard, elastic and impact resistant. Good temperature resistance. Limited chemical resistance.
PET Polyethylene terephtalate	High resistance to breakage, good dimensional stability. Frequently used in the food industry.
POM Polyoxymethylene	High impact resistance, good mechanical strength. Good chemical resistance.
PPS Polyphenylene sulfide	High strength, even at high temperatures. High chemical resistance.
PVC Polyvinyl chloride	Good mechanical strength and chemical resistance (cable).
PVDF Polyvinylidene fluoride	Thermoplastic. High mechanical strength and temperature resistance. Good chemical resistance (similar to PTFE).
Metal	
Wrought aluminum alloy	Standard-aluminum for machined cutting. Can be anodized. Used for housings and mounting components.
CuZn Brass	Standard-housing material with surface protection.
Stainless steel	Excellent corrosion resistance and strength. **Quality 1.4034, 1.4104:** Standard-material; **quality 1.4305, 1.4301:** Standard-material for the food industry; **quality 1.4401, 1.4404, 1.4571:** With increased requirements on chemical resistance at elevated temperatures for the food industry.
GD-Al die-cast aluminum	Low specific gravity. Good strength and resistance. Some types can be anodized.
GD-Zn die-cast zinc	Good resistance and strength. Usually with protective surface coating.
Other	
Glass	Good chemical resistance and strength. Used primarily in optical applications (lenses, cover lenses).

Quality and the environment

Quality management system per DIN EN ISO 9001:2008

Balluff companies	
Balluff GmbH	Germany
Balluff SIE Sensorik GmbH	Germany
Balluff Controles Elétricos Ltda.	Brazil
Balluff Sensors (Chengdu) Co., Ltd.	China
Balluff Ltd.	Great Britain
Balluff Automation S.R.L.	Italy
Balluff Canada Inc.	Canada
Balluff de México S.A. de C.V.	Mexico
Balluff GmbH	Austria
Balluff Sp. z o.o.	Poland
Balluff Hy-Tech AG	Switzerland
Balluff Sensortechnik AG	Switzerland
Balluff S.L.	Spain
Balluff CZ, s.r.o	Czech Republic
Balluff Elektronika Kft.	Hungary
Balluff Inc.	USA

Reg.Nr.: 19279-03

Environmental management system per DIN EN ISO 14001:2009

Balluff companies	
Balluff GmbH	Germany
Balluff Sensors (Chengdu) Co., Ltd.	China
Balluff Elektronika KFT	Hungary

Testing laboratory

The Balluff testing laboratory operates in accordance with ISO/IEC 17025 and is accredited by DAkks for testing electromagnetic compatibility (EMC).

DAkkS Deutsche Akkreditierungsstelle D-PL-12017-01-01

Balluff products comply with EU directives

Products that require labeling are subject to a conformity evaluation process according to the EU directive and the product is labeled with the CE marking.
Balluff products fall under the following EU directive:

2004/108/EC	EMC directive
2006/95/EC	Low Voltage Directive valid for products with supply voltage ≥ 75 V DC/≥ 50 V AC

Product approvals

Product approvals are awarded by domestic and international institutions. Their symbols affirm that our products meet the specifications of these institutions.

"US Safety System" and "Canadian Standards Association" under the auspices of Underwriters Laboratories Inc. (cUL).

c UL us LISTED

Electric properties
Mechanical properties
Quality
BIS U
BIS M
BIS L
BIS C
BIS S
Interaction between read/write heads and data carriers
BVS

BIS U configuration software

The BIS U uses a software configuration and parameterization package called “BIS UHF Manager”. Use this software to configure and parameterize the four channel processor and even read or write tag data.

Application software

Balluff partners with only best in class software providers and elite integrators to deliver the complete RFID solution. From a full system rollout to meshing into the current process, our software partners understand the needs of the manufacturing industry. Logistics, Work in process (WIP) production control, E-Kanban, asset tracking etc., are just a few of the applications in which our partners specialize.

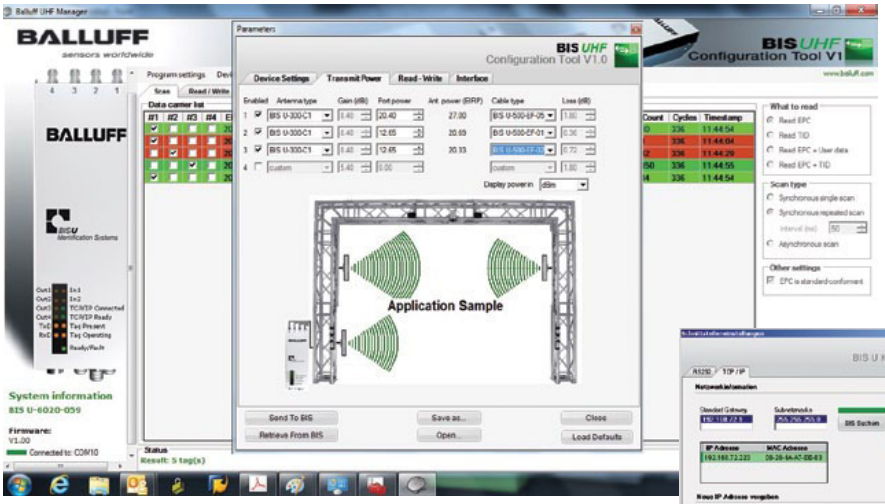

Setting the transmission power and dependency on the antenna being used

The BIS U-6027 processor and the controlling system communicate via Ethernet. Assigning a unique IP address associates the processor with a network.

BIS U service

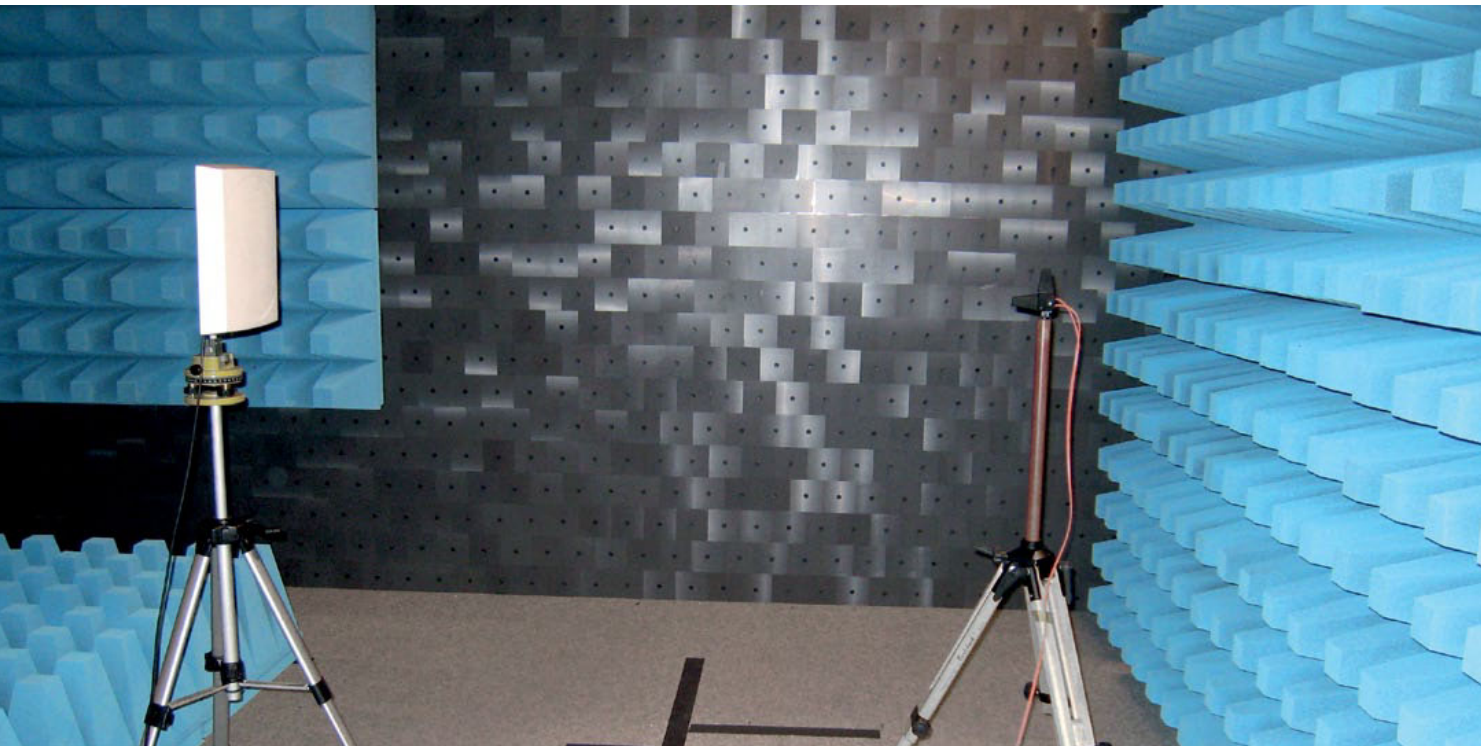

We assist you in finding a solution to your RFID task with short decision paths and personal contacts – from design to implementation using an onsite Site Survey. Using a Site Survey, the objectives and probability of success of your RFID identification task are objectively analyzed and the system design refined. The RFID system components are then selected. The solution design phase is concluded with a temporary test setup on-site on the system. You thereby receive valuable information for RFID use in your environment and are then able to perform a realistic ROI assessment.

Step 1: Preanalysis
Description of the installation conditions and physical characteristics:
- Mechanical installation
- Power limits
- Ambient parameters
- Detection type
- Transponder types
- Stationary/mobile read/write devices

Step 2: Feasibility
- Project description and definition of objectives
- Type and characteristics of the solution
- Where are the weak points
- Selection of system components

Step 3: Solution suggestion
- Preparation of samples and test settings
- Testing of RFID technology in the actual environment
- Performance comparison of various applications

Step 4: Project coaching
- Control of system integrators
- Support in all launch phases
- Project documentation and knowledge integration
- User training

We are happy to help!

1-800-543-8390
Give us a call.

Tecnical.Support@balluff.com
E-mail us.

Mounting definitions

	Flush in steel Active sensing surface can be flush mounted to surface of steel. Consult part data sheet for additional information.
	Non-flush on steel Active sensing surface must be clear and not be surrounded by steel. Consult part data sheet and clear zone definitions for more information.
	Non-metal Total clearance zone from any kind of metal must be maintained. Consult part data sheet and clear zone definitions for more information.

Consult technical support for other metal mounting options.

Electric properties
Mechanical properties
Quality
BIS U
BIS M
BIS L
BIS C
BIS S
Interaction between read/write heads and data carriers
BVS

BIS U antenna

Antenna
133 mm x 133.00 mm x 18.40 mm

Ordering code	**BIS00TY**
Part number	BIS U-301-C1-TNCB
Electrical data	
Antenna impedance	50 Ω
Antenna gain	5.5 dBi
Front-to-back ratio	> 8 dB
Radiation angle	vertical 100° horizontal 100°
Axial ratio	≤ 2 dB
Frequency range	US 902...928 MHz
Polarization	circular
Permissible radiated power	< 4 W EIRP
VSWR (standing wave ratio)	< 1.5:1

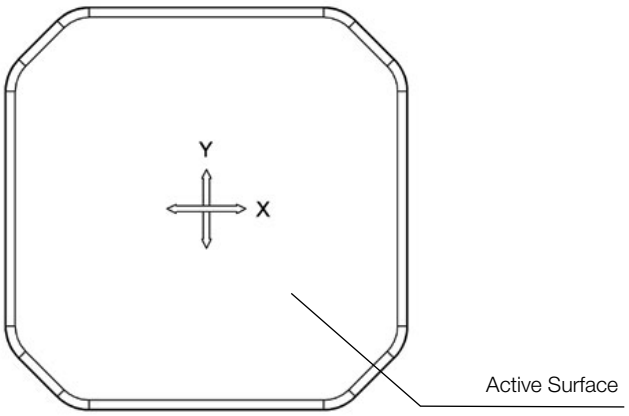

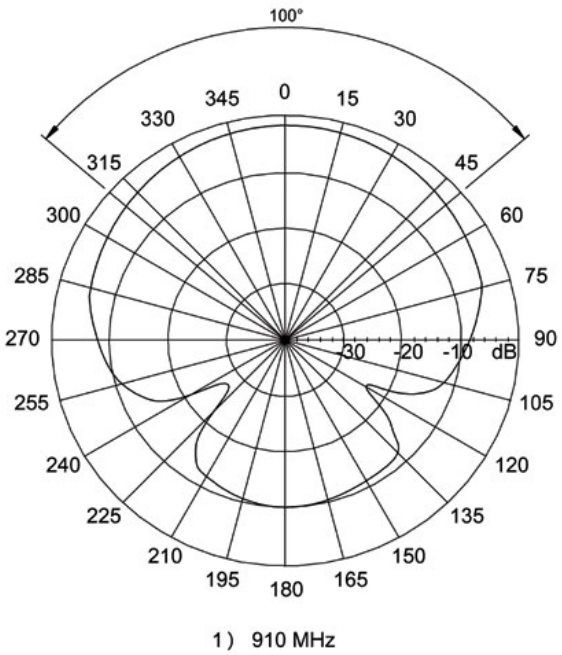

1) Radiation pattern X+Y

BIS U antenna

Antenna
271 mm x 271.00 mm x 42.50 mm

Ordering code	**BIS00U0**
Part number	BIS U-302-C1-TNCB
Electrical data	
Antenna impedance	50 Ω
Antenna gain	8.3 dBi
Front-to-back ratio	> 18 dB
Radiation angle	vertical 69° horizontal 69°
Axial ratio	typ. 1 dB
Frequency range	US 902...928 MHz
Polarization	circular
Permissible radiated power	< 4 W EIRP FCC CFR47 Part 15 Teil 15.247
VSWR (standing wave ratio)	< 1.2:1

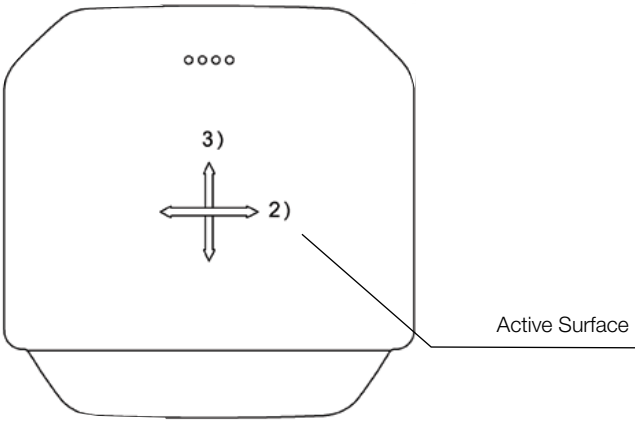

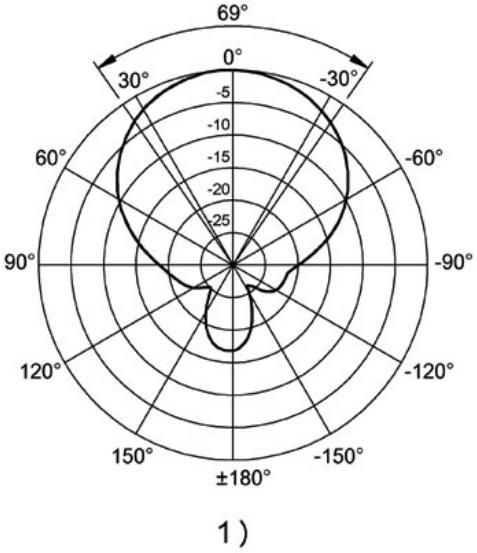

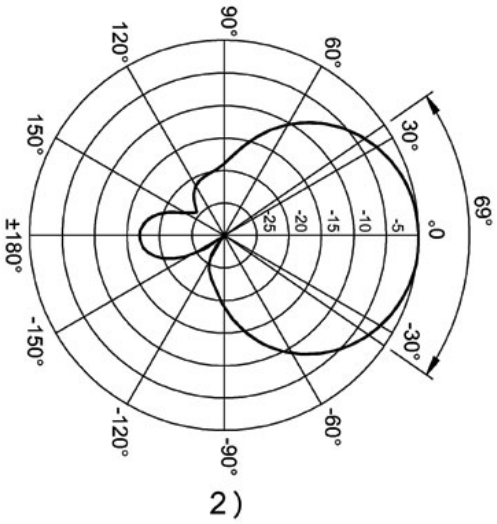

1) Radiation pattern horiz.
2) Radiation pattern vertical

Electric properties
Mechanical properties
Quality
BIS U
BIS M
BIS L
BIS C
BIS S
Interaction between read/write heads and data carriers
BVS

BIS M installation notes

Mounting definitions

Flush in steel
Active sensing surface can be flush mounted to surface of steel.
Consult part data sheet for additional information.

Non-flush on steel
Active sensing surface must be clear and not be surrounded by steel.
Consult part data sheet and clear zone definitions for more information.

Non-metal
Total clearance zone from any kind of metal must be maintained.
Consult part data sheet and clear zone definitions for more information.

Consult technical support for other metal mounting options.

Minimum distance between two data carriers

	BIS M-122-01/L, BIS M-122-02/L	BIS M-110-02/L	BIS M-101-01/A, BIS M-111-02/A	BIS M-102-01/L, BIS M-112-02/L	BIS M-105-01/A, BIS M-105-02/A	BIS M-108-02/A	BIS M-120-01/L	BIS M-151-02/A, BIS M-150-02/A
BIS M-300		> 100	> 100	> 150	> 100	> 100		
BIS M-301		> 200	> 200	> 200	> 100	> 200	> 250	
BIS M-302, BIS VM-307	> 100	> 100	> 100	> 100	> 100	> 100		
BIS M-304	> 100	> 100	> 100	> 100	> 100	> 100		
BIS M-400-007-001-00-S115		> 100	> 100	> 150	> 100	> 100		
BIS M-401-007-001-00-S115		> 200	> 200	> 200	> 100	> 200	> 250	
BIS M-400-007-002-00-S115	> 100	> 100	> 100	> 100	> 100	> 100		
BIS M-351, BIS VM-351								> 250
BIS M-451-007-001-00-S115								> 250

Dimensions in mm

Minimum distance between two read/write heads

BIS M-300	200
BIS M-301	600
BIS M-351/BIS VM-351	600
BIS M-302/BIS VM-307	100
BIS M-304	100
BIS M-400-007-001-00-S115	200
BIS M-401-007-001-00-S115	600
BIS M-451-007-001-00-S115	600
BIS M-400-007-002-00-S115	100
BIS M-410-007-002-00-S115	200
BIS M-411-007-002-00-S115	300

Dimensions in mm

Mounting the read/write heads on metal frames

If the read/write heads are mounted so that they are joined through an enclosed metal frame, mutual interference may result (conductor loop). This may reduce the read/write distances. The smaller the read/write head, the less the interference. This may result in a reduction of the maximum distance by 80 %. In such a case you should test the actual effective read distance.

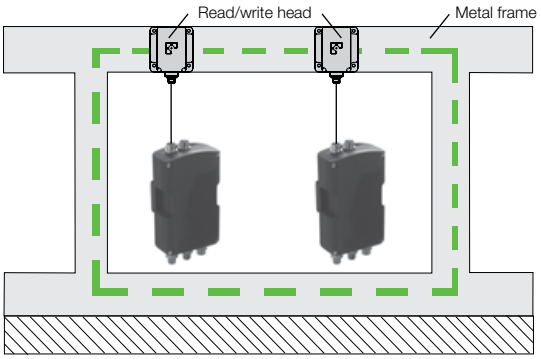

Clear zone dimensions for read/write heads

For compliance to the read/write distances as rated for a given data carrier to read/write head, the following Clear Zone Dimension must be used for a "non-metal" data carrier mounting:

Data carriers with clear zone dimensions	BIS M-111-02/L, BIS M-101-01/L		BIS M-112-02/L, BIS M-102-01/L		BIS M-105-02/A, BIS M-105-01/A		BIS M-120-01/L		BIS M-150-02/A, BIS M-151-02/A	
Read/write head	A	C	A	C	A	C	A	C	A	C
BIS M-300-001	100	30	150	30	100	20				
BIS M-301-001	200	70	200	70			250	70		
BIS M-302-001	60	30	60	30	60	30				
BIS M-351-001									250	70
BIS M-304-001	60	30	60	30	60	30				
BIS M-400-007-001	100	30	150	30	100	20				
BIS M-400-007-002	60	30	60	30	60	30				
BIS M-401-007-001	200	70	200	70			250	70		
BIS M-451-007-001									250	70

Dimensions in mm

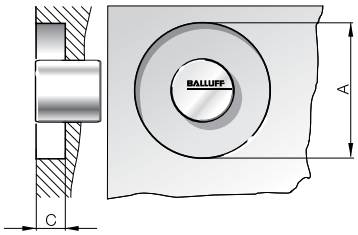

Mechanical strength

Data carriers and read/write heads BIS M-1_ _, BIS M-3_ _	
Shock load	100 g/6 ms per EN 60068-2-27 and 100 g/2 ms per EN 60068-2-29
Vibration	20 g, 10...2000 Hz per EN 60068-2-6

Processors BIS M-6_ _ _	
Shock load	15 g/11 ms per EN 60068-2-27 and 15 g/6 ms per EN 60068-2-29
Vibration	5 g, 10...150 Hz per EN 60068-2-6

Electric properties
Mechanical properties
Quality
BIS U
BIS M
BIS L
BIS C
BIS S
Interaction between read/write heads and data carriers
BVS

BIS M read/write times

Memory access

Our processors can read or write each individual byte in the data carrier. But since the data carrier is divided into 16-byte blocks, the actual reading and writing is done by blocks. Our processor electronics converts this time accordingly. To calculate the read/write times the block read or write time must however be used.

Data carrier recognition

20 ms are required to recognize a data carrier.

Read times BIS M-1_ _

EEPROM – Data carrier with 16 byte blocks		**FRAM** – Data carrier with 16 byte blocks	
Byte	read time	Byte	read time
from 0 to 15	20 ms	from 0 to 15	30 ms
for each additional 16 bytes started add an additional	10 ms	for each additional 16 bytes started add add an additional	15 ms

Write times BIS M-1_ _

EEPROM – Data carrier with 16 byte blocks		**FRAM** – Data carrier with 16 byte blocks	
Byte	write time	Byte	write time
from 0 to 15	40 ms	from 0 to 15	60 ms
for each additional 16 bytes started add an additional	30 ms	for each additional 16 bytes started add add an additional	40 ms

Example:

Read and write 183 bytes starting at address 42
Address 42 is in Block 3 (42/16)
Address 224 is in Block 14 (224/16)

Therefore a total of 12 blocks will be processed, where the first block always has a slightly longer read or write time.

Read time = 20 ms + 11 × 10 ms = 130 ms
Write time = 40 ms + 11 × 30 ms = 370 ms

Attention! Fluctuations in the ms range are possible.
Electrical noise effects may increase the read/write time.

BIS M read/write times

Read/write cycles

Data carriers	Memory type	Write cycles	Read cycles	Data retention time
112 bytes	EEPROM	100000	unlimited	10 years
160 bytes	EEPROM	100000	unlimited	10 years
736 bytes	EEPROM	100000	unlimited	10 years
752 bytes	EEPROM	100000	unlimited	10 years
992 bytes	EEPROM	100000	unlimited	10 years
2000 bytes	FRAM	unlimited	unlimited	10 years
8192 bytes	FRAM	unlimited	unlimited	10 years

Maximum speed

To calculate the permissible speed at which the data carrier and head may move relative to one another, the static distance values are used (see section BIS M).

The permissible speed is:

$$V_{max.\ perm.} = \frac{\text{Path}}{\text{Time}} = \frac{2 \times |\text{offset value}|}{\text{Processing time}}$$

The offset value is dependent on the read/write distance actually used in the system.

$$\text{Processing time} = \text{Data-carrier detection time} + \text{Read/write time of first block to be read} + n^1 \times \text{Read/write time for other started blocks}$$

n^1 = Number of started blocks

Electric properties
Mechanical properties
Quality
BIS U
BIS M
BIS L
BIS C
BIS S
Interaction between read/write heads and data carriers
BVS

BIS L installation notes

Mounting definitions

Flush in steel
Active sensing surface can be flush mounted to surface of steel.
Consult part data sheet for additional information.

Non-flush on steel
Active sensing surface must be clear and not be surrounded by steel.
Consult part data sheet and clear zone definitions for more information.

Non-metal
Total clearance zone from any kind of metal must be maintained.
Consult part data sheet and clear zone definitions for more information.

Consult technical support for other metal mounting options.

Minimum distance between two data carriers

	BIS L-100-01/L	BIS L-101-01/L	BIS L-102-01/L	BIS L-103-05/L	BIS L-200-03/L	BIS L-201-03/L	BIS L-202-03/L	BIS L-203-03/L
BIS L-300	250	300	400	250	250	300	400	250
BIS L-301	300	400	500	350	350	400	500	350
BIS L-302	150	200	200	180	180	200	250	180
BIS L-303	300	400	500	350	350	400	500	350
BIS L-304	150	200	200	180	180	200	250	180
BIS L-40_					≥ 250	≥ 300	≥ 400	

Dimensions in mm

Minimum distance between two read/write heads

BIS L-300	800 mm
BIS L-301	800 mm
BIS L-302	200 mm
BIS L-303	800 mm
BIS L-304	200 mm

Dimensions in mm

Distance from read head to read head

Read head	Distance X	Distance Y
BIS L-40 _-...-001-...	1000 mm	1000 mm
BIS L-40 _-...-002-...	500 mm	300 mm
BIS L-40 _-...-003-...	500 mm	300 mm
BIS L-40 _-...-004-...	500 mm	300 mm

Dimensions in mm

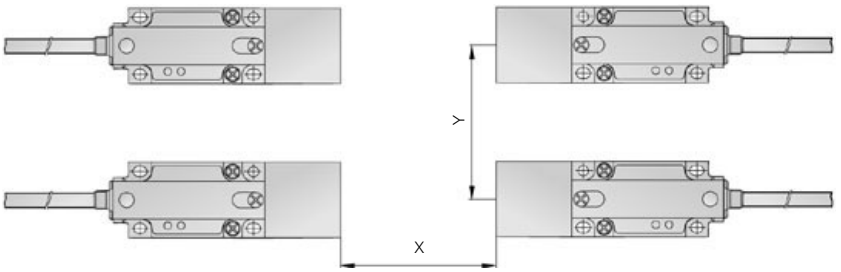

Mounting the read/write heads on metal frames

If the read/write heads are mounted so that they are joined through an enclosed metal frame, mutual interference may result (conductor loop). This may reduce the read/write distances. The smaller the read/write head, the less the interference. With the BIS L-301, the maximum distance can be reduced by up to 20 %. The distance should therefore be tested.

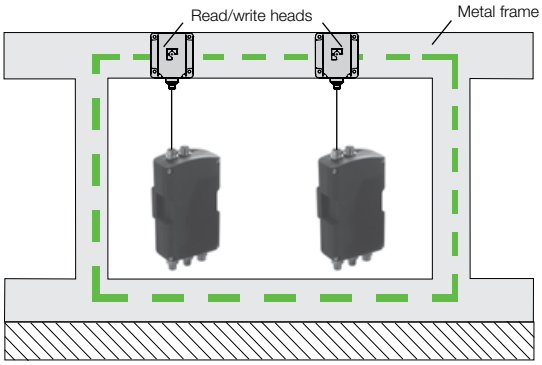

Installation in metal

For compliance to the read/write distances as rated for a given data carrier to read/write head, the following Clear Zone Dimension must be used for a "non-flush" or "non-metal" data carrier mounting.

Clear zone dimensions

Data carriers	Fig.	A	D	C	B
BIS L-100-01/L	1	100	50		
BIS L-101-01/L	1	100	50		
BIS L-102-01/L	1	100	50		
BIS L-103-05/L	1	100	50		
BIS L-150-05/A	3	0		3	0*
BIS L-200-03/L	1	100	50		
BIS L-201-03/L	1	100	50		
BIS L-202-03/L	1	100	50		
BIS L-203-03/L	1	100	50		

Read/write heads	Fig.	A	D	C	B
BIS L-300-_ _	2	100		50	
BIS L-301-_ _	1	240			0
BIS L-302-_ _	2	100		10	
BIS L-303-_ _	3	80	60	50	
BIS L-350-001-S4		50	50	30	
BIS L-304-_ _	3	50	50	10	
BIS L-400-_ _-001	2	100		40	
BIS L-400-_ _-002	2	100		10	
BIS L-400-_ _-003	2	100		10	
BIS L-400-_ _-004	3	50	50	10	
BIS L-405-_ _-001	2	100		40	
BIS L-405-_ _-002	2	100		10	
BIS L-405-_ _-003	2	100		10	
BIS L-405-_ _-004	3	50	50	10	

*in steel and BIS L-350 head

Dimensions in mm

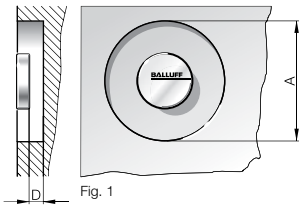

Fig. 1

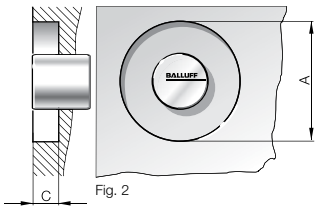

Fig. 2

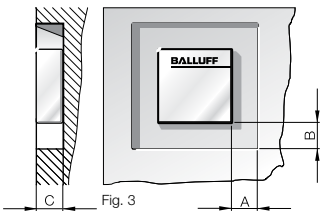

Fig. 3

Note! Depending on the combination of read/write head and data carrier, clear zone dimension A should always be selected for the larger of the components. If the clear zones cannot be maintained, the read/write distance will be reduced.

Electric properties
Mechanical properties
Quality
BIS U
BIS M
BIS L
BIS C
BIS S
Interaction between read/write heads and data carriers
BVS

Mechanical strength

Data carriers and read/write heads BIS L-1_ _, BIS L-2_ _, BIS L-3_ _, BIS L-4_ _	
Shock load	100 g/6 ms per EN 60068-2-27 and 100 g/2 ms per EN 60068-2-29
Vibration	20 g, 10...2000 Hz per EN 60068-2-6

Processors BIS L-6_ _ _	
Shock load	15 g/11 ms per EN 60068-2-27 and 15 g/6 ms per EN 60068-2-29
Vibration	5 g, 10...150 Hz per EN 60068-2-6

Maximum speed

To calculate the permissible speed at which the data carrier and head may move relative to one another, the static distance values are used (see section BIS L).

The permissible speed is:

$$V_{max.\ perm.} = \frac{\text{Path}}{\text{Time}} = \frac{2 \times |\text{offset value}|}{\text{Processing time}}$$

The offset value is dependent on the read/write distance actually used in the system.

$$\text{Processing time} = \text{Data-carrier detection time} + \text{Read/write time of first block to be read} + n^1 \times \text{Read/write time for other started blocks}$$

n^1 = Number of started blocks

BIS L read times

Read times BIS L-1_ _

Typically 110 ms for recognizing the serial number*

Data carrier with 4 byte blocks	
Byte	read time
from 0 to 3	180 ms
for each additional 4 bytes started add an additional	90 ms

Read times BIS L-2_ _

Serial number recognition = read data carrier = 100 ms*

Write times BIS L-1_ _

Data carrier with 4 byte blocks	
Byte	write time
from 0 to 3	305 ms
or each additional 4 bytes started add an additional	215 ms

*Applies only to parameter type and serial number output.

All specifications are typical values. Deviations are possible depending on the application and combination of read/write head and data carrier.

Electric properties
Mechanical properties
Quality
BIS U
BIS M
BIS L
BIS C
BIS S
Interaction between read/write heads and data carriers
BVS

BIS C installation notes

Mounting definitions

Flush in steel
Active sensing surface can be flush mounted to surface of steel.
Consult part data sheet for additional information.

Non-flush on steel
Active sensing surface must be clear and not be surrounded by steel.
Consult part data sheet and clear zone definitions for more information.

Non-metal
Total clearance zone from any kind of metal must be maintained.
Consult part data sheet and clear zone definitions for more information.

Consult technical support for other metal mounting options.

Installation in steel

For compliance to the read/write distances as rated for a given data carrier to read/write head, the following Clear Zone Dimension must be used for a "non-flush" or "non-metal" data carrier mounting:

Clear zone dimensions

Data carriers	Fig.	A	D	C	B
BIS C-100-05/A		0	0	0	0
BIS C-103-_ _/A		0	0	0	0
BIS C-104-_ _/A		0	0	0	0
BIS C-105-_ _/A		0	0	0	0
BIS C-108-_ _/L		0	0	0	0
BIS C-117-05/A		0	0	0	0
BIS C-117-05/L	5	60			20
BIS C-121-04/L		0	0	0	0
BIS C-122-_ _/L		0	0	0	0
BIS C-127-05/L	4	30	30		30
BIS C-128-_ _/L	5	60			20
BIS C-130-05/L	5	70			2
BIS C-133-_ _/L		0	0	0	0
BIS C-134-_ _/L	2	70		11	
BIS C-150-_ _/A	1	20	20	22	
BIS C-190-_ _/L	3	20	17	20	
BIS C-191-_ _/L	3	9	27	9	

Read/write heads	Fig.	A	B	C
BIS C-300		0	0	0
BIS C-302		0	0	0
BIS C-305		0	0	0
BIS C-306		0	0	0
BIS C-310	2	60		13
BIS C-315		0	0	0
BIS C-318	1	50	50	30
BIS C-319	2	50		35
BIS C-323	2	60		13
BIS C-324	1	0	0	0
BIS C-325	2	0	0	0
BIS C-326	2	80		35
BIS C-327	1	50	50	20
BIS C-328	1	50	50	20
BIS C-350	1	60	50	60
BIS C-351	1	100	60	50

Dimensions in mm

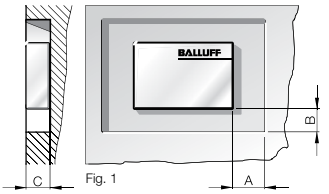

Fig. 1

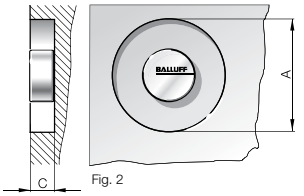

Fig. 2

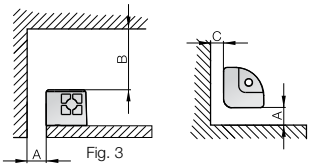

Fig. 3

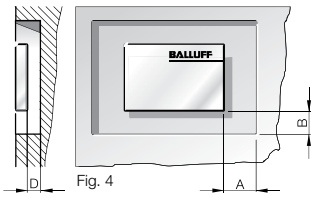

Fig. 4

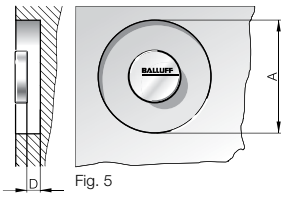

Fig. 5

Note! Depending on the combination of read/write head and data carrier, clear zone dimension A and B should always be selected for the larger of the components.

Installation in aluminum

With clear zone, static operation
When installing components in aluminum, provide clear zones for trouble-free operation. In static mode a clear zone depth in aluminum of at least 10 mm must be maintained, Fig. 1. Clear zone dimension **A** corresponds to the diameter of the larger communication partner (data carrier or read/write head) plus the maximum possible offset (see specification for read/write head), Fig. 2. When combined with read/write heads BIS C-318, 327, 328, 350, 351 and 355 dimension **B** and **C** are calculated from the length and width of the larger communication partner (data carrier or read/write head) plus the maximum permissible offset (see specification for read/write head), Fig. 3.

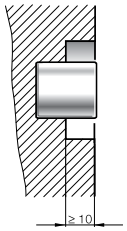

Fig. 1

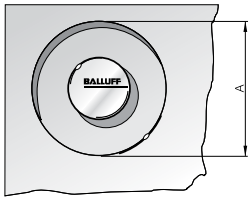

Fig. 2

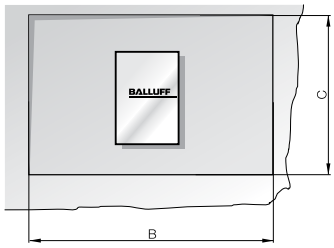

Fig. 3

With clear zone, dynamic operation
In dynamic mode a clear zone depth in aluminum of at least 10 mm must be maintained, Fig. 1. Clear zone dimension **A** corresponds to 2× the diameter of the larger communication partner + 1× the diameter of the smaller communication partner. Clear zone dimension **C** corresponds to the diameter of the larger communication partner plus the corresponding maximum offset (see specification for read/write head), Fig. 4. When combined with read/write heads BIS C-318, 327, 328, 350, 351 and 355 dimension **B** is calculated from 2× the read/write path (see specification for read/write heads) + the width of the data carrier. Clear zone dimension **C** corresponds to the read/write head length plus the corresponding maximum offset (see specification for read/write head), Fig. 5.

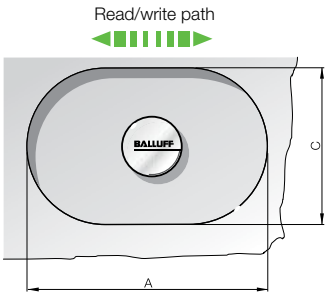

Fig. 4

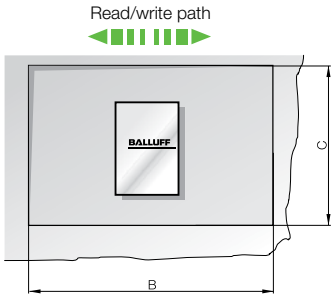

Fig. 5

Electric properties
Mechanical properties
Quality
BIS U
BIS M
BIS L
BIS C
BIS S
Interaction between read/write heads and data carriers
BVS

BIS C installation notes

Installation in SK taper

Data carrier	BIS C-122			BIS C-103			BIS C-105		
Taper DIN 69871-A	D^{H11}	t ±0.15	RPM_{max}	D^{H11}	t ±0.15	RPM_{max}	D^{H11}	t ±0.15	RPM_{max}
Nr. 30	10	4.65	90000	12	8.15	68000	12	6.15	68000
Nr. 40	10	4.65	75000	12	8.15	54000	12	6.15	54000
Nr. 45	10	4.65	66000	12	8.15	43000	12	6.15	43000
Nr. 50	10	4.65	59000	12	8.15	33000	12	6.15	33000

Dimensions in mm

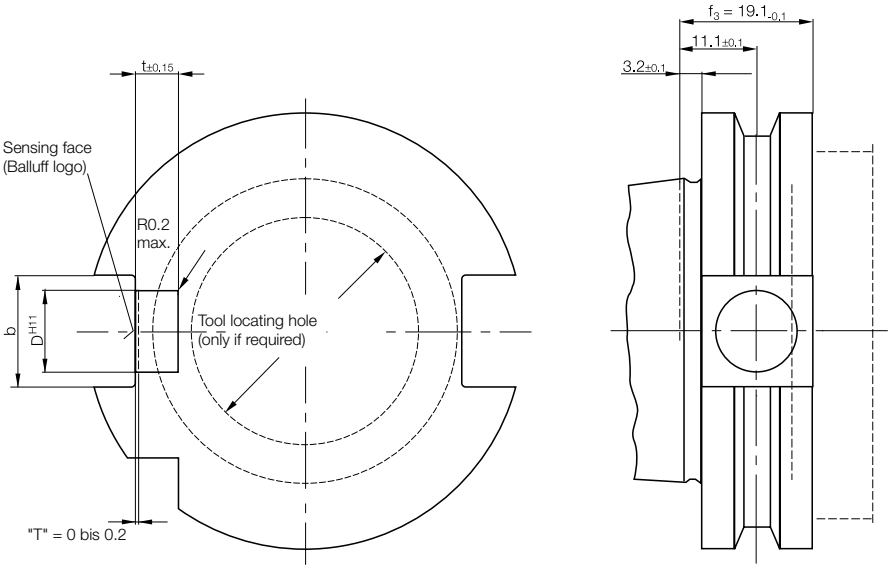

Installation in retention knob

Data carrier	BIS C-122		BIS C-103		BIS C-105	
Taper DIN 69871-A	D^{H11}	t ±0.15	D^{H11}	t ±0.15	D^{H11}	t ±0.15
Nr. 30						
Nr. 40	10	4.65				
Nr. 45	10	4.65	12	8.15	12	6.15
Nr. 50	10	4.65	12	8.15	12	6.15

Dimensions in mm

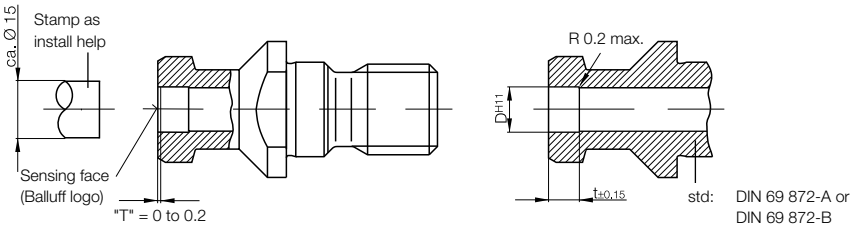

Installation

1. Degrease gluing surfaces.
2. Apply a bead of glue (e.g. LOCTITE Hysol 1C) approximately 3 mm wide around the perimeter of the data carrier housing. Note manufacturer's instructions!
3. Press in data carrier housing by hand. Note dimension "T"!
4. Remove excess glue.
5. Allow to harden.

Installation in HSK taper

Data carrier	BIS C-122	
HSK Form A ISO/DIN 12164-1	$h_{3\ +0.20}$	RPM_{max}
32	5.4	96000
49	5.2	80000
50	5.1	75000
63	5	65000
80	4.9	57000
100	4.9	48000

Dimensions in mm

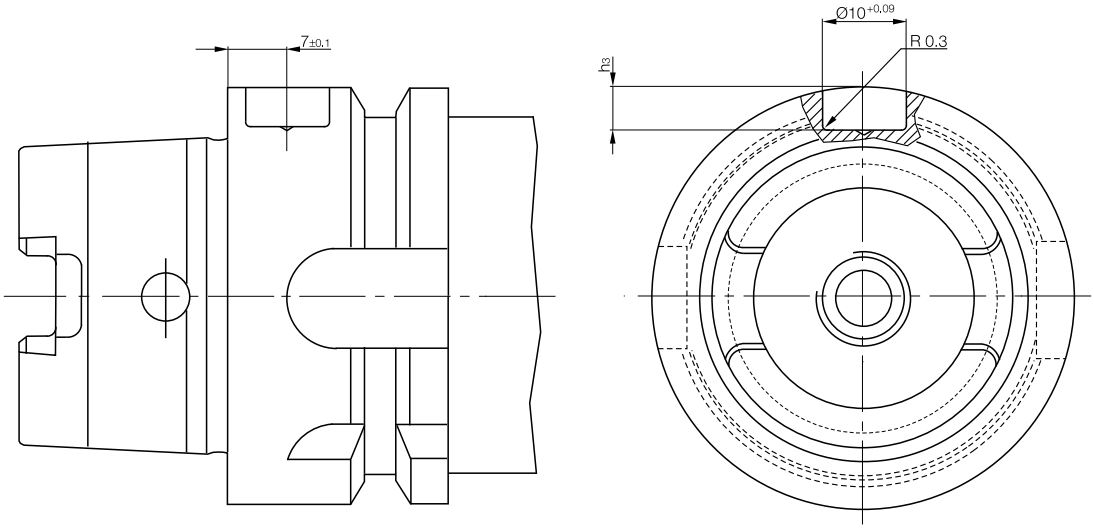

Mechanical strength

Data carriers and read/write heads BIS C-1_ _, BIS C-3_ _	
Shock load	100 g/6 ms per EN 60068-2-27 and 100 g/2 ms per EN 60068-2-29
Vibration	20 g, 10...2000 Hz per EN 60068-2-6
	Values apply to data carriers BIS C-1_ _ and read/write heads BIS C-3_ _ except for the non-potted read/write heads BIS C-350, BIS C-351, BIS C-352 and BIS C-355.

Processors and non-potted read/write heads BIS C-6_ _ _, BIS C-350, BIS C-351, BIS C-352, BIS C-355	
Shock load	15 g/11 ms per EN 60068-2-27 and 15 g/6 ms per EN 60068-2-29
Vibration	5 g, 10...150 Hz per EN 60068-2-6

Electric properties
Mechanical properties
Quality
BIS U
BIS M
BIS L
BIS C
BIS S
Interaction between read/write heads and data carriers
BVS

BIS C read/write times

Read/write cycles

Data carriers	Memory type	Code	Write cycles up to 30 °C	Write cycles up to 70 °C	Read cycles	Memory Organization
511 bytes	EEPROM	-04	1000000	500000	unlimited	32 byte blocks
1023 bytes	EEPROM	-05	1000000	500000	unlimited	32 byte blocks
2047 bytes	EEPROM	-11	1000000	500000	unlimited	64 byte blocks
8 Kbytes	FRAM	-32	unlimited	unlimited	unlimited	64 byte blocks

Read times in static mode

For double read and compare:

Data carrier with 32-bytes blocks		**Data carrier with 64-bytes blocks**	
Bytes	Read time	Bytes	Read time
from 0 up to 31	110 ms	from 0 up to 63	220 ms
for each additional 32 bytes started add an additional	120 ms	for each additional 64 bytes started add an additional	230 ms
from 0 up to 255	= 950 ms	from 0 up to 2047	= 7350 ms

Write times in static mode

Includes checking and comparing:

Data carrier with 32-bytes blocks		**Data carrier with 64-bytes blocks**	
Bytes	Write time [ms]	Bytes	Write time [ms]
from 0 up to 31	110 + n × 10	from 0 up to 63	220 + n × 10
≥ 32	y × 120 + n × 10		y × 230 + n × 10
from 0 up to 255	= max. 3510	from 0 up to 2047	= max. 27830

n = number of contiguous bytes to be programmed
y = number of blocks to be processed

Example:
Write 17 bytes starting at address 187. Data carrier block size = 32 bytes. Blocks 5 and 6 are processed, since the start address 187 is in block 5 and end address 204 is in block 6.

t = 2 × 120 + 17 × 10 = **410 ms**

Read times in dynamic mode

Read times within the 1st block for double read and compare:

Data carrier with 32-bytes blocks		**Data carrier with 64-bytes blocks**	
Bytes	Read time	Bytes	Read time
from 0 up to 3	14 ms	from 0 up to 3	14 ms
for each additional bytes	3.5 ms	for each additional bytes	3.5 ms
from 0 up to 31	112 ms	from 0 up to 64	224 ms

The time indicated apply after the data carrier has been recognized. If the tag has not been recognized, an additional 30 ms must be added to allow for creating the energy field necessary to recognize the Data carrier.

Example:
Read 11 bytes starting at address 9, i.e. the highest address to be read is 20 (use for “m” in the formula).

t = 14 ms + (m – 3) × 3.5 ms = **73.5 ms**

In the internal memory organization of the data carrier, a distinction is made between the two block sizes 32 and 64 bytes (also referred to as ‘page size’).

BIS C read/write times

Memory organization

Memory size up to 1023 bytes = 32 bytes per block
Memory size 2047 bytes and larger = 64 bytes per block

Maximum speed

To calculate the permissible speed at which the data carrier and head may move relative to one another, the static distance values are used (see section BIS C).

The permissible speed is:

$$V_{max.\ perm.} = \frac{\text{Path}}{\text{Time}} = \frac{2 \times |\text{offset value}|}{\text{Processing time}}$$

The offset value is dependent on the read/write distance actually used in the system.

$$\text{Processing time} = \text{Data-carrier detection time} + \text{Read/write time of first block to be read} + n^1 \times \text{Read/write time for other started blocks}$$

n^1 = Number of started blocks

BIS S installation notes

Mounting definitions

Flush in steel
Active sensing surface can be flush mounted to surface of steel.
Consult part data sheet for additional information.

Non-flush on steel
Active sensing surface must be clear and not be surrounded by steel.
Consult part data sheet and clear zone definitions for more information.

Non-metal
Total clearance zone from any kind of metal must be maintained.
Consult part data sheet and clear zone definitions for more information.

Consult technical support for other metal mounting options.

Installation in steel

For compliance to the read/write distances as rated for a given data carrier to read/write head, the following Clear Zone Dimension must be used for a "non-flush" data carrier mounting:

Clear zone dimensions

Data carriers	Fig.	A	B	C
BIS S-108-_ _/L	1	35	35	11
BIS S-150-_ _/A	1	20	20	22

Read/write heads	Fig.	A	D	B
BIS S-301	2	80	80	40
BIS S-302	3	10	10	40
BIS S-303	4	10	10	40

Dimensions in mm

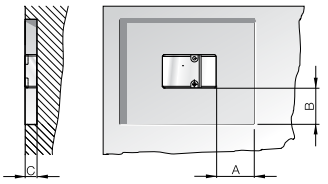

Fig. 1

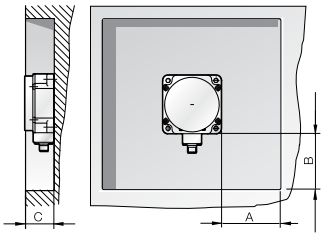

Fig. 2

Installation in aluminum

Clear zone dimensions

Data carriers	Fig.	A	B	C
BIS S-108-_ _/L	1	35	35	11
BIS S-150-_ _/A	1	20	20	22

Read/write heads	Fig.	A	D	B
BIS S-301	2	80	80	40
BIS S-302	3	40	40	40
BIS S-303	4	40	40	40

Dimensions in mm

Note! Depending on the combination of read/write head and data carrier, clear zone dimension A and B should always be selected for the larger of the components.

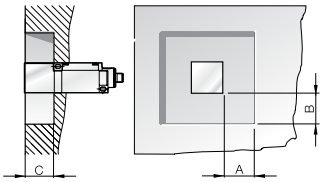

Fig. 3

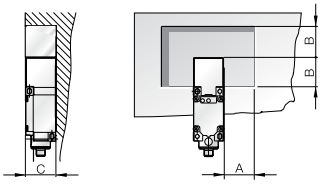

Fig. 4

BIS S installation notes and read/write times

Mechanical strength

Data carriers and read/write heads BIS S-1_ _, BIS S-3_ _	
Shock load	100 g/6 ms per EN 60068-2-27 and 100 g/2 ms per EN 60068-2-29
Vibration	20 g, 10...2000 Hz per EN 60068-2-6

Processors BIS S-6_ _ _	
Shock load	15 g/11 ms per EN 60068-2-27 and 15 g/6 ms per EN 60068-2-29
Vibration	5 g, 10...150 Hz per EN 60068-2-6

Permissible inclination

The sensing surfaces of read/write head and data carrier should be installed in parallel. If the inclination of data carrier to read/write head becomes over 10 degrees, read/write distance and offset will decrease.

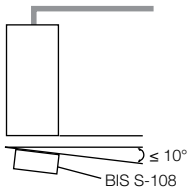

Read/write cycles

Data carriers	Memory type	Write cycles	Write cycles	Read cycles	Memory organization
8 kBytes	FRAM	unlimited	unlimited	unlimited	64 byte blocks
16 kBytes	FRAM	unlimited	unlimited	unlimited	64 byte blocks
32 kBytes	FRAM	unlimited	unlimited	unlimited	128 byte blocks

Read times

Byte	read time
from 0 to 63	29 ms
for each additional 64 bytes started add an additional	31 ms
from 0 to 2047	990 ms

Write times

Byte	write time [ms]
from 0 to 63	31 + n × 1.5
≥ 64 from 0 to 2047	y × 31 + n × 1.5 = max. 4064

n = Number of contiguous bytes to write
y = Number of blocks to process

Example:
Write 87 bytes starting with Address 187. Data carrier = 64-byte blocks. Blocks 2 to 5 are processed, since start address 187 is in Block 2 and end address 274 is in Block 5.

t = 4 × 31 + 87 × 1.5 = 255 ms

Maximum speed

No dynamic operation is recommendet.

Electric properties
Mechanical properties
Quality
BIS U
BIS M
BIS L
BIS C
BIS S
Interaction between read/write heads and data carriers
BVS

Interaction between read/write heads and data carriers

Spatial arrangement of read/write head resp. read head and data carrier

The key to reliable data exchange between the read/write head resp. read head and the data carrier is maintaining sufficient dwell time of the data carrier within a specified spatial distance from the read/write head resp. read head.
The sketches on the two following pages are intended to clarify this requirement, in the first sketch for read/write heads resp. read heads with non-directional operation, in the second for read/write heads resp. read heads in cases where the data carrier have to pass by from a certain direction or at a certain orientation.
For a **static read/write resp. read operation** the data carrier stops completely in front of the read/write resp. read heads; this permits a greater distance between the two.

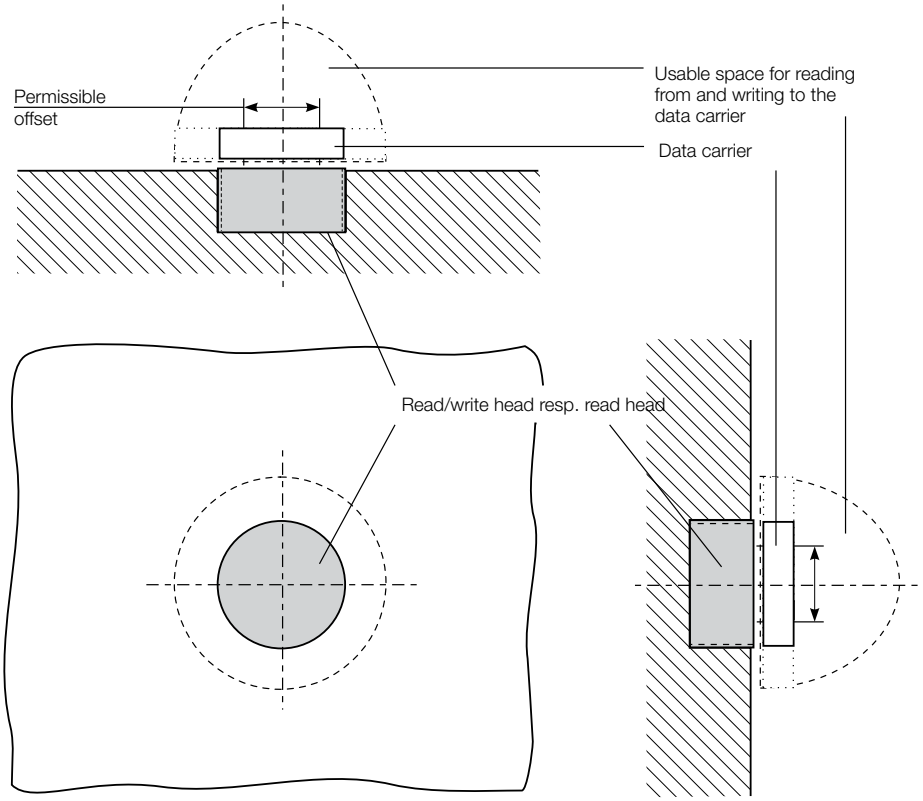

Spatial arrangement of read/write head resp. read head and data carrier for non-directional read/write heads resp. read heads and **flush mounting** (circular antenna).

Interaction between read/write heads and data carriers

For **dynamic operation** the data carrier is read or programmed on the fly. The shorter distance is necessary in order to achieve as large a read/write resp. read path as possible.
Each read/write head or read head has certain data carrier which can be used with it (the pairing is based on physical size and antenna field configuration).
The associated specifications for distance and permissible offset are indicated as well as the distance and relative speed between the read/write head or read head and the data carrier.

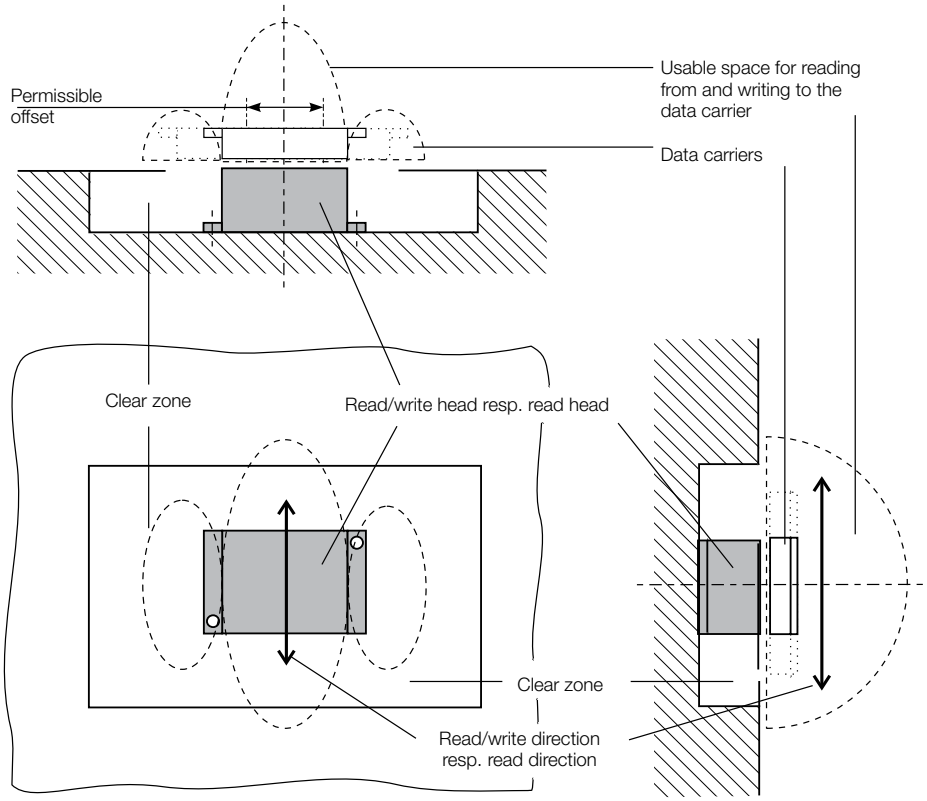

Spatial arrangement of read/write head resp. read head and data carrier for directional read/write heads resp. read heads and **non-flush mount** (bar-shaped antenna).

Electric properties
Mechanical properties
Quality
BIS U
BIS M
BIS L
BIS C
BIS S
Interaction between read/write heads and data carriers
BVS

Sensor overview

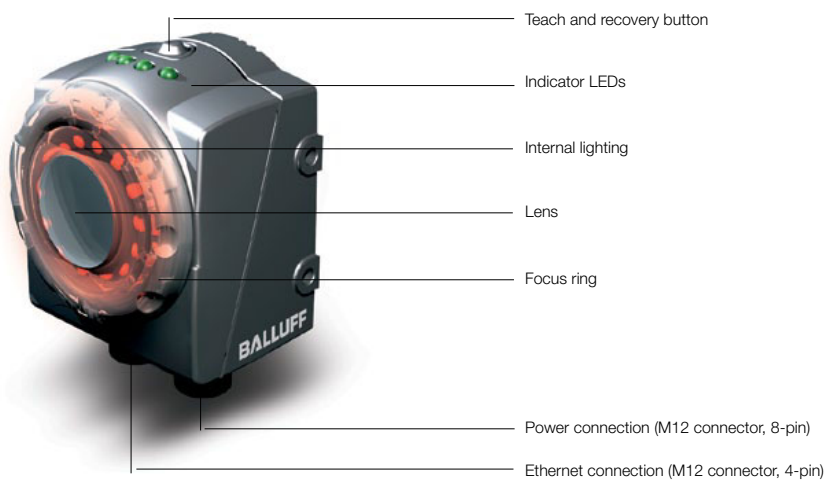

Current image

... is the image captured by the sensor, which is then processed.

Reference image

Saved reference image. The pattern/contour/corner points in the region of interest within the reference image define the pattern (or contour) detected by the "Detect pattern", "Detect 360 degree pattern" and "Detect contour" tool. The reference image does not have a direct influence on any other tools, it is used as a reference for detecting OK or NOK parts.

Region of interest (ROI)

... is the area within an image marked by a frame and inspected by a tool. In the case of the tools "Detect pattern" and "Detect 360° pattern", the ROI is the pattern that the sensor is searching for whereas the image area being inspected is the search area.

Inspection

An inspection consists of:
- a taught-in reference image
- the tools that inspect one or more regions of interest within the digital image on the object
- and the three functions assigned to digital outputs e.g. output 1 signals the result "Inspection OK" and output 2 signals "Inspection not OK".

All settings such as trigger, lighting etc. are saved during an inspection.

Inspection result

Possible results include: "Inspection OK" if the inspection returns a positive result for all tools. "Inspection not OK" if at least one tool returns a negative result or one or more tools are not taken into account. Outputs can be assigned directly to single inspections.

Locator

A locator tool can be used to compensate for a part that frequently changes position. However, the part must not leave the field of view. The locator tool follows the position of the part within the field of view and aligns all other tools according to the current position of the part.

Inspection times

The total inspection time consists of the exposure time, capture time and processing time.

Exposure time: the exposure time is referred to as the "shutter speed". The amount of light that shines on the image sensor is directly proportional to the exposure time and the light currently available. The longer the exposure time, the greater the amount of light that shines on the image sensor. When configuring the correct exposure time, the following factors are most important:

- Speed of the part scheduled for inspection
- Number of parts per second
- Continuously available light

Capture time: The time required to capture an image. After exposure of the image sensor, the image must be transferred to the memory on the device. The whole process takes approximately 30 ms for a complete image. The time decreases considerably if only part of the complete image is captured.

Processing time: The time taken to process the captured image. Depends on the operations and tools used for the inspection.

Working distance and field of view

The **working distance** describes the minimum and maximum distance between the sensor lens and object. The **field of view** is the surface area that the sensor can detect at the specified working distance. The larger the working distance, the larger the field of view. The light intensity of the illuminated object decreases by the square root of the working distance. Objects positioned further away appear darker than closer objects as a result.

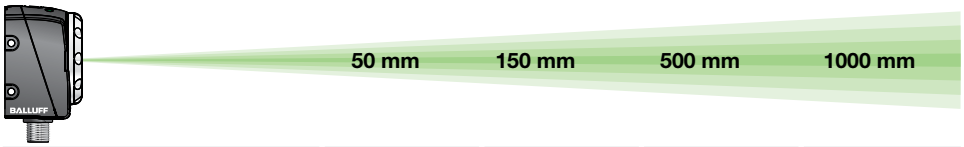

6 mm Wide-angle lens	34×25 mm	101x76mm	338x253mm	676×507 mm
8 mm Standard lens	24×18 mm	72x54mm	240x180mm	480×360 mm
12 mm Telephoto lens	16×12 mm	48x36mm	160x120mm	320×240 mm
16 mm Telephoto lens		43×32 mm*	120x90mm	240×180 mm

* Working range 180 to 1000 mm

Bring your working range up close with the telephoto lens. Or take advantage of the larger field of view at the same working distance offered by the wide-angle and standard lenses. Use the distance computer:
www.balluff.us/vision

Electric properties
Mechanical properties
Quality
BIS U
BIS M
BIS L
BIS C
BIS S
Interaction between read/write heads and data carriers
BVS

IP address

The IP address is a unique address that identifies a network device and allows you to communicate with the sensor.
The standard address of all BVS devices is: **172.27.101.208**

Supply voltage U_B

... is the voltage range in which flawless functioning of the sensor is assured. It includes all voltage tolerances and ripple.

Rated operating current I_e

On BVS Vision Sensors:
... is the maximum current with which the sensor may be loaded at its output in continuous operation.

On BAE lights:
... is the current required for operation.

Typ. detection rate

Different calculating times are required to evaluate the tools in an inspection. The typical detection rate is a guide value that indicates how often a part can be inspected per second.

Ambient temperature range T_a

The ambient temperature determines the temperature range in which the sensor may be operated.

Short-circuit protection and overload protection

All DC sensors feature this protection device. In the event of overload or short-circuit at the output, the output transistor is automatically switched off. As soon as the malfunction has been corrected, the output stage is reset to normal functioning.

Trigger

The trigger signal starts an event. A trigger signal initiates the capture and evaluation of an image in conjunction with the BVS. The BVS has different trigger settings that can be configured using software available free of charge.

Eye safety per EN 62471:2008

Any LED lights are categorized into different groups based on the degree of risk to human eyes and skin. All Balluff lights are in the lowest two groups.

Extempt group **Sensors or lights do not pose a photobiological risk**	Risk group 1 **Sensors or lights do not pose a risk due to standard precautionary measures taken by the user**
■ Vision Sensors BVS-E ■ Background lights, red light ■ Ring lights, red and white light ■ Line lights, red and white light ■ Line lights, infrared during normal operation ■ Spotlights, red light ■ Dark field illumination, red light ■ Coaxial lights, red light	■ Background lights, infrared ■ Ring lights, infrared ■ Line lights, infrared during boost mode ■ Spotlights, infrared

Software

You will require the ConVis software to operate Balluff Vision Sensors, which is available free of charge. The product is also supplied with a CD ROM containing the software.

ConVis software

Step 1
Connect
Establish a connection between the ConVis software and the sensor. Determine the image brightness and lighting settings.

Step 2
Configure
Determine the features you wish to inspect and select all the relevant tools. Configure the output signals.

Step 3
Run
Test the inspection – view the results and correct if necessary.

BVS-E with Balluff BVS ConVis – the "Easy to Use" software
Connect the BVS-E Vision Sensor to your PC over Ethernet.
The built-in software wizard guides you to successful configuration in just three steps. Simply enter your desired inspection parts or features, test your inspection, and check the results on the screen. Slight changes and corrections are easily made. Clear guidance eliminates the need to learn a programming language or undergo expensive training.

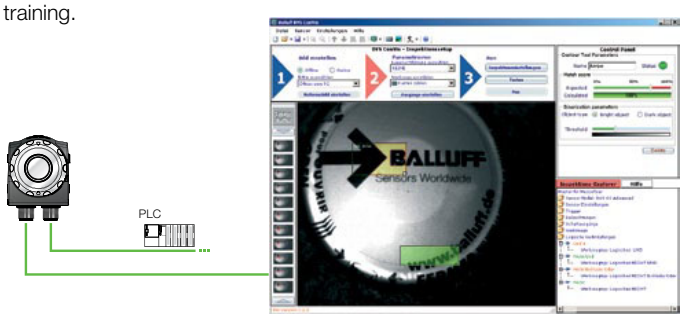

Monitor

Step 1
Connect
Connect the sensor to the monitor.

Step 2
Monitor
Visualizes the sensor images and inspection results and displays process statistics.

Step 3
Adjust
Set the tool parameters and test your inspection.

Especially easy to set up using the monitor
If you want to increase the statistical quality of your checks or easily modify your checks in line with part changes, you should be able to see what the sensor sees. With the vision sensor monitor, this is no problem. Making corrections in-process is easy, because the display provides continuous status monitoring in-place. So you are continually checking the sensor function and you can immediately correct deviations. Product defects are detected directly.

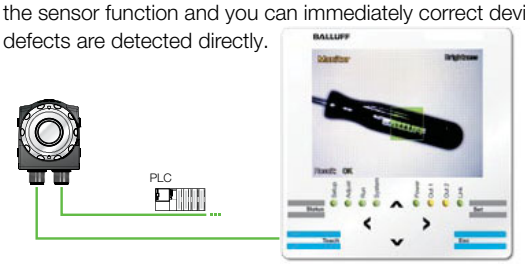

Electric properties
Mechanical properties
Quality
BIS U
BIS M
BIS L
BIS C
BIS S
Interaction between read/write heads and data carriers
BVS

Index sorted by order code

Order Code	Part Description	Page
BAE		
BAE0001	BAE PS-XA-1W-24-007-001	351
BAE0002	BAE PS-XA-1W-24-100-004	351
BAE0003	BAE PS-XA-1W-24-200-005	351
BAE0004	BAE PS-XA-1W-24-012-002	351
BAE0005	BAE PS-XA-1W-24-025-002	351
BAE0006	BAE PS-XA-1W-24-050-003	351
BAE0007	BAE PS-XA-3Y-24-050-009	351
BAE0008	BAE PS-XA-3Y-24-100-006	351
BAE0009	BAE PS-XA-3Y-24-200-007	351
BAE000E	BAE LX-VS-HR025	336
BAE000F	BAE LX-VS-HR050	336
BAE000H	BAE LX-VS-HR100	337
BAE000J	BAE LX-VS-RR100	340
BAE000K	BAE LX-VS-RI100	341
BAE0036	BAE PS-XA-1W-12-015-001	351
BAE0039	BAE PS-XA-1W-12-025-002	351
BAE003E	BAE PS-XA-1W-12-050-002	351
BAE003H	BAE PS-XA-1W-12-100-003	351
BAE003J	BAE PS-XA-1W-24-038-003	351
BAE003K	BAE PS-XA-1W-48-025-003	351
BAE003L	BAE PS-XA-1W-48-050-004	351
BAE003M	BAE PS-XA-1W-48-100-005	351
BAE003R	BAE PS-XA-3Y-24-400-010	351
BAE003U	BIS Z-EL-001-Ethernet	175
BAE003W	BIS Z-EL-002-RS232	175
BAE0049	BIS C-703-A	326
BAE004C	BIS C-720-01-03	238
BAE0088	BIS C-810-0-003	237
BAE008C	BIS C-820-0-004-D	237
BAE0094	BIS C-850	236
BAE0095	BIS C-851	236
BAE0096	BIS C-852	236
BAE0097	BIS C-853	236
BAE0098	BIS S-850	253
BAE00AM	BAE LX-VS-DR090	348
BAE00AN	BAE LX-VS-RW100	341
BAE00AP	BAE LX-VS-LR085	342
BAE00AR	BAE LX-VS-LW085	343
BAE00AT	BAE LX-VS-LI085	343
BAE00AW	BAE LX-VS-LW170	343
BAE00AY	BAE LX-VS-LI170	343
BAE00AZ	BAE LX-VS-LR170	342
BAE00C5	BAE LX-VS-HR150	338
BAE00EE	BIS U-870-1-008-X-000	29
BAE00EH	BAE PD-VS-002-E	270
BAE00EK	BAE PS-XA-1W-24-050-013	353
BAE00EN	BAE PS-XA-1W-24-038-601	353
BAE00EP	BAE PS-XA-1W-24-038-602	353
BAE00ER	BAE PS-XA-1W-24-038-603	353
BAE00ET	BAE PS-XA-1W-24-080-604	353
BAE00EU	BAE PS-XA-1W-24-100-014	353
BAE00FL	BAE PS-XA-1W-24-080-605	353
BAE00FM	BAE LX-VS-RW100-S	341
BAE00FN	BAE LX-VS-RI100-S	341
BAE00FP	BAE LX-VS-RR100-S	340
BAE00FR	BAE LX-VS-HI100	337
BAE00FT	BAE LX-VS-SR030	345
BAE00FW	BAE PS-XA-1W-24-038-607	353
BAE00FY	BAE PS-XA-1W-24-080-606	353
BAE00H0	BAE LX-VS-SR018	345
BAE00H1	BAE LX-VS-SI018	345
BAE00H2	BAE LX-VS-SI030	345
BAE00HJ	BIS M-873-1-008-X-000-3002	125
BAE00HK	BIS M-873-1-008-X-005-3002	125
BAE00HL	BIS M-870-1-008-X-005-3000	121
BAE00HM	BIS M-871-1-008-X-005-3000	121
BAE00HN	BIS M-874-1-008-X-005-3002	125
BAE00HP	BIS M-873-1-008-X-005-3000	121
BAE00HR	BIS M-870-1-008-X-005-3002	125
BAE00HT	BIS M-870-1-008-X-000-3000	121
BAE00HU	BIS M-870-1-008-X-000-3001	123
BAE00HW	BIS C-870-1-008-X-000-3000	229
BAE00HY	BIS M-873-1-008-X-000-3000	121
BAE00J	BIS M-874-1-008-X-000-3002	125
BAE00J2	BIS M-874-1-008-X-000-3000	121
BAE00J3	BIS M-874-1-008-X-000-3001	123
BAE00J5	BIS C-873-1-008-000-3001	233
BAE00J7	BIS M-873-1-008-X-001-3002	125
BAE00J8	BIS U-870-1-008-X-001	29
BAE00J9	BAE LX-VS-OR50	347
BAE00JA	BAE LX-VS-OR100	347
BAE00JC	BAE LX-VS-HR200	339
BAE00JE	BAE LX-VS-HI200	339
BAE00JF	BAE LX-VS-HR100-E	339
BAE00JJ	BIS Z-GW-001-IND	119
BAE00JK	BIS Z-GW-001-PBS	119
BAE00JL	BIS Z-GW-001-RS232	119
BAE00JM	BIS Z-GW-001-TCP	119
BAE00JU	BIS M-874-1-008-X-001-3002	125
BAE00JW	BIS M-870-1-008-X-004-3002	125
BAE00K0	BIS M-871-1-008-X-000-3001	123
BAE00KE	BAE LX-XO-PL018-L1-S4	349
BAE00KF	BAE LX-VS-SR012	344
BAE00KP	BAE LX-VS-HI150	338
BAE00KR	BAE LX-VS-HI050	337
BAE00KT	BIS C-873-1-008-005-3001	233
BAE00KW	BIS C-870-1-008-X-001-3000	229
BAE00KY	BIS C-873-1-008-X-000-3000	229
BAE00KZ	BAE LX-XO-PL018-L2-S4	349
BAE00L0	BIS M-873-1-008-X-001-3001	123
BAE00L1	BIS M-873-1-008-X-000-3001	123
BAE00L2	BIS M-871-1-008-X-000-3000	121
BAE00L5	BIS U-870-1-008-X-000-1-3000	29
BAE00L6	BIS U-870-1-008-X-001-1-3000	29
BAM		
BAM002R	BMS RS-M-D12-0150-00	319
BAM002W	BMS CU-M-D12-A040-00	319
BAM002Z	BMS CC-M-D12-B-00	319
BAM0031	BMS CS-M-D12-IZ	318
BAM00EM	BES 14,5-BS-1	324
BAM00ET	BES 16,0-BS-1	324
BAM00EY	BES 18-HW-1	323
BAM00F2	BES 18,0-BS-1	324
BAM00F7	BES 18,0-KB-3	323
BAM00F9	BES 18,0-KB-3-F-SA1	323
BAM00FT	BES 18.0-KH-2S	324
BAM00HH	BES 30-HW-1	323
BAM00HN	BES 30,0-BS-1	324
BAM00HU	BES 30,0-KB-3-F	323
BAM00J4	BES 30,0-KH-2L	324
BAM00J6	BES 30,0-KH-2S	324
BAM00JT	BES HS-01-P1-C16/Q40	321
BAM00JU	BES HS-01-P1-C8/Q40	321
BAM00JW	BES Q40-HW-1	320
BAM00WN	BVS Z-MB-01	328
BAM012A	BIS C-300-HG1	326
BAM012C	BIS C-300-ZA1	239
BAM012H	BIS L-203-ZH1	179
BAM012J	BIS Z-HG-002	326
BAM012K	BIS Z-HG-003	326
BAM012L	BIS Z-HW-001	321
BAM012N	BIS Z-ZA-001	129, 179
BAM012P	BKS-23-CS-00	291
BAM012T	BKS-7/8-CS-00-A	295
BAM018M	BIS Z-SP-001	325
BAM01A7	BAM OF-VS-001-D-RX100	340
BAM01A8	BAM PC-AE-002-1	332
BAM01AC	BAM MB-XA-003-B03-1	329
BAM01AE	BAM MB-XA-002-B02-1	329
BAM01HL	BIS U-500-EF-01	275
BAM01HM	BIS U-500-EF-02	275
BAM01HN	BIS U-500-EF-05	275
BAM01HP	BIS U-500-EF-10	275
BAM01JK	BIS Z-HW-003	318
BAM01KN	BIS Z-HW-004	316
BAM01LW	BIS Z-SP-003	317
BAM01MY	BAM MB-XA-010-B07-4	322
BAM01RR	BAM PC-VS-008-1	333
BAM01TM	BAM MC-XA-016-Q40-1	320
BAM01UH	BAM MB-XA-012-B09-4	322
BAM01W4	BAM MC-XA-021-M18-2	325
BAM01W5	BAM MC-XA-021-M30-2	325
BAM01WJ	BAM MC-XA-021-M18-4	325
BAM01WK	BAM MC-XA-021-M30-4	325
BAM01WL	BAM MC-XA-021-M18-A	325
BAM01WM	BAM MC-XA-021-M30-A	325
BAM01Y3	BAM MC-XA-018-B04-4	322
BAM01Y8	BAM PC-AM-010-4	322

Index sorted by order code

Order Code	Part Description	Page
BAM01YK	BIS Z-HW-005	317
BAM01YP	BMS CS-M-S25-DX15-00	331
BAM01YT	BMS CUJ-M-S25-D045-00	331
BAM0206	BAM FK-VS-002-03-1	332
BCC		
BCC00PJ	BIS C-520-PVC-05	287
BCC00PK	BIS C-521-PVC-02	287
BCC00PL	BIS C-522-PVC-02	287
BCC00PP	BIS C-523-PU1-05	287
BCC00PR	BIS C-524-PVC-01,5	287
BCC00R2	BIS L-503-PU1-05	157
BCC00R3	BIS L-503-PU1-10	157
BCC00R4	BIS L-503-PU1-15	157
BCC00R5	BIS L-503-PU1-20	157
BCC00T2	BIS Z-AK-001-PU1-03	326
BCC00T6	BKS-S 52-00	289
BCC00T8	BKS-S 79-00	175
BCC00TK	BKS-S115-TW2-03	175
BCC00TL	BKS-S117-00	285
BCC00TM	BKS-S117-R01	175
BCC011M	BKS-S 45-00	289
BCC011N	BKS-S 46-00	289
BCC02M8	BCC M313-0000-10-001-PX0334-020	311
BCC02M9	BCC M313-0000-10-001-PX0334-050	311
BCC02MA	BCC M313-0000-10-001-PX0334-100	311
BCC02NU	BCC M313-0000-10-001-VX8334-020	311
BCC02NW	BCC M313-0000-10-001-VX8334-050	311
BCC02NY	BCC M313-0000-10-001-VX8334-100	311
BCC032F	BCC M415-0000-1A-003-PX0434-020	311
BCC032H	BCC M415-0000-1A-003-PX0434-050	311
BCC032J	BCC M415-0000-1A-003-PX0434-100	311
BCC0367	BCC M415-0000-1A-003-VX8434-020	311
BCC0368	BCC M415-0000-1A-003-VX8434-050	311
BCC0369	BCC M415-0000-1A-003-VX8434-100	311
BCC03WZ	BCC M474-0000-2D-000-51X475-000	292
BCC03Y1	BCC M474-0000-1D-000-51X475-000	293
BCC04MC	BCC M478-0000-1A-000-43X834-000	282
BCC04ME	BCC M488-0000-1A-000-43X834-000	283
BCC06F6	BCC M435-0000-1A-000-51X475-000	298
BCC06F7	BCC M434-0000-2A-000-51X475-000	298
BCC06Y4	BCC M415-0000-2A-R03	299
BCC06ZN	BCC M475-0000-1A-000-01X575-000	306
BCC0709	BCC A334-0000-20-000-51X4A5-000	306
BCC0714	BCC M475-0000-2B-000-01X575-000	290
BCC0715	BCC M475-0000-1B-000-01X575-000	290
BCC0716	BCC M485-0000-2B-000-01X575-000	290
BCC0717	BCC M485-0000-1B-000-01X575-000	290
BCC0718	BCC M415-0000-2B-R01	291
BCC0719	BCC M415-0000-2B-R02	291
BCC075U	BDN C-D11-CN-EDN-01-030M	304
BCC07A9	BDN C-F01-AN-NAN-01	294
BCC07AA	BDN C-F01-CN-NAN-01	294
BCC07AC	BDN C-F11-AN-NDN-01	296

Order Code	Part Description	Page
BCC07AE	BDN C-F11-CN-NDN-01	296, 305
BCC07J5	BDN C-R00-FE-NDD-01	298
BCC07WP	BDN T-DTE-AA-01	295
BCC07WR	BDN T-DTN-DD-01	296
BCC07WR	BDN T-DTN-DD-01	299
BCC07WZ	BDN T-DTE-AD-01	304
BCC07Y9	BDN R-CEA-01	294, 304
BCC07YC	BDN R-CED-01	297, 305
BCC07YE	BDN R-AED-01	297
BCC0869	BCC M474-0000-2A-000-01X475-000	281, 301
BCC08CA	BCC M415-M415-M415-U0007-000	299
BCC0994	BCC M418-0000-1A-046-PS0825-020	310
BCC0995	BCC M418-0000-1A-046-PS0825-050	310
BCC0996	BCC M418-0000-1A-046-PS0825-100	310
BCC09HL	BCC M418-0000-1A-046-PS0825-200	310
BCC09N2	BCC E878-0000-Z1-41X8T4	317
BCC0A03	BCC M438-0000-1A-000-51X850-000	283
BCC0ACA	BCC 0000-0000-00-000-PS72N1-10X	291
BCC0ANC	BCC M415-M415-5D-687-ES64N8-050	311
BCC0AT8	BCC M418-0000-1A-046-PS0825-400	310
BCC0CR2	BCC M415-U024-8F-696-VX04T8-018	281
BCC0E7T	BCC M415-E834-AG-672-ES64N8-050	310
BCC0E7W	BCC M415-E834-AG-672-ES64N8-150	310
BCC0F2R	BCC E818-E818-N0-RA095-000	292
BIS		
BIS0002	BIS C-100-05/A	189
BIS0004	BIS C-103-05/A	188
BIS0006	BIS C-104-11/A	190
BIS0007	BIS C-104-32/A	190
BIS0009	BIS C-105-05/A	188
BIS000C	BIS C-108-05/L	190
BIS000F	BIS C-108-05/L-SA2	192
BIS000H	BIS C-108-11/L	190
BIS000J	BIS C-108-11/L-SA2	192
BIS000K	BIS C-108-32/L	190
BIS000M	BIS C-117-05/A	189
BIS000N	BIS C-117-05/L	189
BIS000R	BIS C-117-11/L	189
BIS000T	BIS C-121-04/L	188
BIS000W	BIS C-121-04/L-SA1	192
BIS0011	BIS C-122-04/L	188
BIS0015	BIS C-122-11/L	188
BIS0017	BIS C-127-05/L	190
BIS0019	BIS C-128-05/L	189
BIS001C	BIS C-128-11/L	189
BIS001E	BIS C-130-05/L	189
BIS001H	BIS C-130-05/L-SA1	192
BIS001Z	BIS C-133-05/L	193
BIS0020	BIS C-134-05/L-H120	193
BIS0021	BIS C-134-11/L	193
BIS0028	BIS C-150-05/A	191
BIS002A	BIS C-150-11/A	191
BIS002E	BIS C-150-32/A	191

Order Code	Part Description	Page
BIS002K	BIS C-190-05/L	191
BIS002M	BIS C-190-11/L	191
BIS002N	BIS C-190-32/L	191
BIS002P	BIS C-191-05/L	191
BIS002R	BIS C-191-11/L	191
BIS002Y	BIS C-122-04/L-ZC1	239
BIS0033	BIS L-100-01/L	138
BIS0035	BIS L-100-05/L-RO	141
BIS0036	BIS L-101-01/L	139
BIS0038	BIS L-101-05/L-RO	141
BIS0039	BIS L-102-01/L	139
BIS003C	BIS L-102-05/L-RO	141
BIS003E	BIS L-103-05/L	139
BIS003F	BIS L-103-05/L-RO	141
BIS003N	BIS L-150-05/A	139
BIS003R	BIS L-200-03/L	141
BIS003T	BIS L-201-03/L	141
BIS003U	BIS L-202-03/L	141
BIS003W	BIS L-203-03/L	141
BIS003Y	BIS M-101-01/L	41
BIS003Z	BIS M-102-01/L	43
BIS0040	BIS M-105-01/A	38
BIS0042	BIS M-105-02/A	38
BIS0043	BIS M-108-02/L	46
BIS0044	BIS M-110-02/L	39
BIS0045	BIS M-111-02/L	41
BIS0046	BIS M-112-02/L	43
BIS0047	BIS M-120-01/L	47
BIS0048	BIS M-122-01/A	38
BIS0049	BIS M-122-01/A-ZC1	49, 129
BIS004A	BIS M-122-02/A	38
BIS004F	BIS M-150-02/A	54
BIS004H	BIS M-151-02/A	54
BIS004J	BIS S-108-32/L	242
BIS004K	BIS S-108-42/L	242
BIS004L	BIS S-108-52/L	242
BIS004N	BIS S-150-42/A	243
BIS004P	BIS S-150-52/A	243
BIS004R	BIS L-300-S115	142
BIS004T	BIS L-301-S115	145
BIS004U	BIS L-302-S115	148
BIS004Y	BIS L-303-S115	147
BIS004Z	BIS L-304-S115	150
BIS0051	BIS L-350-S115	153
BIS0053	BIS M-300-001-S115	62
BIS0054	BIS M-300-003-S115	62
BIS0055	BIS M-301-001-S115	69
BIS0056	BIS M-301-003-S115	69
BIS0057	BIS M-302-001-S115	59
BIS0059	BIS M-302-003-S115	59
BIS005A	BIS M-304-001-S115	61
BIS005C	BIS M-351-001-S115	71
BIS005F	BIS S-301-S115	245
BIS005R	BIS S-302-S115	245

Index sorted by order code

Order Code	Part Description	Page
BIS005T	BIS S-303-S115	245
BIS005Z	BIS C-300-PU1-05	194
BIS0066	BIS C-305-PU1-01	196
BIS0067	BIS C-305-PU1-05	196
BIS0068	BIS C-305-PU1-10	196
BIS006F	BIS C-306-PU1-05	194
BIS006Y	BIS C-315/05-S4	202
BIS006Z	BIS C-315/10-S4	202
BIS0075	BIS C-318-PU1-05	205
BIS0077	BIS C-319-PU1-01	197
BIS0078	BIS C-319-PU1-05	197
BIS0079	BIS C-319-PU1-10	197
BIS007A	BIS C-319/05-S4	200
BIS007C	BIS C-319/10-S4	200
BIS007J	BIS C-323/01-S4	201
BIS007K	BIS C-323/05-S4	201
BIS007L	BIS C-323/10-S4	201
BIS007M	BIS C-324/05-S4	203
BIS007N	BIS C-324/10-S4	203
BIS007P	BIS C-325/01-S4	200
BIS007R	BIS C-325/05-S4	200
BIS007T	BIS C-325/10-S4	200
BIS007Y	BIS C-326-PU1-05	197
BIS007Z	BIS C-326-PU1-10	197
BIS0080	BIS C-327-05	204
BIS0081	BIS C-328/05-S49	204
BIS0086	BIS C-350-00,3	207
BIS008E	BIS C-355/05-S92	207
BIS008P	BIS M-304-003-S115	61
BIS008U	BIS C-600-007-650-00-KL1	214
BIS008W	BIS C-600-007-650-02-KL1	214
BIS0092	BIS C-600-007-670-00-KL1	215
BIS0099	BIS C-6002-019-650-03-KL2	216
BIS009A	BIS C-6002-019-650-03-ST11	216
BIS009F	BIS C-6002-019-654-03-ST11	217
BIS009H	BIS C-6002-019-655-03-KL2	217
BIS009J	BIS C-6002-019-655-03-ST11	217
BIS009K	BIS C-6002-019-670-03-KL2	217
BIS009L	BIS C-6002-028-650-03-KL2	216
BIS009M	BIS C-6002-028-650-03-ST11	216
BIS009N	BIS C-6003-025-650-03-ST12	220
BIS009R	BIS C-6003-025-655-03-ST12	221
BIS009T	BIS C-6003-025-670-03-ST12	221
BIS00AL	BIS C-6022-019-050-03-ST10	219
BIS00AM	BIS C-6022-019-050-03-ST14	219
BIS00AP	BIS C-6022-028-050-03-ST10	219
BIS00AR	BIS C-6022-028-050-03-ST14	219
BIS00AT	BIS C-6023-025-050-03-ST13	223
BIS00AU	BIS C-6026-034-050-06-ST19	224
BIS00AY	BIS C-6027-039-050-06-ST19	225
BIS00AZ	BIS C-620-007-050-00-ST2	215
BIS00C5	BIS L-400-035-001-00-S115	158
BIS00C6	BIS L-400-035-001-02-S115	158
BIS00C7	BIS L-400-035-002-00-S115	159
BIS00C8	BIS L-400-035-002-02-S115	159
BIS00C9	BIS L-400-035-003-00-S115	159
BIS00CA	BIS L-400-035-003-02-S115	159
BIS00CC	BIS L-400-035-004-00-S115	159
BIS00CH	BIS L-400-043-001-02-S115	162
BIS00CJ	BIS L-400-043-002-02-S115	163
BIS00CK	BIS L-400-043-003-02-S115	163
BIS00CL	BIS L-400-043-004-02-S115	163
BIS00CM	BIS L-405-033-001-05-MU	156
BIS00CN	BIS L-405-033-002-05-MU	157
BIS00CP	BIS L-405-033-003-05-MU	157
BIS00CR	BIS L-405-033-004-05-MU	157
BIS00CT	BIS L-405-037-001-05-MU	156
BIS00CU	BIS L-405-037-002-05-MU	157
BIS00CW	BIS L-405-037-003-05-MU	157
BIS00CY	BIS L-405-037-004-05-MU	157
BIS00CZ	BIS L-409-045-001-07-S4	160
BIS00E0	BIS L-409-045-002-07-S4	161
BIS00E1	BIS L-409-045-003-07-S4	161
BIS00E2	BIS L-409-045-004-07-S4	161
BIS00E3	BIS L-6000-007-050-00-ST15	165
BIS00E6	BIS L-6002-019-050-03-ST11	167
BIS00E7	BIS L-6003-025-050-03-ST12	169
BIS00E8	BIS L-6020-007-050-00-ST15	165
BIS00EC	BIS L-6022-019-050-03-ST14	167
BIS00EE	BIS L-6023-025-050-03-ST13	169
BIS00EF	BIS L-6026-034-050-06-ST19	170
BIS00EH	BIS L-6027-039-050-06-ST19	171
BIS00EJ	BIS M-400-007-001-00-S115	65
BIS00EK	BIS M-400-007-002-00-S115	67
BIS00EM	BIS M-401-007-001-00-S115	75
BIS00EN	BIS M-402-007-002-00-S115	88
BIS00EP	BIS M-407-039-003-06-S115	111
BIS00ER	BIS M-451-007-001-00-S115	77
BIS00EW	BIS M-6002-019-050-03-ST11	107
BIS00EY	BIS M-6003-025-050-03-ST12	109
BIS00F0	BIS M-6022-019-050-03-ST14	107
BIS00F1	BIS M-6023-025-050-03-ST13	109
BIS00F2	BIS M-6026-034-050-06-ST19	110
BIS00F3	BIS S-6002-019-050-03-ST11	247
BIS00F4	BIS S-6003-025-050-03-ST12	249
BIS00F5	BIS S-6022-019-050-03-ST14	247
BIS00F6	BIS S-6023-025-050-03-ST13	249
BIS00F7	BIS S-6026-034-050-06-ST19	250
BIS00F8	BIS S-6027-039-050-06-ST19	251
BIS00H6	BIS C-60R-001-08P-PU-05	210
BIS00H7	BIS C-60R-001-08P-PU-10	210
BIS00H8	BIS C-60R-001-08P-PU-20	210
BIS00HC	BIS C-60R-002-08P-PU-05	210
BIS00HE	BIS C-60R-002-08P-PU-10	210
BIS00HH	BIS C-60R-003-08P-PU-05	210
BIS00HJ	BIS C-60R-003-08P-PU-10	210
BIS00HL	BIS C-61R-001-08P-PU-05	211
BIS00HM	BIS M-688-001	114
BIS00J0	BIS M-6000-007-050-00-ST24	105
BIS00J1	BIS C-140-11/L-M8	193
BIS00J2	BIS C-140-05/L-M8	193
BIS00J3	BIS C-140-11/L-M6	193
BIS00J4	BIS C-140-05/L-M6	193
BIS00JE	BIS C-380-05/06-02	209
BIS00JJ	BIS C-380-06/06-01	208
BIS00JM	BIS C-380-06/10-02	209
BIS00JN	BIS C-380-06/10-05	209
BIS00JP	BIS C-380-10/10-01	209
BIS00JR	BIS C-380-10/10-05	209
BIS00JT	BIS L-380-02/BU-PU1-00,15	155
BIS00JU	BIS L-380-02/BU-PU1-00,5	155
BIS00JW	BIS L-380-05/BU-PU1-00,15	155
BIS00JY	BIS L-380-05/BU-PU1-00,5	155
BIS00JZ	BIS L-380-10/BU-PU1-00,5	155
BIS00K1	BIS L-380-ST/10	154
BIS00K3	BIS C-6008-048-650-06-ST23	226
BIS00K4	BIS C-6028-048-050-06-ST22	227
BIS00KJ	BIS L-244-03/I	140
BIS00KK	BIS L-245-03/L	140
BIS00KM	BIS M-115-03/A	47
BIS00KU	BIS M-351-003-S115	71
BIS00KW	BIS C-620-007-050-02-ST2	215
BIS00KZ	BIS M-6028-048-050-06-ST22	113
BIS00L4	BIS C-318-PU1-10	205
BIS00L7	BIS M-6008-048-050-06-ST23	112
BIS00LC	BIS M-107-03/L-H200	57
BIS00LH	BIS M-400-045-001-07-S4	65
BIS00LJ	BIS M-400-045-002-07-S4	67
BIS00LK	BIS M-401-045-001-07-S4	75
BIS00LM	BIS M-451-045-001-07-S4	77
BIS00LU	BIS C-380-06/06-02	208
BIS00LW	BIS M-402-045-002-07-S4	88
BIS00LY	BIS M-699-052-050-03-ST11	115
BIS00LZ	BIS M-350-001-S115	91
BIS00M1	BIS M-402-045-004-07-S4	89
BIS00M2	BIS M-152-03/A	48
BIS00M6	BIS M-341-001-S115	73
BIS00M7	BIS U-6020-053-104-00-ST26	27
BIS00M8	BIS M-140-02/A-M8	53
BIS00M9	BIS M-140-02/A-M6	53
BIS00N1	BIS M-6000-007-050-00-ST15	105
BIS00N6	BIS M-340-001-S115	91
BIS00N7	BIS C-6005-027-650-05-ST4	213
BIS00N8	BIS C-380-05/06-05	209
BIS00N9	BIS C-380-06/06-05	208
BIS00NA	BIS U-6027-054-104-06-ST27	27
BIS00NK	BIS M-305-001-S115	83
BIS00NL	BIS U-100-01/CA	20
BIS00NW	BIS M-143-02/A-M8	51
BIS00NY	BIS M-352-001-S115	82
BIS00NZ	BIS M-191-02/A	49
BIS00P0	BIS U-301-C0-TNCB	22

Index sorted by order code

Order Code	Part Description	Page
BIS00P1	BIS M-154-03/A	49
BIS00P2	BIS M-307-001-S115	83
BIS00P3	BIS M-153-02/A	55
BIS00P5	BIS C-300-PU1-01	194
BIS00P6	BIS C-300-PU1-10	194
BIS00P9	BIS C-302-PU1-10	195
BIS00PA	BIS C-302-PU1-05	195
BIS00PC	BIS C-306-PU1-01	194
BIS00PE	BIS C-306-PU1-10	194
BIS00PF	BIS C-310-PU1-01	199
BIS00PH	BIS C-310-PU1-05	199
BIS00PJ	BIS C-310-PU1-10	199
BIS00PK	BIS C-315-PU1-01	198
BIS00PL	BIS C-315-PU1-05	198
BIS00PM	BIS C-315-PU1-10	198
BIS00PN	BIS C-351-PU1-05	205
BIS00PP	BIS C-351-PU1-10	205
BIS00PT	BIS M-142-02/A-M6-GY	51
BIS00PU	BIS M-142-02/A-M8-GY	51
BIS00PZ	BIS M-440-039-001-06-ST2	93
BIS00R0	BIS M-450-039-001-06-ST2	93
BIS00R1	BIS U-6027-060-114-06-ST27	27
BIS00R2	BIS U-6020-059-114-00-ST26	27
BIS00R3	BIS M-341-003-S115	73
BIS00R4	BIS M-144-02/A-M6-GY	53
BIS00R5	BIS M-144-02/A-M8-GY	53
BIS00RC	BIS U-100-02/CA	20
BIS00RF	BIS VM-300-001-S4	62
BIS00RN	BIS L-306-S115	151
BIS00RU	BIS M-402-007-004-00-S115	89
BIS00RY	BIS M-688-002	114
BIS00RZ	BIS M-115-03/A-SA2	47
BIS00T0	BIS VM-301-001-S4	69
BIS00T1	BIS M-122-02/A-SA2	50
BIS00T2	BIS VM-351-001-S4	71
BIS00T3	BIS V-6102-019-C001	117,173,303
BIS00T6	BIS VM-352-001-S4	87
BIS00T7	BIS VM-306-001-S4	85
BIS00T8	BIS VM-307-001-S4	85
BIS00T9	BIS VM-305-001-S4	87
BIS00TA	BIS VM-341-001-S4	73
BIS00TC	BIS C-60R-002-08P-PU-20	210
BIS00TU	BIS C-6028-048-050-06-ST28	227
BIS00TW	BIS M-6028-048-050-06-ST28	113
BIS00TY	BIS U-301-C1-TNCB	23
BIS00TZ	BIS U-302-C0-TNCB	23
BIS00U0	BIS U-302-C1-TNCB	23
BIS00U6	BIS VL-301-001-S4	145
BIS00U9	BIS V-6110-063-C002	117, 173
BIS00UC	BIS M-116-03/A	39
BIS00UE	BIS M-116-08/A	39
BIS00UF	BIS VL-302-001-S4	148
BIS00UH	BIS VL-304-001-S4	150
BIS00UJ	BIS VL-306-001-S4	151

Order Code	Part Description	Page
BIS00UK	BIS VL-350-001-S4	153
BIS00UL	BIS VL-300-001-S4	142
BIS00UM	BIS U-6020-059-134-00-ST26	27
BIS00UN	BIS U-6027-060-134-06-ST27	27
BIS00UY	BIS M-402-045-005-07-S4-SA1	89
BIS00W1	BIS M-410-067-001-04-S92	79
BIS00W2	BIS M-410-068-001-00-S115	79
BIS00W3	BIS M-410-068-001-02-S115	79
BIS00W4	BIS M-410-068-001-09-S72	79
BIS00W5	BIS M-411-067-001-04-S92	81
BIS00W6	BIS M-411-068-001-00-S115	81
BIS00W7	BIS M-411-068-001-02-S115	81
BIS00W8	BIS M-411-068-001-09-S72	81
BIS00W9	BIS M-136-03/L	46
BIS00WC	BIS U-102-05/CA-HT	21
BIS00WE	BIS U-102-05/CA	21
BIS00WF	BIS U-101-04/CA-HT	21
BIS00WH	BIS U-101-04/CA	21
BIS00WJ	BIS M-500-PVC-07-A01/02	96
BIS00WK	BIS M-373-000-A01	103
BIS00WL	BIS M-372-000-A01	101
BIS00WM	BIS M-371-000-A01	99
BIS00WN	BIS M-370-000-A02	97
BIS00Y1	BIS M-136-03/L-HT	57
BIS00Y2	BIS M-135-07/L-HT	57
BIS00Y3	BIS M-135-07/L	45
BIS00Y4	BIS M-135-03/L-HT	57
BIS00Y5	BIS M-135-03/L	45
BIS00Y6	BIS M-135-02/L	45
BIS00Y7	BIS M-134-10/L-HT	56
BIS00Y9	BIS M-133-02/A	41
BIS00YA	BIS M-132-10/L-HT	56
BIS00YC	BIS M-132-10/L	41
BIS00YE	BIS M-132-03/L-HT	56
BIS00YF	BIS M-132-03/L	40
BIS00YK	BIS M-130-07/L	39
BIS00YL	BIS M-130-03/L	39
BIS00YY	BIS U-626-069-111-06-ST32	25
BIS00Z0	BIS U-626-069-101-06-ST32	25
BIS00Z2	BIS U-620-068-111-00-ST29	25
BIS00Z4	BIS U-620-068-101-00-ST29	25
BIS00Z6	BIS U-620-067-111-04-ST30	25
BIS00Z8	BIS U-620-067-101-04-ST30	25
BIS00ZA	BIS M-626-069-A01-06-ST32	95
BIS00ZH	BIS M-620-068-A01-00-ST29	95
BIS00ZK	BIS M-620-067-A01-04-ST30	95
BIS00ZU	BIS U-6028-048-104-06-ST28	27
BIS00ZW	BIS U-6028-048-114-06-ST28	27
BIS00ZY	BIS L-103-05/L-ZC1	179
BIS0102	BIS M-401-072-001-07-S4	75
BIS0103	BIS M-451-072-001-07-S4	77
BIS0104	BIS M-400-072-002-07-S4	67
BIS0105	BIS M-402-072-002-07-S4	88
BIS0106	BIS M-402-072-004-07-S4	89

Order Code	Part Description	Page
BIS0108	BIS M-400-072-001-07-S4	65
BIS010P	BIS V-6111-073-C003	117, 173
BIS010R	BIS M-153-20/A	55
BIS0111	BIS M-108-20/A	46
BIS0112	BIS M-156-20/A	55
BIS0117	BIS M-155-20/A	55
BIS0119	BIS M-142-20/A-M8-GY	51
BIS0122	BIS V-6106-034-C004	117, 173,
BNI		
BNI000F	BNI EIP-950-000-Z009	312
BNI0030	BNI PBS-504-001-K008	303
BNI003K	BNI PBS-502-001-Z001	302
BNI003P	BNI PBS-507-001-Z011	303
BNI0040	BNI CCL-502-100-Z001	303
BNI004A	BNI EIP-502-105-Z015	302
BNI004U	BNI PNT-502-105-Z015	302
BNI005A	BNI DNT-502-100-Z001	302
BNI005E	BNI TCP-951-000-E028	313
BNI005H	BNI PNT-508-105-Z015	302
BNI005R	BNI PBS-502-101-Z001	303
BNI0067	BNI TCP-952-000-E029	313
BNI006A	BNI EIP-508-105-Z015	302
BNI0077	BNI ECT-508-105-Z015	302
BVS		
BVS0001	BVS ID-3-001-E	265
BVS0003	BVS OI-3-001-E	267
BVS0004	BVS OI-3-002-E	267
BVS0005	BVS OI-3-003-E	267
BVS0006	BVS OI-3-004-E	267
BVS000C	BVS OI-3-006-E	267
BVS000E	BVS OI-3-005-E	267
BVS000T	BVS ID-3-003-E	265
BVS0012	BVS OI-3-103-E	267
BVS0013	BVS OI-3-105-E	267
BVS0014	BVS OI-3-101-E	267
BVS0019	BVS ID-3-101-E	265
BVS001A	BVS ID-3-103-E	265
BVS001C	BVS ID-3-105-E	265
BVS001F	BVS UR-3-105-E	269
BVS001H	BVS UR-3-101-E	269
BVS001J	BVS UR-3-103-E	269
BVS001L	BVS UR-3-005-E	269
BVS001M	BVS UR-3-001-E	269
BVS001N	BVS UR-3-003-E	269
BVS001R	BVS ID-3-005-E	265
SET		
SET0121	BAV BP-PH-00068-01	271
SET0122	BAV BP-PH-00069-01	271
SET0123	BAV BP-PH-00070-01	271
SET0128	BAV BP-PH-00076-01	271
SET0129	BAV BP-PH-00077-01	271

Index sorted by order code

Order Code	Part Description	Page
SET012A	BAV BP-PH-00078-01	271
SET012J	BAV BP-PH-00017-01	271
SET012K	BAV BP-PH-00018-01	271
SET012M	BAV BP-PH-00020-01	271
SET012N	BAV BP-PH-00021-01	271
SET012P	BAV BP-PH-00022-01	271
SET014R	BAV BP-PH-00092-01	271
SET014T	BAV BP-PH-00092-02	271
SET014U	BAV BP-PH-00092-03	271
SET014Y	BAV BP-PH-00092-05	271
SET014Z	BAV BP-PH-00092-06	271
SET0150	BAV BP-PH-00092-07	271

Index sorted by part number

Part Description	Order Code	Page
BAE		
BAE LX-VS-DR090	**BAE00AM**	348
BAE LX-VS-HI050	**BAE00KR**	337
BAE LX-VS-HI100	**BAE00FR**	337
BAE LX-VS-HI150	**BAE00KP**	338
BAE LX-VS-HI200	**BAE00JE**	339
BAE LX-VS-HR025	**BAE000E**	336
BAE LX-VS-HR050	**BAE000F**	336
BAE LX-VS-HR100	**BAE000H**	337
BAE LX-VS-HR100-E	**BAE00JF**	339
BAE LX-VS-HR150	**BAE00C5**	338
BAE LX-VS-HR200	**BAE00JC**	339
BAE LX-VS-LI085	**BAE00AT**	343
BAE LX-VS-LI170	**BAE00AY**	343
BAE LX-VS-LR085	**BAE00AP**	342
BAE LX-VS-LR170	**BAE00AZ**	342
BAE LX-VS-LW085	**BAE00AR**	343
BAE LX-VS-LW170	**BAE00AW**	343
BAE LX-VS-OR100	**BAE00JA**	347
BAE LX-VS-OR50	**BAE00J9**	347
BAE LX-VS-RI100	**BAE000K**	341
BAE LX-VS-RI100-S	**BAE00FN**	341
BAE LX-VS-RR100	**BAE000J**	340
BAE LX-VS-RR100-S	**BAE00FP**	340
BAE LX-VS-RW100	**BAE00AN**	341
BAE LX-VS-RW100-S	**BAE00FM**	341
BAE LX-VS-SI018	**BAE00H1**	345
BAE LX-VS-SI030	**BAE00H2**	345
BAE LX-VS-SR012	**BAE00KF**	344
BAE LX-VS-SR018	**BAE00H0**	345
BAE LX-VS-SR030	**BAE00FT**	345
BAE LX-XO-PL018-L1-S4	**BAE00KE**	349
BAE LX-XO-PL018-L2-S4	**BAE00KZ**	349
BAE PD-VS-002-E	**BAE00EH**	270
BAE PS-XA-1W-12-015-001	**BAE0036**	351
BAE PS-XA-1W-12-025-002	**BAE0039**	351
BAE PS-XA-1W-12-050-002	**BAE003E**	351
BAE PS-XA-1W-12-100-003	**BAE003H**	351
BAE PS-XA-1W-24-007-001	**BAE0001**	351
BAE PS-XA-1W-24-012-002	**BAE0004**	351
BAE PS-XA-1W-24-025-002	**BAE0005**	351
BAE PS-XA-1W-24-038-003	**BAE003J**	351
BAE PS-XA-1W-24-038-601	**BAE00EN**	353
BAE PS-XA-1W-24-038-602	**BAE00EP**	353
BAE PS-XA-1W-24-038-603	**BAE00ER**	353
BAE PS-XA-1W-24-038-607	**BAE00FW**	353
BAE PS-XA-1W-24-050-003	**BAE0006**	351
BAE PS-XA-1W-24-050-013	**BAE00EK**	353
BAE PS-XA-1W-24-080-604	**BAE00ET**	353
BAE PS-XA-1W-24-080-605	**BAE00FL**	353
BAE PS-XA-1W-24-080-606	**BAE00FY**	353
BAE PS-XA-1W-24-100-004	**BAE0002**	351
BAE PS-XA-1W-24-100-014	**BAE00EU**	353
BAE PS-XA-1W-24-200-005	**BAE0003**	351

Index sorted by part number

Part Description	Order Code	Page
BAE PS-XA-1W-48-025-003	**BAE003K**	351
BAE PS-XA-1W-48-050-004	**BAE003L**	351
BAE PS-XA-1W-48-100-005	**BAE003M**	351
BAE PS-XA-3Y-24-050-009	**BAE0007**	351
BAE PS-XA-3Y-24-100-006	**BAE0008**	351
BAE PS-XA-3Y-24-200-007	**BAE0009**	351
BAE PS-XA-3Y-24-400-010	**BAE003R**	351
BAM		
BAM FK-VS-002-03-1	**BAM0206**	332
BAM MB-XA-002-B02-1	**BAM01AE**	329
BAM MB-XA-003-B03-1	**BAM01AC**	329
BAM MB-XA-010-B07-4	**BAM01MY**	322
BAM MB-XA-012-B09-4	**BAM01UH**	322
BAM MC-XA-016-Q40-1	**BAM01TM**	320
BAM MC-XA-018-B04-4	**BAM01Y3**	322
BAM MC-XA-021-M18-2	**BAM01W4**	325
BAM MC-XA-021-M18-4	**BAM01WJ**	325
BAM MC-XA-021-M18-A	**BAM01WL**	325
BAM MC-XA-021-M30-2	**BAM01W5**	325
BAM MC-XA-021-M30-4	**BAM01WK**	325
BAM MC-XA-021-M30-A	**BAM01WM**	325
BAM OF-VS-001-D-RX100	**BAM01A7**	340
BAM PC-AE-002-1	**BAM01A8**	332
BAM PC-AM-010-4	**BAM01Y8**	322
BAM PC-VS-008-1	**BAM01RR**	333
BAV		
BAV BP-PH-00017-01	**SET012J**	271
BAV BP-PH-00018-01	**SET012K**	271
BAV BP-PH-00020-01	**SET012M**	271
BAV BP-PH-00021-01	**SET012N**	271
BAV BP-PH-00022-01	**SET012P**	271
BAV BP-PH-00068-01	**SET0121**	271
BAV BP-PH-00069-01	**SET0122**	271
BAV BP-PH-00070-01	**SET0123**	271
BAV BP-PH-00076-01	**SET0128**	271
BAV BP-PH-00077-01	**SET0129**	271
BAV BP-PH-00078-01	**SET012A**	271
BAV BP-PH-00092-01	**SET014R**	271
BAV BP-PH-00092-02	**SET014T**	271
BAV BP-PH-00092-03	**SET014U**	271
BAV BP-PH-00092-05	**SET014Y**	271
BAV BP-PH-00092-06	**SET014Z**	271
BAV BP-PH-00092-07	**SET0150**	271
BCC		
BCC 0000-0000-00-000-PS72N1-10X	**BCC0ACA**	291
BCC A313-0000-10-071-VX43W6-_ _ _		306
BCC A313-0000-20-071-VX43W6-_ _ _		307
BCC A314-0000-10-003-_X44W6-_ _ _		306
BCC A314-0000-10-072-VX44W6-_ _ _		306
BCC A314-0000-20-003-_X44W6-_ _ _		307
BCC A314-0000-20-072-VX44W6-_ _ _		307
BCC A315-0000-10-030-VS85N4-_ _ _		305
BCC A315-0000-10-063-VX45W6-_ _ _		306
BCC A315-0000-20-063-VX45W6-_ _ _		307
BCC A315-A315-30-330-VS85N4-_ _ _		305
BCC A315-A315-30-335-VX45W6-_ _ _		308
BCC A315-A325-30-335-VX45W6-_ _ _		309
BCC A323-0000-10-071-VX43W6-_ _ _		306
BCC A323-0000-20-071-VX43W6-_ _ _		307
BCC A324-0000-10-003-_X44W6-_ _ _		306
BCC A324-0000-10-072-VX44W6-_ _ _		306
BCC A324-0000-20-003-_X44W6-_ _ _		307
BCC A324-0000-20-072-VX44W6-_ _ _		307
BCC A325-0000-10-063-VX45W6-_ _ _		306
BCC A325-0000-20-063-VX45W6-_ _ _		307
BCC A325-A315-30-335-VX45W6-_ _ _		309
BCC A325-A325-30-335-VX45W6-_ _ _		309
BCC A334-0000-20-000-51X4A5-000	**BCC0709**	306
BCC E818-E818-N0-RA095-000	**BCC0F2R**	292
BCC E878-0000-Z1-41X8T4	**BCC09N2**	317
BCC M313-0000-10-001-PX0334-020	**BCC02M8**	311
BCC M313-0000-10-001-PX0334-050	**BCC02M9**	311
BCC M313-0000-10-001-PX0334-100	**BCC02MA**	311
BCC M313-0000-10-001-VX8334-020	**BCC02NU**	311
BCC M313-0000-10-001-VX8334-050	**BCC02NW**	311
BCC M313-0000-10-001-VX8334-100	**BCC02NY**	311
BCC M414-0000-2A-068-VS24N7-_ _ _		299
BCC M414-E894-8G-672-ES64N9-_ _ _		293
BCC M414-M414-6D-338-ES64N9-_ _ _		293
BCC M415-0000-1A-003-PX0434-020	**BCC032F**	311
BCC M415-0000-1A-003-PX0434-050	**BCC032H**	311
BCC M415-0000-1A-003-PX0434-100	**BCC032J**	311
BCC M415-0000-1A-003-VX8434-020	**BCC0367**	311
BCC M415-0000-1A-003-VX8434-050	**BCC0368**	311
BCC M415-0000-1A-003-VX8434-100	**BCC0369**	311
BCC M415-0000-1A-014-PS0434-_ _ _		280, 301
BCC M415-0000-1A-068-VS24N7-_ _ _		298
BCC M415-0000-2A-R03	**BCC06Y4**	299
BCC M415-0000-2B-R01	**BCC0718**	291
BCC M415-0000-2B-R02	**BCC0719**	291
BCC M415-E834-AG-672-ES64N8-050	**BCC0E7T**	310
BCC M415-E834-AG-672-ES64N8-150	**BCC0E7W**	310
BCC M415-M412-3B-329-PS72N1-_ _ _		291
BCC M415-M414-3A-304-_X44T2-_ _ _		300
BCC M415-M414-3A-305-PS0434-_ _ _		300
BCC M415-M414-3A-337-VS24N7-_ _ _		299
BCC M415-M415-5D-687-ES64N8-020		311
BCC M415-M415-5D-687-ES64N8-050	**BCC0ANC**	311
BCC M415-M415-M415-U0007-000	**BCC08CA**	299
BCC M415-M424-3A-304-_X44T2-_ _ _		301
BCC M415-U024-8F-696-VX04T8-018	**BCC0CR2**	281
BCC M418-0000-1A-046-PS0825-020	**BCC0994**	310
BCC M418-0000-1A-046-PS0825-050	**BCC0995**	310
BCC M418-0000-1A-046-PS0825-100	**BCC0996**	310
BCC M418-0000-1A-046-PS0825-200	**BCC09HL**	310
BCC M418-0000-1A-046-PS0825-400	**BCC0AT8**	310
BCC M425-0000-1A-014-PS0434-_ _ _		281, 301
BCC M425-M414-3A-304-_X44T2-_ _ _		300
BCC M425-M414-3A-304-PX0434-_ _ _		277
BCC M425-M424-3A-304-_X44T2-_ _ _		301
BCC M425-M424-3A-304-PX0434-_ _ _		277
BCC M434-0000-2A-000-51X475-000	**BCC06F7**	298
BCC M435-0000-1A-000-51X475-000	**BCC06F6**	298
BCC M438-0000-1A-000-51X850-000	**BCC0A03**	283
BCC M474-0000-1D-000-51X475-000	**BCC03Y1**	293
BCC M474-0000-2A-000-01X475-000	**BCC0869**	281, 301
BCC M474-0000-2D-000-51X475-000	**BCC03WZ**	292
BCC M475-0000-1A-000-01X575-000	**BCC06ZN**	306
BCC M475-0000-1B-000-01X575-000	**BCC0715**	290
BCC M475-0000-2B-000-01X575-000	**BCC0714**	290
BCC M478-0000-1A-000-43X834-000	**BCC04MC**	282
BCC M485-0000-1B-000-01X575-000	**BCC0717**	290
BCC M485-0000-2B-000-01X575-000	**BCC0716**	290
BCC M488-0000-1A-000-43X834-000	**BCC04ME**	283
BCC-M415-M414-3A-304-PX0434-_ _ _		276
BCC-M415-M414-3A-305-PS0434-_ _ _		278
BCC-M415-M424-3A-304-PX0434-_ _ _		276
BCC-M415-M424-3A-305-PS0434-_ _ _		278
BCC-M425-M414-3A-305-PS0434-_ _ _		279
BCC-M425-M424-3A-305-PS0434-_ _ _		279
BDN		
BDN C-_ _ _-AC-EDD-01-_ _ _M		297
BDN C-_ _ _-AD-EDD-01-_ _ _M		297
BDN C-_ _ _-BC-EDD-01-_ _ _M		297
BDN C-D11-AC-EDD-01-_ _ _M		304
BDN C-D11-CN-EDN-01-030M	**BCC075U**	304
BDN C-F01-AN-NAN-01	**BCC07A9**	294
BDN C-F01-CN-NAN-01	**BCC07AA**	294
BDN C-F11-AN-NDN-01	**BCC07AC**	296
BDN C-F11-CN-NDN-01	**BCC07AE**	296, 305
BDN C-R00-FE-NDD-01	**BCC07J5**	298
BDN R-AED-01	**BCC07YE**	297
BDN R-CEA-01	**BCC07Y9**	294, 304
BDN R-CED-01	**BCC07YC**	297, 305
BDN T-DTE-AA-01	**BCC07WP**	295
BDN T-DTE-AD-01	**BCC07WZ**	304
BDN T-DTN-DD-01	**BCC07WR**	296, 299
BES		
BES 14,5-BS-1	**BAM00EM**	324
BES 16,0-BS-1	**BAM00ET**	324
BES 18,0-BS-1	**BAM00F2**	324
BES 18,0-KB-3	**BAM00F7**	323
BES 18,0-KB-3-F-SA1	**BAM00F9**	323
BES 18.0-KH-2S	**BAM00FT**	324
BES 18-HW-1	**BAM00EY**	323
BES 30,0-BS-1	**BAM00HN**	324
BES 30,0-KB-3-F	**BAM00HU**	323

Index sorted by part number

Part Description	Order Code	Page
BES 30,0-KH-2L	**BAM00J4**	324
BES 30,0-KH-2S	**BAM00J6**	324
BES 30-HW-1	**BAM00HH**	323
BES HS-01-P1-C16/Q40	**BAM00JT**	321
BES HS-01-P1-C8/Q40	**BAM00JU**	321
BES Q40-HW-1	**BAM00JW**	320
BIS		
BIS C-100-05/A	**BIS0002**	189
BIS C-103-05/A	**BIS0004**	188
BIS C-104-11/A	**BIS0006**	190
BIS C-104-32/A	**BIS0007**	190
BIS C-105-05/A	**BIS0009**	188
BIS C-108-05/L	**BIS000C**	190
BIS C-108-05/L-SA2	**BIS000F**	192
BIS C-108-11/L	**BIS000H**	190
BIS C-108-11/L-SA2	**BIS000J**	192
BIS C-108-32/L	**BIS000K**	190
BIS C-117-05/A	**BIS000M**	189
BIS C-117-05/L	**BIS000N**	189
BIS C-117-11/L	**BIS000R**	189
BIS C-121-04/L	**BIS000T**	188
BIS C-121-04/L-SA1	**BIS000W**	192
BIS C-122-04/L	**BIS0011**	188
BIS C-122-04/L-ZC1	**BIS002Y**	239
BIS C-122-11/L	**BIS0015**	188
BIS C-127-05/L	**BIS0017**	190
BIS C-128-05/L	**BIS0019**	189
BIS C-128-11/L	**BIS001C**	189
BIS C-130-05/L	**BIS001E**	189
BIS C-130-05/L-SA1	**BIS001H**	192
BIS C-133-05/L	**BIS001Z**	193
BIS C-133-11/L		193
BIS C-134-05/L-H120	**BIS0020**	193
BIS C-134-11/L	**BIS0021**	193
BIS C-140-05/L-M6	**BIS00J4**	193
BIS C-140-05/L-M8	**BIS00J2**	193
BIS C-140-11/L-M6	**BIS00J3**	193
BIS C-140-11/L-M8	**BIS00J1**	193
BIS C-150-05/A	**BIS0028**	191
BIS C-150-11/A	**BIS002A**	191
BIS C-150-32/A	**BIS002E**	191
BIS C-190-05/L	**BIS002K**	191
BIS C-190-11/L	**BIS002M**	191
BIS C-190-32/L	**BIS002N**	191
BIS C-191-05/L	**BIS002P**	191
BIS C-191-11/L	**BIS002R**	191
BIS C-300-HG1	**BAM012A**	326
BIS C-300-PU1-01	**BIS00P5**	194
BIS C-300-PU1-05	**BIS005Z**	194
BIS C-300-PU1-10	**BIS00P6**	194
BIS C-300-ZA1	**BAM012C**	239
BIS C-302-PU1-05	**BIS00PA**	195
BIS C-302-PU1-10	**BIS00P9**	195
BIS C-305-PU1-01	**BIS0066**	196
BIS C-305-PU1-05	**BIS0067**	196
BIS C-305-PU1-10	**BIS0068**	196
BIS C-306-PU1-01	**BIS00PC**	194
BIS C-306-PU1-05	**BIS006F**	194
BIS C-306-PU1-10	**BIS00PE**	194
BIS C-310-PU1-01	**BIS00PF**	199
BIS C-310-PU1-05	**BIS00PH**	199
BIS C-310-PU1-10	**BIS00PJ**	199
BIS C-315/05-S4	**BIS006Y**	202
BIS C-315/10-S4	**BIS006Z**	202
BIS C-315-PU1-01	**BIS00PK**	198
BIS C-315-PU1-05	**BIS00PL**	198
BIS C-315-PU1-10	**BIS00PM**	198
BIS C-318-PU1-05	**BIS0075**	205
BIS C-318-PU1-10	**BIS00L4**	205
BIS C-319/01-S4		200
BIS C-319/05-S4	**BIS007A**	200
BIS C-319/10-S4	**BIS007C**	200
BIS C-319-PU1-01	**BIS0077**	197
BIS C-319-PU1-05	**BIS0078**	197
BIS C-319-PU1-10	**BIS0079**	197
BIS C-323/01-S4	**BIS007J**	201
BIS C-323/05-S4	**BIS007K**	201
BIS C-323/10-S4	**BIS007L**	201
BIS C-324/05-S4	**BIS007M**	203
BIS C-324/10-S4	**BIS007N**	203
BIS C-325/01-S4	**BIS007P**	200
BIS C-325/05-S4	**BIS007R**	200
BIS C-325/10-S4	**BIS007T**	200
BIS C-326-PU1-05	**BIS007Y**	197
BIS C-326-PU1-10	**BIS007Z**	197
BIS C-327-01		204
BIS C-327-05	**BIS0080**	204
BIS C-327-10		204
BIS C-328/01-S49		204
BIS C-328/05-S49	**BIS0081**	204
BIS C-328/10-S49		204
BIS C-350-00,3	**BIS0086**	207
BIS C-351-PU1-05	**BIS00PN**	205
BIS C-351-PU1-10	**BIS00PP**	205
BIS C-355/05-S92	**BIS008E**	207
BIS C-380-05/06-02	**BIS00JE**	209
BIS C-380-05/06-05	**BIS00N8**	209
BIS C-380-06/06-01	**BIS00JJ**	208
BIS C-380-06/06-02	**BIS00LU**	208
BIS C-380-06/06-05	**BIS00N9**	208
BIS C-380-06/10-02	**BIS00JM**	209
BIS C-380-06/10-05	**BIS00JN**	209
BIS C-380-10/10-01	**BIS00JP**	209
BIS C-380-10/10-05	**BIS00JR**	209
BIS C-505-PU-_ _		286
BIS C-505-PU1-_ _		286
BIS C-506-PU-_ _		286
BIS C-506-PU1-_ _		286
BIS C-516-PU-_ _		289
BIS C-517-PVC-_ _		286
BIS C-518-PVC-_ _		286
BIS C-520-PVC-05	**BCC00PJ**	287
BIS C-521-PVC-02	**BCC00PK**	287
BIS C-522-PVC-02	**BCC00PL**	287
BIS C-523-PU1-05	**BCC00PP**	287
BIS C-524-PVC-01,5	**BCC00PR**	287
BIS C-600-007-650-00-KL1	**BIS008U**	214
BIS C-600-007-650-02-KL1	**BIS008W**	214
BIS C-600-007-654-00-KL1		215
BIS C-600-007-670-00-KL1	**BIS0092**	215
BIS C-6002-019-650-03-KL2	**BIS0099**	216
BIS C-6002-019-650-03-ST11	**BIS009A**	216
BIS C-6002-019-654-03-ST11	**BIS009F**	217
BIS C-6002-019-655-03-KL2	**BIS009H**	217
BIS C-6002-019-655-03-ST11	**BIS009J**	217
BIS C-6002-019-670-03-KL2	**BIS009K**	217
BIS C-6002-028-650-03-KL2	**BIS009L**	216
BIS C-6002-028-650-03-ST11	**BIS009M**	216
BIS C-6003-025-650-03-ST12	**BIS009N**	220
BIS C-6003-025-654-03-ST12		221
BIS C-6003-025-655-03-ST12	**BIS009R**	221
BIS C-6003-025-670-03-ST12	**BIS009T**	221
BIS C-6005-027-650-05-ST4	**BIS00N7**	213
BIS C-6008-048-650-06-ST23	**BIS00K3**	226
BIS C-6022-019-050-03-ST10	**BIS00AL**	219
BIS C-6022-019-050-03-ST14	**BIS00AM**	219
BIS C-6022-028-050-03-ST10	**BIS00AP**	219
BIS C-6022-028-050-03-ST14	**BIS00AR**	219
BIS C-6023-025-050-03-ST13	**BIS00AT**	223
BIS C-6026-034-050-06-ST19	**BIS00AU**	224
BIS C-6027-039-050-06-ST19	**BIS00AY**	225
BIS C-6028-048-050-06-ST22	**BIS00K4**	227
BIS C-6028-048-050-06-ST28	**BIS00TU**	227
BIS C-60R-001-08P-PU-05	**BIS00H6**	210
BIS C-60R-001-08P-PU-10	**BIS00H7**	210
BIS C-60R-001-08P-PU-20	**BIS00H8**	210
BIS C-60R-002-08P-PU-05	**BIS00HC**	210
BIS C-60R-002-08P-PU-10	**BIS00HE**	210
BIS C-60R-002-08P-PU-20	**BIS00TC**	210
BIS C-60R-003-08P-PU-05	**BIS00HH**	210
BIS C-60R-003-08P-PU-10	**BIS00HJ**	210
BIS C-61R-001-08P-PU-05	**BIS00HL**	211
BIS C-620-007-050-00-ST2	**BIS00AZ**	215
BIS C-620-007-050-02-ST2	**BIS00KW**	215
BIS C-703-A	**BAE0049**	326
BIS C-720-01-03	**BAE004C**	238
BIS C-810-0-003	**BAE0088**	237
BIS C-820-0-004-D	**BAE008C**	237
BIS C-850	**BAE0094**	236
BIS C-851	**BAE0095**	236
BIS C-852	**BAE0096**	236

Index sorted by part number

Part Description	Order Code	Page
BIS C-853	**BAE0097**	236
BIS C-870-1-008-000-3001		231
BIS C-870-1-008-000-3002		233
BIS C-870-1-008-001-3001		231
BIS C-870-1-008-001-3002		233
BIS C-870-1-008-002-3001		231
BIS C-870-1-008-002-3002		233
BIS C-870-1-008-003-3001		231
BIS C-870-1-008-003-3002		233
BIS C-870-1-008-004-3001		231
BIS C-870-1-008-004-3002		233
BIS C-870-1-008-005-3001		231
BIS C-870-1-008-005-3002		233
BIS C-870-1-008-X-000-3000	**BAE00HW**	229
BIS C-870-1-008-X-001-3000	**BAE00KW**	229
BIS C-870-1-008-X-002-3000		229
BIS C-870-1-008-X-003-3000		229
BIS C-870-1-008-X-004-3000		229
BIS C-870-1-008-X-005-3000		229
BIS C-871-1-008-000-3001		231
BIS C-871-1-008-000-3002		233
BIS C-871-1-008-001-3001		231
BIS C-871-1-008-001-3002		233
BIS C-871-1-008-002-3001		231
BIS C-871-1-008-002-3002		233
BIS C-871-1-008-003-3001		231
BIS C-871-1-008-003-3002		233
BIS C-871-1-008-004-3001		231
BIS C-871-1-008-004-3002		233
BIS C-871-1-008-005-3001		231
BIS C-871-1-008-005-3002		233
BIS C-871-1-008-X-000-3000		229
BIS C-871-1-008-X-001-3000		229
BIS C-871-1-008-X-002-3000		229
BIS C-871-1-008-X-003-3000		229
BIS C-871-1-008-X-004-3000		229
BIS C-871-1-008-X-005-3000		229
BIS C-873-1-008-000-3001		231
BIS C-873-1-008-000-3002		233
BIS C-873-1-008-001-3001		231
BIS C-873-1-008-001-3002		233
BIS C-873-1-008-002-3001		231
BIS C-873-1-008-002-3002		233
BIS C-873-1-008-003-3001		231
BIS C-873-1-008-003-3002	**BAE00J5**	233
BIS C-873-1-008-004-3001		231
BIS C-873-1-008-004-3002		233
BIS C-873-1-008-005-3001		231
BIS C-873-1-008-005-3002	**BAE00KT**	233
BIS C-873-1-008-X-000-3000	**BAE00KY**	229
BIS C-873-1-008-X-001-3000		229
BIS C-873-1-008-X-002-3000		229
BIS C-873-1-008-X-003-3000		229
BIS C-873-1-008-X-004-3000		229

Part Description	Order Code	Page
BIS C-873-1-008-X-005-3000		229
BIS L-100-01/L	**BIS0033**	138
BIS L-100-05/L-RO	**BIS0035**	141
BIS L-101-01/L	**BIS0036**	139
BIS L-101-05/L-RO	**BIS0038**	141
BIS L-102-01/L	**BIS0039**	139
BIS L-102-05/L-RO	**BIS003C**	141
BIS L-103-05/L	**BIS003E**	139
BIS L-103-05/L-RO	**BIS003F**	141
BIS L-103-05/L-ZC1	**BIS00ZY**	179
BIS L-150-05/A	**BIS003N**	139
BIS L-200-03/L	**BIS003R**	141
BIS L-201-03/L	**BIS003T**	141
BIS L-202-03/L	**BIS003U**	141
BIS L-203-03/L	**BIS003W**	141
BIS L-203-ZH1	**BAM012H**	179
BIS L-244-03/I	**BIS00KJ**	140
BIS L-245-03/L	**BIS00KK**	140
BIS L-300-S115	**BIS004R**	142
BIS L-301-S115	**BIS004T**	145
BIS L-302-S115	**BIS004U**	148
BIS L-303-S115	**BIS004Y**	147
BIS L-304-S115	**BIS004Z**	150
BIS L-306-S115	**BIS00RN**	151
BIS L-350-S115	**BIS0051**	153
BIS L-380-02/BU-PU1-00,15	**BIS00JT**	155
BIS L-380-02/BU-PU1-00,5	**BIS00JU**	155
BIS L-380-05/BU-PU1-00,15	**BIS00JW**	155
BIS L-380-05/BU-PU1-00,5	**BIS00JY**	155
BIS L-380-10/BU-PU1-00,5	**BIS00JZ**	155
BIS L-380-ST/10	**BIS00K1**	154
BIS L-400-035-001-00-S115	**BIS00C5**	158
BIS L-400-035-001-02-S115	**BIS00C6**	158
BIS L-400-035-002-00-S115	**BIS00C7**	159
BIS L-400-035-002-02-S115	**BIS00C8**	159
BIS L-400-035-003-00-S115	**BIS00C9**	159
BIS L-400-035-003-02-S115	**BIS00CA**	159
BIS L-400-035-004-00-S115	**BIS00CC**	159
BIS L-400-043-001-02-S115	**BIS00CH**	162
BIS L-400-043-002-02-S115	**BIS00CJ**	163
BIS L-400-043-003-02-S115	**BIS00CK**	163
BIS L-400-043-004-02-S115	**BIS00CL**	163
BIS L-405-033-001-05-MU	**BIS00CM**	156
BIS L-405-033-002-05-MU	**BIS00CN**	157
BIS L-405-033-003-05-MU	**BIS00CP**	157
BIS L-405-033-004-05-MU	**BIS00CR**	157
BIS L-405-037-001-05-MU	**BIS00CT**	156
BIS L-405-037-002-05-MU	**BIS00CU**	157
BIS L-405-037-003-05-MU	**BIS00CW**	157
BIS L-405-037-004-05-MU	**BIS00CY**	157
BIS L-409-045-001-07-S4	**BIS00CZ**	160
BIS L-409-045-002-07-S4	**BIS00E0**	161
BIS L-409-045-003-07-S4	**BIS00E1**	161
BIS L-409-045-004-07-S4	**BIS00E2**	161

Part Description	Order Code	Page
BIS L-503-PU1-05	**BCC00R2**	157
BIS L-503-PU1-10	**BCC00R3**	157
BIS L-503-PU1-15	**BCC00R4**	157
BIS L-503-PU1-20	**BCC00R5**	157
BIS L-6000-007-050-00-ST15	**BIS00E3**	165
BIS L-6002-019-050-03-ST11	**BIS00E6**	167
BIS L-6003-025-050-03-ST12	**BIS00E7**	169
BIS L-6020-007-050-00-ST15	**BIS00E8**	165
BIS L-6022-019-050-03-ST14	**BIS00EC**	167
BIS L-6023-025-050-03-ST13	**BIS00EE**	169
BIS L-6026-034-050-06-ST19	**BIS00EF**	170
BIS L-6027-039-050-06-ST19	**BIS00EH**	171
BIS L-870-1-008-X-001-3000		177
BIS L-870-1-008-X-002-3000		177
BIS L-870-1-008-X-003-3000		177
BIS L-870-1-008-X-004-3000		177
BIS L-870-1-008-X-005-3000		177
BIS M-101-01/L	**BIS003Y**	41
BIS M-102-01/L	**BIS003Z**	43
BIS M-105-01/A	**BIS0040**	38
BIS M-105-02/A	**BIS0042**	38
BIS M-107-03/L-H200	**BIS00LC**	57
BIS M-108-02/L	**BIS0043**	46
BIS M-108-20/A	**BIS0111**	46
BIS M-110-02/L	**BIS0044**	39
BIS M-111-02/L	**BIS0045**	41
BIS M-112-02/L	**BIS0046**	43
BIS M-115-03/A	**BIS00KM**	47
BIS M-115-03/A-SA2	**BIS00RZ**	47
BIS M-116-03/A	**BIS00UC**	39
BIS M-116-08/A	**BIS00UE**	39
BIS M-120-01/L	**BIS0047**	47
BIS M-122-01/A	**BIS0048**	38
BIS M-122-01/A-ZC1	**BIS0049**	49, 129
BIS M-122-02/A	**BIS004A**	38
BIS M-122-02/A-SA2	**BIS00T1**	50
BIS M-130-03/L	**BIS00YL**	39
BIS M-130-07/L	**BIS00YK**	39
BIS M-132-03/L	**BIS00YF**	40
BIS M-132-03/L-HT	**BIS00YE**	56
BIS M-132-10/L	**BIS00YC**	41
BIS M-132-10/L-HT	**BIS00YA**	56
BIS M-133-02/A	**BIS00Y9**	41
BIS M-134-10/L-HT	**BIS00Y7**	56
BIS M-135-02/L	**BIS00Y6**	45
BIS M-135-03/L	**BIS00Y5**	45
BIS M-135-03/L-HT	**BIS00Y4**	57
BIS M-135-07/L	**BIS00Y3**	45
BIS M-135-07/L-HT	**BIS00Y2**	57
BIS M-136-03/L	**BIS00W9**	46
BIS M-136-03/L-HT	**BIS00Y1**	57
BIS M-140-02/A-M6	**BIS00M9**	53
BIS M-140-02/A-M8	**BIS00M8**	53
BIS M-142-02/A-M6-GY	**BIS00PT**	51

Index sorted by part number

Part Description	Order Code	Page
BIS M-142-02/A-M8-GY	**BIS00PU**	51
BIS M-142-20/A-M8-GY	**BIS0119**	51
BIS M-143-02/A-M8	**BIS00NW**	51
BIS M-144-02/A-M6-GY	**BIS00R4**	53
BIS M-144-02/A-M8-GY	**BIS00R5**	53
BIS M-150-02/A	**BIS004F**	54
BIS M-151-02/A	**BIS004H**	54
BIS M-152-03/A	**BIS00M2**	48
BIS M-153-02/A	**BIS00P3**	55
BIS M-153-20/A	**BIS010R**	55
BIS M-154-03/A	**BIS00P1**	49
BIS M-155-20/A	**BIS0117**	55
BIS M-156-20/A	**BIS0112**	55
BIS M-191-02/A	**BIS00NZ**	49
BIS M-300-001-S115	**BIS0053**	62
BIS M-300-003-S115	**BIS0054**	62
BIS M-301-001-S115	**BIS0055**	69
BIS M-301-003-S115	**BIS0056**	69
BIS M-302-001-S115	**BIS0057**	59
BIS M-302-003-S115	**BIS0059**	59
BIS M-304-001-S115	**BIS005A**	61
BIS M-304-003-S115	**BIS008P**	61
BIS M-305-001-S115	**BIS00NK**	83
BIS M-307-001-S115	**BIS00P2**	83
BIS M-340-001-S115	**BIS00N6**	91
BIS M-341-001-S115	**BIS00M6**	73
BIS M-341-003-S115	**BIS00R3**	73
BIS M-350-001-S115	**BIS00LZ**	91
BIS M-351-001-S115	**BIS005C**	71
BIS M-351-003-S115	**BIS00KU**	71
BIS M-352-001-S115	**BIS00NY**	82
BIS M-370-000-A02	**BIS00WN**	97
BIS M-371-000-A01	**BIS00WM**	99
BIS M-372-000-A01	**BIS00WL**	101
BIS M-373-000-A01	**BIS00WK**	103
BIS M-400-007-001-00-S115	**BIS00EJ**	65
BIS M-400-007-002-00-S115	**BIS00EK**	67
BIS M-400-045-001-07-S4	**BIS00LH**	65
BIS M-400-045-002-07-S4	**BIS00LJ**	67
BIS M-400-072-001-07-S4	**BIS0108**	65
BIS M-400-072-002-07-S4	**BIS0104**	67
BIS M-401-007-001-00-S115	**BIS00EM**	75
BIS M-401-045-001-07-S4	**BIS00LK**	75
BIS M-401-072-001-07-S4	**BIS0102**	75
BIS M-402-007-002-00-S115	**BIS00EN**	88
BIS M-402-007-004-00-S115	**BIS00RU**	89
BIS M-402-045-002-07-S4	**BIS00LW**	88
BIS M-402-045-004-07-S4	**BIS00M1**	89
BIS M-402-045-005-07-S4-SA1	**BIS00UY**	89
BIS M-402-072-002-07-S4	**BIS0105**	88
BIS M-402-072-004-07-S4	**BIS0106**	89
BIS M-407-039-003-06-S115	**BIS00EP**	111
BIS M-410-067-001-04-S92	**BIS00W1**	79
BIS M-410-068-001-00-S115	**BIS00W2**	79
BIS M-410-068-001-02-S115	**BIS00W3**	79
BIS M-410-068-001-09-S72	**BIS00W4**	79
BIS M-411-067-001-04-S92	**BIS00W5**	81
BIS M-411-068-001-00-S115	**BIS00W6**	81
BIS M-411-068-001-02-S115	**BIS00W7**	81
BIS M-411-068-001-09-S72	**BIS00W8**	81
BIS M-440-039-001-06-ST2	**BIS00PZ**	93
BIS M-450-039-001-06-ST2	**BIS00R0**	93
BIS M-451-007-001-00-S115	**BIS00ER**	77
BIS M-451-045-001-07-S4	**BIS00LM**	77
BIS M-451-072-001-07-S4	**BIS0103**	77
BIS M-500-PVC-07-A01/02	**BIS00WJ**	96
BIS M-6000-007-050-00-ST15	**BIS00N1**	105
BIS M-6000-007-050-00-ST24	**BIS00J0**	105
BIS M-6002-019-050-03-ST11	**BIS00EW**	107
BIS M-6003-025-050-03-ST12	**BIS00EY**	109
BIS M-6008-048-050-06-ST23	**BIS00L7**	112
BIS M-6022-019-050-03-ST14	**BIS00F0**	107
BIS M-6023-025-050-03-ST13	**BIS00F1**	109
BIS M-6026-034-050-06-ST19	**BIS00F2**	110
BIS M-6028-048-050-06-ST22	**BIS00KZ**	113
BIS M-6028-048-050-06-ST28	**BIS00TW**	113
BIS M-620-067-A01-04-ST30	**BIS00ZK**	95
BIS M-620-068-A01-00-ST29	**BIS00ZH**	95
BIS M-626-069-A01-06-ST32	**BIS00ZA**	95
BIS M-688-001	**BIS00HM**	114
BIS M-688-002	**BIS00RY**	114
BIS M-699-052-050-03-ST11	**BIS00LY**	115
BIS M-870-1-008-X-000-3000	**BAE00HT**	121
BIS M-870-1-008-X-000-3001	**BAE00HU**	123
BIS M-870-1-008-X-000-3002		125
BIS M-870-1-008-X-001-3000		121
BIS M-870-1-008-X-001-3001		123
BIS M-870-1-008-X-001-3002		125
BIS M-870-1-008-X-002-3000		121
BIS M-870-1-008-X-002-3001		123
BIS M-870-1-008-X-002-3002		125
BIS M-870-1-008-X-003-3000		121
BIS M-870-1-008-X-003-3001		123
BIS M-870-1-008-X-003-3002		125
BIS M-870-1-008-X-004-3000		121
BIS M-870-1-008-X-004-3001		123
BIS M-870-1-008-X-004-3002	**BAE00JW**	125
BIS M-870-1-008-X-005-3000	**BAE00HL**	121
BIS M-870-1-008-X-005-3001		123
BIS M-870-1-008-X-005-3002	**BAE00HR**	125
BIS M-871-1-008-X-000-3000	**BAE00L2**	121
BIS M-871-1-008-X-000-3001	**BAE00K0**	123
BIS M-871-1-008-X-000-3002		125
BIS M-871-1-008-X-001-3000		121
BIS M-871-1-008-X-001-3001		123
BIS M-871-1-008-X-001-3002		125
BIS M-871-1-008-X-002-3000		121
BIS M-871-1-008-X-002-3001		123
BIS M-871-1-008-X-002-3002		125
BIS M-871-1-008-X-003-3000		121
BIS M-871-1-008-X-003-3001		123
BIS M-871-1-008-X-003-3002		125
BIS M-871-1-008-X-004-3000		121
BIS M-871-1-008-X-004-3001		123
BIS M-871-1-008-X-004-3002		125
BIS M-871-1-008-X-005-3000	**BAE00HM**	121
BIS M-871-1-008-X-005-3001		123
BIS M-871-1-008-X-005-3002		125
BIS M-873-1-008-X-000-3000	**BAE00HY**	121
BIS M-873-1-008-X-000-3001	**BAE00L1**	123
BIS M-873-1-008-X-000-3002	**BAE00HJ**	125
BIS M-873-1-008-X-001-3000		121
BIS M-873-1-008-X-001-3001	**BAE00L0**	123
BIS M-873-1-008-X-001-3002	**BAE00J7**	125
BIS M-873-1-008-X-002-3000		121
BIS M-873-1-008-X-002-3001		123
BIS M-873-1-008-X-002-3002		125
BIS M-873-1-008-X-003-3000		121
BIS M-873-1-008-X-003-3001		123
BIS M-873-1-008-X-003-3002		125
BIS M-873-1-008-X-004-3000		121
BIS M-873-1-008-X-004-3001		123
BIS M-873-1-008-X-004-3002		125
BIS M-873-1-008-X-005-3000	**BAE00HP**	121
BIS M-873-1-008-X-005-3001		123
BIS M-873-1-008-X-005-3002	**BAE00HK**	125
BIS M-874-1-008-X-000-3000	**BAE00J2**	121
BIS M-874-1-008-X-000-3001	**BAE00J3**	123
BIS M-874-1-008-X-000-3002	**BAE00J**	125
BIS M-874-1-008-X-001-3000		121
BIS M-874-1-008-X-001-3001		123
BIS M-874-1-008-X-001-3002	**BAE00JU**	125
BIS M-874-1-008-X-002-3000		121
BIS M-874-1-008-X-002-3001		123
BIS M-874-1-008-X-002-3002		125
BIS M-874-1-008-X-003-3000		121
BIS M-874-1-008-X-003-3001		123
BIS M-874-1-008-X-003-3002		125
BIS M-874-1-008-X-004-3000		121
BIS M-874-1-008-X-004-3001		123
BIS M-874-1-008-X-004-3002		125
BIS M-874-1-008-X-005-3000		121
BIS M-874-1-008-X-005-3001		123
BIS M-874-1-008-X-005-3002	**BAE00HN**	125
BIS S-108_ _		253
BIS S-108-32/L	**BIS004J**	242
BIS S-108-42/L	**BIS004K**	242
BIS S-108-52/L	**BIS004L**	242
BIS S-150_ _		253
BIS S-150-42/A	**BIS004N**	243
BIS S-150-52/A	**BIS004P**	243
BIS S-301-S115	**BIS005F**	245

Index sorted by part number

Part Description	Order Code	Page
BIS S-302-S115	**BIS005R**	245
BIS S-303-S115	**BIS005T**	245
BIS S-6002-019-050-03-ST11	**BIS00F3**	247
BIS S-6003-025-050-03-ST12	**BIS00F4**	249
BIS S-6022-019-050-03-ST14	**BIS00F5**	247
BIS S-6023-025-050-03-ST13	**BIS00F6**	249
BIS S-6026-034-050-06-ST19	**BIS00F7**	250
BIS S-6027-039-050-06-ST19	**BIS00F8**	251
BIS S-850	**BAE0098**	253
BIS U-100-01/CA	**BIS00NL**	20
BIS U-100-02/CA	**BIS00RC**	20
BIS U-101-04/CA	**BIS00WH**	21
BIS U-101-04/CA-HT	**BIS00WF**	21
BIS U-102-05/CA	**BIS00WE**	21
BIS U-102-05/CA-HT	**BIS00WC**	21
BIS U-301-C0-TNCB	**BIS00P0**	22
BIS U-301-C1-TNCB	**BIS00TY**	23
BIS U-302-C0-TNCB	**BIS00TZ**	23
BIS U-302-C1-TNCB	**BIS00U0**	23
BIS U-500-EF-01	**BAM01HL**	275
BIS U-500-EF-02	**BAM01HM**	275
BIS U-500-EF-05	**BAM01HN**	275
BIS U-500-EF-10	**BAM01HP**	275
BIS U-6020-053-104-00-ST26	**BIS00M7**	27
BIS U-6020-059-114-00-ST26	**BIS00R2**	27
BIS U-6020-059-134-00-ST26	**BIS00UM**	27
BIS U-6027-054-104-06-ST27	**BIS00NA**	27
BIS U-6027-060-114-06-ST27	**BIS00R1**	27
BIS U-6027-060-134-06-ST27	**BIS00UN**	27
BIS U-6028-048-104-06-ST28	**BIS00ZU**	27
BIS U-6028-048-114-06-ST28	**BIS00ZW**	27
BIS U-620-067-101-04-ST30	**BIS00Z8**	25
BIS U-620-067-111-04-ST30	**BIS00Z6**	25
BIS U-620-068-101-00-ST29	**BIS00Z4**	25
BIS U-620-068-111-00-ST29	**BIS00Z2**	25
BIS U-626-069-101-06-ST32	**BIS00Z0**	25
BIS U-626-069-111-06-ST32	**BIS00YY**	25
BIS U-870-1-008-X-000	**BAE00EE**	29
BIS U-870-1-008-X-000-1-3000	**BAE00L5**	29
BIS U-870-1-008-X-001	**BAE00J8**	29
BIS U-870-1-008-X-001-1-3000	**BAE00L6**	29
BIS V-6102-019-C001	**BIS00T3**	117, 173, 303
BIS V-6106-034-C004	**BIS0122**	117, 173
BIS V-6110-063-C002	**BIS00U9**	117, 173
BIS V-6111-073-C003	**BIS010P**	117, 173
BIS VL-300-001-S4	**BIS00UL**	142
BIS VL-301-001-S4	**BIS00U6**	145
BIS VL-302-001-S4	**BIS00UF**	148
BIS VL-304-001-S4	**BIS00UH**	150
BIS VL-306-001-S4	**BIS00UJ**	151
BIS VL-350-001-S4	**BIS00UK**	153
BIS VM-300-001-S4	**BIS00RF**	62
BIS VM-301-001-S4	**BIS00T0**	69
BIS VM-305-001-S4	**BIS00T9**	87

Part Description	Order Code	Page
BIS VM-306-001-S4	**BIS00T7**	85
BIS VM-307-001-S4	**BIS00T8**	85
BIS VM-341-001-S4	**BIS00TA**	73
BIS VM-351-001-S4	**BIS00T2**	71
BIS VM-352-001-S4	**BIS00T6**	87
BIS Z-501-PU1-_ _/E		284
BIS Z-501-PU1-_ _/M		285
BIS Z-502-PU1-_ _/E		284
BIS Z-502-PU1-_ _/M		285
BIS Z-AK-001-PU1-03	**BCC00T2**	326
BIS Z-EL-001-Ethernet	**BAE003U**	175
BIS Z-EL-002-RS232	**BAE003W**	175
BIS Z-GW-001-IND	**BAE00JJ**	119
BIS Z-GW-001-PBS	**BAE00JK**	119
BIS Z-GW-001-RS232	**BAE00JL**	119
BIS Z-GW-001-TCP	**BAE00JM**	119
BIS Z-HG-002	**BAM012J**	326
BIS Z-HG-003	**BAM012K**	326
BIS Z-HW-001	**BAM012L**	321
BIS Z-HW-003	**BAM01JK**	318
BIS Z-HW-004	**BAM01KN**	316
BIS Z-HW-005	**BAM01YK**	317
BIS Z-SP-001	**BAM018M**	325
BIS Z-SP-003	**BAM01LW**	317
BIS Z-ZA-001	**BAM012N**	129, 179
BIS-C-522-PVC-02		275
BKS		
BKS-23-CS-00	**BAM012P**	291
BKS-7/8-CS-00-A	**BAM012T**	295
BKS-S 45-00	**BCC011M**	289
BKS-S 46-00	**BCC011N**	289
BKS-S 52-00	**BCC00T6**	289
BKS-S 79-00	**BCC00T8**	175
BKS-S115-PU-_ _		283
BKS-S115-TW2-03	**BCC00TK**	175
BKS-S116-PU-_ _		283
BKS-S117-00	**BCC00TL**	285
BKS-S117-R01	**BCC00TM**	175
BMS		
BMS CC-M-D12-B-00	**BAM002Z**	319
BMS CS-M-D12-IZ	**BAM0031**	318
BMS CS-M-S25-DX15-00	**BAM01YP**	331
BMS CUJ-M-S25-D045-00	**BAM01YT**	331
BMS CU-M-D12-A040-00	**BAM002W**	319
BMS RS-M-D12-0150-00	**BAM002R**	319
BNI		
BNI CCL-502-100-Z001	**BNI0040**	303
BNI DNT-502-100-Z001	**BNI005A**	302
BNI ECT-508-105-Z015	**BNI0077**	302
BNI EIP-502-105-Z015	**BNI004A**	302
BNI EIP-508-105-Z015	**BNI006A**	302

Part Description	Order Code	Page
BNI EIP-950-000-Z009	**BNI000F**	312
BNI PBS-502-001-Z001	**BNI003K**	302
BNI PBS-502-101-Z001	**BNI005R**	303
BNI PBS-504-001-K008	**BNI0030**	303
BNI PBS-507-001-Z011	**BNI003P**	303
BNI PNT-502-105-Z015	**BNI004U**	302
BNI PNT-508-105-Z015	**BNI005H**	302
BNI TCP-951-000-E028	**BNI005E**	313
BNI TCP-952-000-E029	**BNI0067**	313
BVS		
BVS ID-3-001-E	**BVS0001**	265
BVS ID-3-003-E	**BVS000T**	265
BVS ID-3-005-E	**BVS001R**	265
BVS ID-3-101-E	**BVS0019**	265
BVS ID-3-103-E	**BVS001A**	265
BVS ID-3-105-E	**BVS001C**	265
BVS OI-3-001-E	**BVS0003**	267
BVS OI-3-002-E	**BVS0004**	267
BVS OI-3-003-E	**BVS0005**	267
BVS OI-3-004-E	**BVS0006**	267
BVS OI-3-005-E	**BVS000E**	267
BVS OI-3-006-E	**BVS000C**	267
BVS OI-3-101-E	**BVS0014**	267
BVS OI-3-103-E	**BVS0012**	267
BVS OI-3-105-E	**BVS0013**	267
BVS UR-3-001-E	**BVS001M**	269
BVS UR-3-003-E	**BVS001N**	269
BVS UR-3-005-E	**BVS001L**	269
BVS UR-3-101-E	**BVS001H**	269
BVS UR-3-103-E	**BVS001J**	269
BVS UR-3-105-E	**BVS001F**	269
BVS Z-MB-01	**BAM00WN**	328

FAN

Services

Customized. According to your specifications. With Balluff quality.

We give you comprehensive service over the entire life cycle of our products: including the conception and planning of your projects, testing and setup on site, and training and support. For an optimal implementation.

This creates the greatest possible planning security and provides faster commissioning and an earlier start of production. This leads to maximum productivity and more cost-effectiveness. And you are relieved of day-to-day tasks, so that more time remains for your really important jobs. Explore all the services Balluff has available.

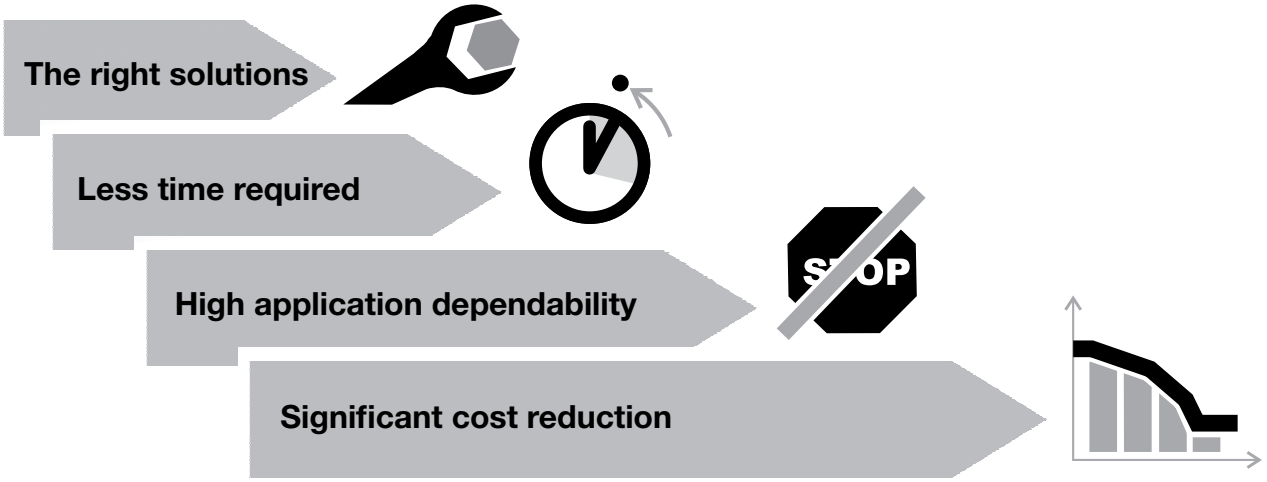

Application advice through our Tech Support: Discuss your technical requirements. And take advantage of our expertise.	**Real-world examples:** ■ Selection of the correct identification procedure for an assembly line ■ IO-Link concept as a cost-effective alternative to conventional wiring ■ System consulting for radio frequency identification (RFID): identification in adverse environments ■ Recognizing multiple containers on a pallet in goods
Commissioning: Order expert knowledge. And benefit from a quick start of production.	**Real-world examples:** ■ Setting up an optical checkpoint with the BVS vision sensor ■ Consulting and support during the programming of BIS RFID systems ■ Installation and commissioning of a color detection application with the BFS color sensor
Fully customized products: Order individual versions according to your requirements: from preassembly to engineering services. And take advantage of the optimum.	**Real-world examples:** ■ Extending the housing of a BHS high-pressure resistant inductive sensor ■ Extra threads for the housing cover of a BTL micropulse travel sensor ■ Customer-specific holder for a RFID data carrier ■ Adaptation of the characteristics for BAW analog sensors
Workshops: Make use of well-founded manufacturer knowledge. And benefit from application security.	■ **Professional sensor use:** Select effective principles, install sensors professionally and secure the reliable operation of your application ■ **RFID:** The right data at the right time at the right place ■ **Vision sensor:** Using an image processing sensor, ensure manufacturing quality in three steps ■ **Vision sensor ident:** Reliably identify data matrix codes with an image processing sensor ■ **Industrial networking with IO-Link:** Manage signals intelligently and cost-effectively

DMC 635 V ecoline

Tool identification with Industrial RFID

Identify tools with Industrial RFID. And guarantee reliable productivity.

Tool identification using Industrial RFID means incorrect data or missing tools are a thing of the past. Our systems provide complete tool data with extreme reliability and guarantee assured operation as well as increased productivity of the machine.

Capable of integration into most commonly used machine controls, our Industrial RFID systems ensure flexible and reliable communication in tool management. Absolutely without contact and maintenance-free. Tools are always accompanied by their individual data so they can be optimally used and managed.

The benefits to you

- Reduce set-up time through quick and precise tool identification
- Electronic data transmission and paperless tool information
- Quality assurance through error prevention
- Service life control outside of the machine
- Optimal tool utilization

The system

Balluff Industrial RFID stands for flexible, secure, contactless communication. The systems are entirely tolerant of environmental influences on account of their inductive operating principle. Therefore, they are excellently suited for use in harsh industrial environments such as the machine tool. Our systems therefore provide complete tool data robustly and reliably and ensure reliable identification. Balluff Tool ID supports process reliability.

Contact your Balluff sales person or machine provider for more information on how to put Tool ID to use for you.

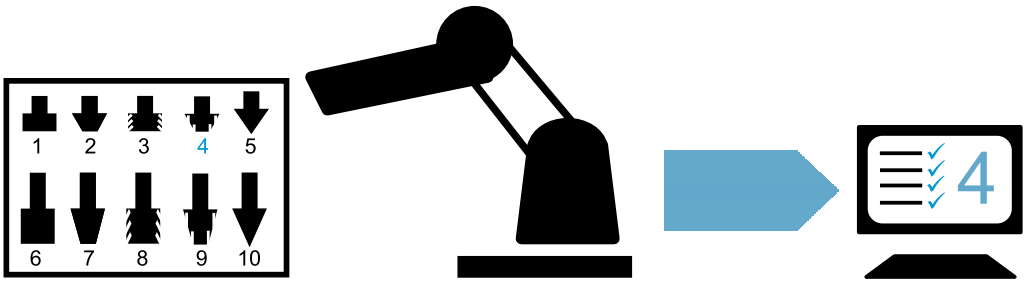

Machine Tool ID Retrofit – Retrofitting from a single source

Retrofit your machine facilities. And increase operating uptime and profit.

Machine Tool ID Retrofit is a complete solution to retrofit tool identification on existing CNC machines. This all-around package with an Industrial RFID system provides the optimal interface between the presetting device and the machine control system. It is ideal for all common technologies.* Each solution is tailored to your individual requirements.

Balluff Tool ID Retrofit guarantees optimal tool utilization in state-of-the-art production and ensures higher machine availability because each tool can be reliably identified, traced, and managed. This guarantees maximum usability and provides the best possible value creation. Take advantage of the benefits of perfect tool identification.

*The system can be implemented into many common control systems, such as those from FANUC, Heidenhain, or Mazak. If you work with a different control provider, please contact us.

Systems and customized solutions

In-depth manufacturer expertise provides optimized systems. Our project management guarantees successful solutions.

Professional project management is available at Balluff for implementing systems. As a result, we offer customized solutions that are tailored to meet your needs. This guarantees the most workable and efficient applications.

We assemble solutions specifically for your application with our systems. In addition, you can receive custom software for mobile and stationary communication. This is the way to employ well-founded manufacturer expertise.

We provide perfect integration to fit your needs, because we handle installation and startup as well as adjustments on site. This increases both productivity and efficiency.

Contact your local Balluff sales representative to learn about our customized solutions in detail.

Utilizing targeted manufacturer expertise

Example of a customized solution with Tool ID

Products
RFID reader, antenna, data carrier and power supply

System
- Hardware – Base, control cabinet, panel PC and accessories
- Visualization – Preparing (software) read data and displaying it on the monitor
- Intelligence – Communicating with the machine control system, converting the RFID log into the machine language

Solution
- Installation – Fastening the base to the ground or machine, securing the supply of electrical power (pulling cables, etc.)
- Startup and adjusting – Establishing communication with the machine, adjusting the interface to the customer's data mapping, adjusting the visualization to customer requests (configuration) and similar actions down to individualized training for the system used by the customer
- Coordination – Determining, ordering and coordinating third-party companies, e.g. installation companies or machine manufacturers; coordinating installation and startup after consulting with the customer, etc.

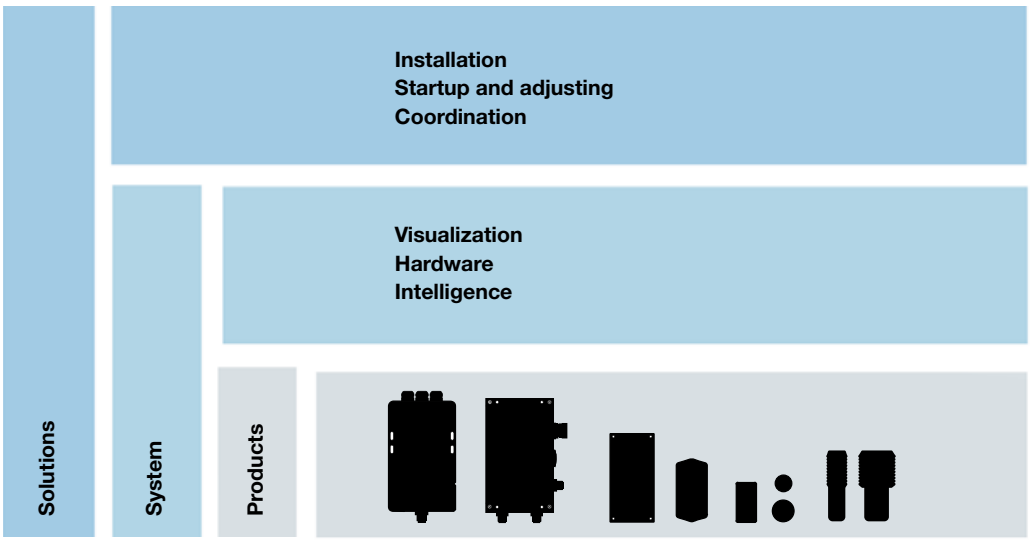

TechSupport – Added value for planning and commissioning

We offer ...
- Decision help for the correct product selection
- Complex product and application support
- Integration support
- Customer-specific product and commissioning training
- Intensive technical support during the entire phase of the project

We provide you with specific support for Balluff system components
- Vision sensors BVS for optical identification
- Industrial networking and connectivity for wiring and networking
- IO-Link – network technology for reliable data transfer and greater efficiency
- Industrial identification – RFID for transparency in material flow

We are happy to help!

Phone 1-800-543-8390
E-mail Technical.Support@balluff.com

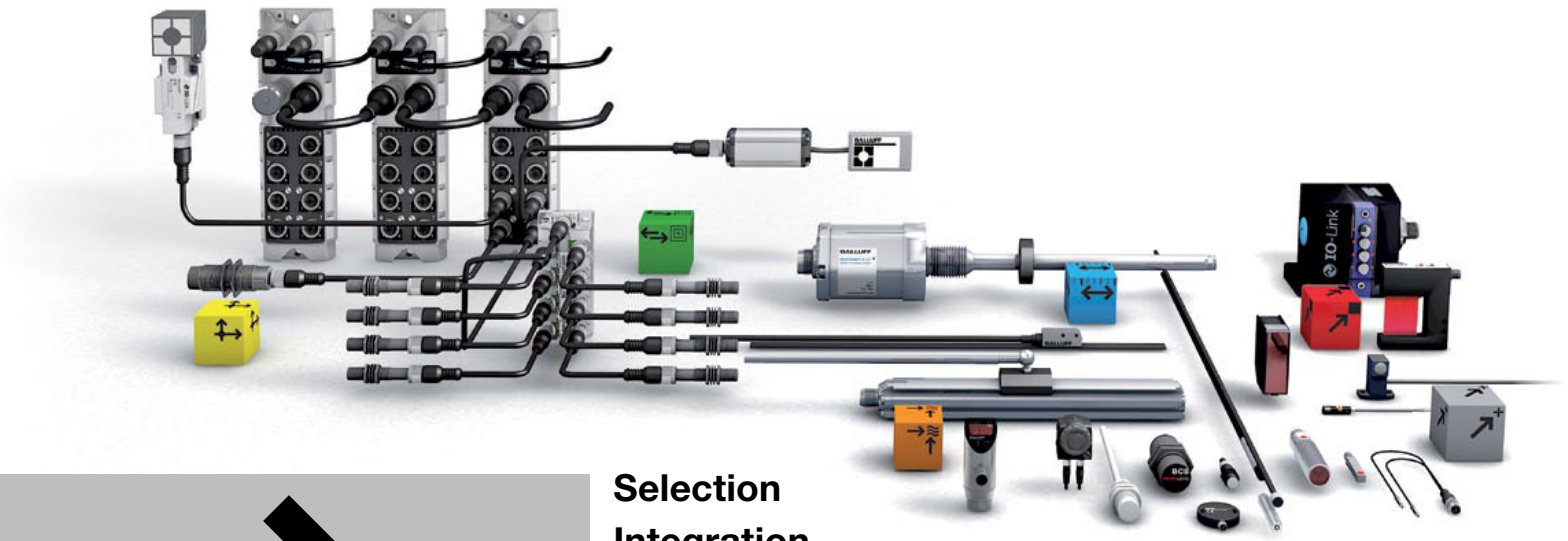

Selection
Integration
Instruction
Application
Industrial Identification
Project support
Vision sensors
IO-Link
Industrial Networking and Connectivity
Product
System components
Decision help

BALLUFF

sensors worldwide

SENSOR SOLUTIONS AND SYSTEMS

For all areas of the automation industry

As a global player, we stand for comprehensive system expertise, continuous innovation, the highest quality and the greatest reliability. Balluff means technological variety and first-class service. Our 2450 worldwide employees are working to ensure this.

Systems and Service

Industrial Networking and Connectivity

Industrial Identification

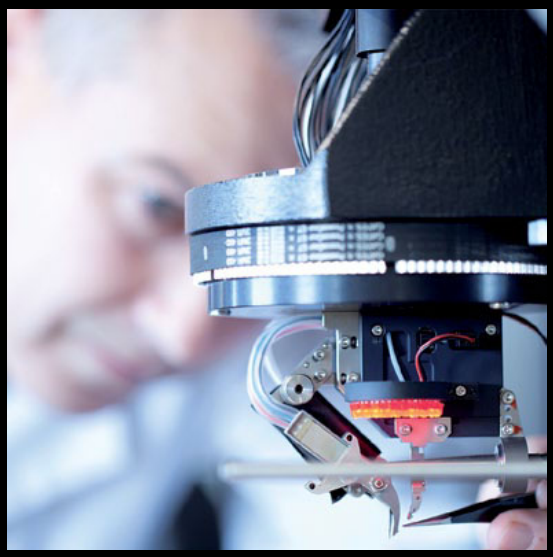

Object Detection

Linear Position Sensing and Measurement

Fluid Sensors

Accessories

www.balluff.com
Phone 1-800-543-8390

BALLUFF

sensors worldwide

- Systems and Service
- Industrial Networking and Connectivity
- Industrial Identification
- Object Detection
- Linear Position Sensing and Measurement
- Fluid Sensors
- Accessories

USA
Balluff Inc.
8125 Holton Drive
Florence, KY 41042
Phone: (859) 727-2200
Toll-free: 1-800-543-8390
Fax: (859) 727-4823
E-Mail: balluff@balluff.com

Canada
Balluff Canada, Inc.
2840 Argentia Road, Unit #2
Mississauga, Ontario L5N 8G4
Phone: (905) 816-1494
Toll-free: 1-800-927-9654
Fax: (905) 816-1411
E-Mail: balluff.canada@balluff.ca

Mexico
Balluff de México SA de CV
Anillo Vial II Fray Junípero Serra No. 4416
Colonia La Vista Residencial.
Querétaro, Qro. CP76232
Phone: (++52 442) 212-4882
Fax: (++52 442) 214-0536
E-Mail: balluff.mexico@balluff.com

www.balluff.com

Doc. No. 898983/Mat No. 234332 EN
I13; Product specifications, availability,
and pricing are subject to change without notice.